REGULAR CITY COUNCIL MEETING
CITY COUNCIL CHAMBERS – CITY HALL
#1 CITY HALL PLACE

MONDAY, NOVEMBER 11, 2024
7:00 PM

Individuals Requiring Special Accommodations Should Notify the City's ADA Coordinator at (719) 553-2295 by Noon on the Friday Preceding the Meeting.

A. CALL TO ORDER
President Mark Aliff

B. INVOCATION
Pastor Ken Wood, The Avenue Church

C. PLEDGE OF ALLEGIANCE

D. ROLL CALL

E. SPECIAL RECOGNITIONS

E1 Proclamation Presentation: "Law Enforcement Records Personnel Week - November 4-8, 2024" - Jenna Ingo, Records Manager & Pueblo Police Department Records Division Staff

E2 Proclamation Presentation: "Pueblo Crash Responder Safety Week - November 18-22, 2024" - Andrew Hayes, Director of Public Works; Chris Noeller, Police Chief; Keith Novak, Deputy Fire Chief

F. PUBLIC FORUM

G. COUNCIL MEMBER AND MAYOR COMMENTARY

H. REVIEW OF AGENDA

I. APPROVAL OF AGENDA

Motion to Amend the Agenda or Motion to Approve the Agenda as distributed.

J. READING AND APPROVAL OF MINUTES

Motion to dispense with the reading and approve the Minutes of the Regular Meeting dated October 28, 2024, as distributed.

J1 City Council Minutes 10/28/2024

K. CONSENT AGENDA

All items listed in this portion of the agenda are considered to be routine by the City Council and will be enacted by one motion. There will be no separate discussion of these items unless a Councilperson so requests; in which event, the item will be removed from the Consent Agenda and considered under the Regular Agenda. Unless otherwise indicated, titles are self-explanatory.

L. COMMUNICATIONS

M. RESOLUTIONS

M1 A Resolution awarding an agreement for Professional Consulting Services in the amount of $400,000 to DiExSys, LLC., a Colorado Limited Liability Company, for Project No. 24-012 Consultant for Pueblo Area Comprehensive Safety Action Plan and authorizing the Purchasing Agent to execute same

M2 A Resolution approving Amendment No. 1 to the agreement for additional professional consulting services between the City of Pueblo, a Colorado Municipal Corporation, and Brown and Caldwell, Inc., in the amount of $160,874 for Project No. 18-087 Wastewater Department Engineer of Record – Stockyard Road 60- and 66-inch Pipeline CIPP Rehabilitation, and authorizing the Purchasing Agent to execute the same

M3 A Resolution approving an agreement in the amount of $149,500 to Confluence, Inc., for Design Services and setting forth $25,500 in contingency for the Master Plan for City Park and Arkansas River Corridor Project, and authorizing the Purchasing Agent to execute the same

M4 A Resolution awarding a construction contract in the amount of $136,693.50 to Doug Vaughn, LLC for Project No. 24-096, ADA Curb Ramps - Phase 2 (CDBG), setting forth $60,000.00 for contingencies, and authorizing the Purchasing Agent to execute same

M5 A Resolution establishing Project Account SR2401 - Street Repair Utility Rate Study, transferring $50,000.00 from Project Account SRAN01 - Annual Street Rehabilitation to Project Account SR2401 - Street Repair Utility Rate Study, and budgeting and appropriating $50,000 to Project Account SR2401 - Street Repair Utility Rate Study, awarding an agreement for Professional Consulting Services in the amount of $44,999 to Raftelis Financial Consultants, Inc., a North Carolina corporation authorized to do business in Colorado, for Project No. 24a-052 Street Repair Utility Enterprise Rate Study and authorizing the Purchasing Agent to execute same

M6 A Resolution authorizing the transfer of previously budgeted and appropriated funds in the amount of $35,788.15 from project account WW9999 to WW2305 and approving and authorizing the Purchasing Agent to execute Amendment No. 1 of the Agreement for Professional Engineering services between the City of Pueblo, a Colorado Municipal Corporation, and Short-Elliott-Hendrickson, Inc., in the amount of $35,788.15 for 23-046, Design of Future Wastewater Pretreatment Building.

M7 A Resolution awarding a construction contract in the amount of $26,830 to Cedar Ridge Landscape, Inc., for Project No. 24-130, Bradford Park - Basketball Court Concrete and Fencing Improvements (CDBG), setting forth $5,000 for contingencies, and authorizing the Purchasing Agent to execute same

M8 A Resolution authorizing the issuance of a Revocable Permit (REV-24-38) to the YMCA of Pueblo for the use of one lane of Spaulding Avenue and one lane of Parker Blvd. for their 2024 YMCA Turkey Trot on Thanksgiving Day

M9 A Resolution transferring $10,489 from WW9999 to WW2404, for Project No. 24-103 (WW2404) Pueblo Raptor Center Onsite Water Treatment System Repair Project.

M10 A Resolution approving an Easement Agreement for a portion of Tract C of Lake Minnequa Reservation between the City of Pueblo, a Colorado Municipal Corporation, and Black Hills Energy for the installation of above ground cabinets and underground service lines along Lakeview Avenue

M11 A Resolution authorizing the issuance of a revocable permit (REV-24-34) to BIF IV Intrepid

Opco., LLC., for the purpose of allowing an authorized structure to be within the permitted area until termination or revocation of this revocable permit for use of the existing W. 18th Street bridge between Atlanta Ave. and Hooper Ave., Pueblo, CO

M12 A Resolution ratifying PACOG's joint appointment of Lyndsey Caldwell to the Community Services Advisory Commission (CSAC)

M13 A Resolution ratifying PACOG's joint appointment of Amy Hurtig-Smith to the Building Board of Appeals - Architect Position

M14 A Resolution ratifying PACOG's joint appointment of Adelia "Dawn" Tripp-Sena to the Pueblo Human Relations Commission

M15 A Resolution adopting and approving the 2025 Standard Construction Specifications and Standard Details for the City of Pueblo, Colorado

M16 A Resolution confirming the appointment by the Mayor of Crystal Estrada and Corinne Koehler to complete a five-year term on the Pueblo Urban Renewal Authority of the City of Pueblo

M17 A Resolution approving payment in the amount of $80,000 from Project Account CI2113 - American Rescue Plan Act for City-wide Trash Removal Projects as authorized by Section 603(C)(1)(C) of the American Rescue Plan Act and U.S. Treasury Final Rule 31 CFR §35.6

N. ORDINANCES – FIRST PRESENTATION

N1 An Ordinance levying and certifying the City of Pueblo property tax mill levy made in 2024 for the 2025 budget year

N2 An Ordinance making appropriation for the general fund, special revenue funds, enterprise funds, internal service funds, debt service funds, and capital project funds for the fiscal year 2025 and adopting the budget for the year 2025

N3 An Ordinance levying and certifying the Bandera Boulevard Special Improvement Maintenance District property tax mill levy made in 2024 for the 2025 budget year

N4 An Ordinance levying and certifying the Southpointe Special Improvement Maintenance District property tax mill levy made in 2024 for the 2025 budget year

N5 An Ordinance establishing Project PS2410, the Real Time Crime Center Project, transferring $1,000,000 from 10120502-51040 to PS2410, budgeting and appropriating funds in the amount of $1,000,000 and authorizing Mayor Graham to execute same

N6 An Ordinance approving an agreement between Axon Enterprise, Inc., a Delaware Corporation, and the City of Pueblo, a Colorado Municipal Corporation, for the continuation of video storage services and purchase of new body worn camera hardware and related services and accessories, and authorizing Mayor Graham to execute same

N7 An Ordinance approving and authorizing the Mayor to sign a Memorandum of Understanding by and between the City of Pueblo, a Colorado Municipal Corporation, Pueblo Urban Renewal Authority, a body corporate and politic of the State of Colorado, Pueblo School District 60, and Pueblo Central High School Foundation, a Colorado nonprofit corporation, for the construction of a soccer practice field as authorized by Section 603 of the American Rescue Plan Act and U.S. Treasury Final Rule 31 CFR 35.6, and authorizing the payment of two hundred and fifty thousand dollars ($250,000) from Project No. CI2113 - American Rescue Plan Act, for purposes thereof

N8 An Ordinance repealing Section 3, 4, 5 and 6 of Chapter 2 of Title IX and certain sections

of the Pueblo Municipal Code relating to Cabaret Licenses

N9 An Ordinance creating 11-1-612 of the Pueblo Municipal Code creating the criminal consequences for misuse of natural medicines

O. APPROVAL OF CONSENT AGENDA

I move to approve all Resolutions Set Forth in the Consent Agenda; Pass the Ordinances of the Consent Agenda, Setting the Public Hearings for November 25, 2024, and Order the Ordinances to be published BY TITLE.

P. REGULAR AGENDA

Q. RESOLUTIONS

Q1 A Resolution authorizing payment from the Council Contingencies account in the 2024 general fund budget to Historic Pueblo, Inc. in the amount of $1,000 to sponsor the Damon Days Banquet at the Union Depot on Friday, February 7, 2025

R. ORDINANCES – FINAL PRESENTATION

R1 An Ordinance adding Section 304 of Chapter 1 of Title XI of the Pueblo Municipal Code adding the offense of Interference with a City Employee - *Introduced October 28, 2024 by Councilor Regina Maestri*

R2 An Ordinance amending Sections 402 and 403 of Chapter 1 of Title XI of the Pueblo Municipal Code amending the class of offense for damaging, defacing or destruction of property and amending the class level for said offenses. - *Introduced October 28, 2024 by Councilor Regina Maestri*

S. QUASI-JUDICIAL PROCEEDINGS

S1 An Ordinance amending zoning restrictions to Rezone 2.39-Acres from I-3, Heavy Industrial Zone District; S-1, Government Use Zone District; and S-3, Flood Plain District Zone District to I-3, Heavy Industrial Zone District and to Rezone 2.72-Acres from S-1, Government Use Zone District to I-2, Industrial Zone District - *Introduced October 28, 2024 by Councilor Regina Maestri*

T. ADJOURN

REGULAR CITY COUNCIL MEETING
CITY COUNCIL CHAMBERS – CITY HALL
#1 CITY HALL PLACE
MONDAY, OCTOBER 28, 2024 - 7:00 PM

MINUTES

A. CALL TO ORDER

President Aliff called the meeting to order at 7:08 p.m.

B. INVOCATION

C. PLEDGE OF ALLEGIANCE

D. ROLL CALL

Council Members Present: Mark Aliff, Brett Boston, Dennis Flores, Roger Gomez, Joe Latino, Regina Maestri, Sarah Martinez.

Council Members Present via Zoom: None.

Council Members Absent: None.

Administrative Staff Members Present: Mayor Heather Graham, Chief of Staff Brian McCain, City Attorney Carla Sikes, City Clerk Marisa Stoller.

E. SPECIAL RECOGNITIONS

E1 PROCLAMATION PRESENTATION: "CODE COMPLIANCE MONTH - OCTOBER 2024" - KAREN WILLSON, CODE ENFORCEMENT MANAGER & CODE ENFORCEMENT DIVISION STAFF

E2 PROCLAMATION PRESENTATION: “PUEBLO WATER DAY: 150TH ANNIVERSARY - OCTOBER 31, 2024" - SETH CLAYTON, EXECUTIVE DIRECTOR OF PUEBLO WATER

F. PUBLIC FORUM

- Ted Freeman - Economics
- Sara Short - Abortion Ordinance
- Catherine Castillo - Abortion
- Kristine Orr - Abortion

- Coza Mendoza - Nonprofit budget cuts
- Margo Harriman - Election

G. COUNCIL MEMBER AND MAYOR COMMENTARY

Mayor Graham reminded the community about the Black Hills rate hike meeting tomorrow and Wednesday, 5-8pm at City Hall. Saturday night was a great night for Halloween and families at the Riverwalk. Thank you to everyone who came to help during the Team up to Clean Up! It was very successful. Cleanup of the Jungle has started with a work plan from the EPA; tonight there is an emergency ordinance for the shelter for the Mayor to declare an emergency so they can have beds if they wish.

Council members expressed comments regarding community-related issues and events/functions they attended.

H. REVIEW OF AGENDA

The agenda was reviewed page by page.

I. APPROVAL OF AGENDA

Councilor Maestri, seconded by Councilor Flores, moved to approve the agenda as distributed.

Roll Call - **Ayes:** President Aliff, Councilor Boston, Councilor Flores, Councilor Gomez, Councilor Latino, Councilor Maestri, Councilor Martinez. **Nays:** None. Motion Passed 7-0.

J. READING AND APPROVAL OF MINUTES

J1 CITY COUNCIL MINUTES OCTOBER 15, 2024

Councilor Gomez, seconded by Councilor Maestri, moved to dispense with the reading and approve the Minutes of the Regular Meeting dated **October 15, 2024** as distributed.

Roll Call - **Ayes:** President Aliff, Councilor Boston, Councilor Flores, Councilor Gomez, Councilor Latino, Councilor Maestri, Councilor Martinez. **Nays:** None. Motion Passed 7-0.

K. PUBLIC HEARINGS

K1 PROPOSED 2025 ANNUAL BUDGET

THIS PUBLIC HEARING IS HELD FOR THE PURPOSE OF RECEIVING PUBLIC TESTIMONY AS IT PERTAINS TO THE 2025 PROPOSED ANNUAL BUDGET PER THE REQUIREMENTS OF SECTION 7-9 OF THE CHARTER FOR THE CITY OF PUEBLO. *REQUIRED COUNCIL ACTION:* OPEN THE HEARING, RECEIVE PUBLIC TESTIMONY, AND CLOSE THE HEARING. COUNCIL DISCUSSION IS NOT REQUIRED AND THERE IS NO COUNCIL ACTION AT THIS TIME.

- Ken Danti appeared in person to speak on the annual budget
- Noah Cummerford appeared in person to speak on the annual budget
- Dr. Nicole Ferguson appeared in person to speak on the annual budget
- Elvis Martinez appeared in person to speak on the annual budget
- Andy Sanchez appeared in person to speak on the annual budget
- Wendy Rapt appeared in person to speak on the annual budget
- Karen Vigil appeared in person to speak on the annual budget
- Eleonora Bartoli appeared in person to speak on the annual budget

- Jordan Eberhart appeared in person to speak on the annual budget
- Amber Don appeared in person to speak on the annual budget
- Chayla appeared in person to speak on the annual budget
- Brett Verna appeared in person to speak on the annual budget

L. CONSENT AGENDA

City Clerk Marisa Stoller read the Consent Agenda into the record.

M. RESOLUTIONS

M1 A RESOLUTION RATIFYING THE AWARD OF AN EMERGENCY CONSTRUCTION CONTRACT IN THE AMOUNT OF $143,275.00 TO MILLER PIPELINE LLC, AN INDIANA LIMITED LIABILITY COMPANY AUTHORIZED TO DO BUSINESS IN THE STATE OF COLORADO, FOR PROJECT NO. 23-040 (SWAN03) - FOR EMERGENCY STORM SEWER POINT REPAIR ON 14TH AND COURT AND APPROVING A CHANGE ORDER IN THE AMOUNT OF $23,415.00 FOR ADDITIONAL WORK AND MATERIALS, AND AUTHORIZING AND APPROVING THE PURCHASING AGENT'S EXECUTION OF THE SAME

This Resolution was assigned as **15799**.

M2 A RESOLUTION AWARDING A CONSTRUCTION CONTRACT IN THE AMOUNT OF $39,156.06 TO NUNEZ CONSTRUCTION, INC FOR PROJECT NO. 24-094, MITCHELL PARK SHELTER INSTALLATION, SETTING FORTH $7,831.21 FOR CONTINGENCIES, AND AUTHORIZING THE PURCHASING AGENT TO EXECUTE SAME

This Resolution was assigned as **15800**.

M3 A RESOLUTION RATIFYING THE AWARD OF AN EMERGENCY CONSTRUCTION CONTRACT IN THE AMOUNT OF $22,487.00 TO RUSS GRADING & EXCAVATING LLC, A COLORADO LIMITED LIABILITY COMPANY, FOR PROJECT NO. 23-040 (SWAN03) - FOR EMERGENCY STORM SEWER POINT REPAIR AT THE INTERSECTION OF EVANS AVENUE AND WASHINGTON STREET AND APPROVING A CHANGE ORDER IN THE AMOUNT OF $75,978.91 FOR ADDITIONAL WORK AND MATERIALS, AND AUTHORIZING AND APPROVING THE PURCHASING AGENT'S EXECUTION OF THE SAME

This Resolution was assigned as **15801**.

M4 A RESOLUTION ADOPTING THE 2024 PUEBLO COUNTY HAZARD MITIGATION PLAN

This Resolution was assigned as **15802**.

M5 A RESOLUTION TABLING FINAL ACTION ON THE PETITION FOR THE ANNEXATION AREA COMMONLY KNOWN AS THE PUEBLO RECREATION RESORT NO. 1 ANNEXATION FOR AN ADDITIONAL PERIOD OF NOT MORE THAN 180 DAYS.

This Resolution was assigned as **15803**.

M6 A RESOLUTION TABLING FINAL ACTION ON THE PETITION FOR THE

ANNEXATION OF THE AREA COMMONLY KNOWN AS THE PUEBLO RECREATION RESORT NO. 2 ANNEXATION FOR AN ADDITIONAL PERIOD OF NOT MORE THAN 180 DAYS

This Resolution was assigned as **15804**.

M7 A RESOLUTION CONFIRMING THE APPOINTMENT BY THE MAYOR OF ANNA JONES & JOE TREANOR TO COMPLETE A FOUR-YEAR TERM EXPIRING AUGUST 30, 2027, ON THE ADA ADVISORY COMMITTEE

This Resolution was assigned as **15805**.

N. ORDINANCES – FIRST PRESENTATION

N1 AN ORDINANCE ADDING SECTION 304 OF CHAPTER 1 OF TITLE XI OF THE PUEBLO MUNICIPAL CODE ADDING THE OFFENSE OF INTERFERENCE WITH A CITY EMPLOYEE

N2 AN ORDINANCE AMENDING SECTIONS 402 AND 403 OF CHAPTER 1 OF TITLE XI OF THE PUEBLO MUNICIPAL CODE AMENDING THE CLASS OF OFFENSE FOR DAMAGING, DEFACING OR DESTRUCTION OF PROPERTY AND AMENDING THE CLASS LEVEL FOR SAID OFFENSES.

N3 AN ORDINANCE AMENDING ZONING RESTRICTIONS TO REZONE 2.39-ACRES FROM I-3, HEAVY INDUSTRIAL ZONE DISTRICT; S-1, GOVERNMENT USE ZONE DISTRICT; AND S-3, FLOOD PLAIN DISTRICT ZONE DISTRICT TO I-3, HEAVY INDUSTRIAL ZONE DISTRICT AND TO REZONE 2.72-ACRES FROM S-1, GOVERNMENT USE ZONE DISTRICT TO I-2, INDUSTRIAL ZONE DISTRICT

O. APPROVAL OF CONSENT AGENDA

P. REGULAR AGENDA

Q. RESOLUTIONS

R. ORDINANCES – FINAL PRESENTATION

R1 AN ORDINANCE AMENDING PUEBLO MUNICIPAL CODE ON MARIJUANA, REVISING 11-10-103, 11-10-201 THROUGH 11-10-204, 11-10-505, 11-11-103, 11-11-201 THROUGH 11-11-204, AND 11-11-505

A staff report and detailed review of the Ordinance was given by Marisa Stoller, City Clerk.

PUBLIC HEARING:

Seeing no one wished to speak, President Aliff declared the hearing closed.

Councilor Boston, seconded by Councilor Latino, moved to approve the Ordinance on final

presentation.

Roll Call - **Ayes:** Councilor Boston, Councilor Flores, Councilor Latino, Councilor Maestri, Councilor Martinez. **Nays:** President Aliff, Councilor Gomez. Motion Passed 5-2.

This Ordinance was assigned as **10820.**

R2 AN ORDINANCE AMENDING PUEBLO MUNICIPAL CODE ON ALCOHOL BEVERAGES, REVISING 11-3-1 THROUGH 11-3-13, 11-3-15, 11-3-26, 11-3-41, 11-3-43 THROUGH 11-3-46, 11-3-50 THROUGH 11-3-52, 11-3-61 THROUGH 11-3-63, 11-3-72, AND 11-3-74 THROUGH 11-3-78

A staff report and detailed review of the Ordinance was given by Marisa Stoller, City Clerk.

PUBLIC HEARING:

Seeing no one wished to speak, President Aliff declared the hearing closed.

Councilor Maestri, seconded by Councilor Gomez, moved to approve the Ordinance on final presentation.

Roll Call - **Ayes:** Councilor Boston, Councilor Flores, Councilor Gomez, Councilor Latino, Councilor Maestri, Councilor Martinez. **Nays:** President Aliff. Motion Passed 6-1.

This Ordinance was assigned as **10821.**

R3 AN ORDINANCE APPROVING, ACCEPTING, AND BUDGETING A MULTIMODAL TRANSPORTATION AND MITIGATION OPTION FUNDS GRANT AWARD, AND APPLICABLE CONDITIONS PERTAINING THERETO, BETWEEN THE CITY OF PUEBLO, A COLORADO MUNICIPAL CORPORATION, THE PUEBLO AREA COUNCIL OF GOVERNMENTS, AND COLORADO DEPARTMENT OF TRANSPORTATION ESTABLISHING PROJECT NO. PT2303, BUDGETING AND APPROPRIATING $65,000.00, AND AUTHORIZING THE MAYOR TO EXECUTE SAME

A staff report and detailed review of the Ordinance was given by Ben Valdez, Director of Transit.

PUBLIC HEARING:

Seeing no one wished to speak, President Aliff declared the hearing closed.

Councilor Boston, seconded by Councilor Martinez, moved to approve the Ordinance on final presentation.

Roll Call - **Ayes:** President Aliff, Councilor Boston, Councilor Flores, Councilor Gomez, Councilor Latino, Councilor Maestri, Councilor Martinez. **Nays:** None. Motion Passed 7-0.

This Ordinance was assigned as **10822.**

R4 AN ORDINANCE AMENDING SECTION 14-4-76 OF THE PUEBLO MUNICIPAL CODE RELATING TO SALES TAX EXEMPTION WITH RESPECT TO OCCASIONAL SALES BY STATE QUALIFYING CHARITABLE ORGANIZATIONS AND INCREASING THE ANNUAL QUALIFYING AMOUNT FOR OCCASIONAL SALES TO MAKE CONSISTENT WITH STATE STATUTE

A staff report and detailed review of the Ordinance was given by Danny Nunn, Interim Director of Finance.

PUBLIC HEARING:

Seeing no one wished to speak, President Aliff declared the hearing closed.

Councilor Gomez, seconded by Councilor Flores, moved to approve the Ordinance on final presentation.

Roll Call - **Ayes:** President Aliff, Councilor Boston, Councilor Flores, Councilor Gomez, Councilor Latino, Councilor Maestri, Councilor Martinez. **Nays:** None. Motion Passed 7-0.

This Ordinance was assigned as **10823.**

R5 AN ORDINANCE AMENDING SECTION 14-4-76 OF THE PUEBLO MUNICIPAL CODE RELATING TO ESSENTIAL AND NONESSENTIAL ARTICLES FURNISHED IN CONNECTION WITH THE SALE OF TAXABLE FOOD AND MAKING SAME CONSISTENT WITH THE LAWS OF THE STATE OF COLORADO

A staff report and detailed review of the Ordinance was given by Danny Nunn, Interim Director of Finance.

PUBLIC HEARING:

Seeing no one wished to speak, President Aliff declared the hearing closed.

Councilor Gomez, seconded by Councilor Flores, moved to approve the Ordinance on final presentation.

Roll Call - **Ayes:** Councilor Flores, Councilor Martinez. **Nays:** President Aliff, Councilor Boston, Councilor Gomez, Councilor Latino, Councilor Maestri. Motion Failed 2-5.

R6 AN ORDINANCE ELECTING TO CERTIFY ABATEMENT ASSESSMENT ROLL NO. 2024-1 TO THE COUNTY TREASURER AND TO HAVE THE COUNTY TREASURER COLLECT IN THE SAME MANNER AS OTHER TAXES

A staff report and detailed review of the Ordinance was given by Lisa Machetto, Assistant City Attorney.

PUBLIC HEARING:

Seeing no one wished to speak, President Aliff declared the hearing closed.

Councilor Flores, seconded by Councilor Latino, moved to approve the Ordinance on final presentation.

Roll Call - **Ayes:** President Aliff, Councilor Boston, Councilor Flores, Councilor Gomez, Councilor Latino, Councilor Maestri, Councilor Martinez. **Nays:** None. Motion 7-0.

This Ordinance was assigned as **10824.**

R7 AN ORDINANCE APPROVING AN AGREEMENT AMENDING EMPLOYMENT

AGREEMENT DATED OCTOBER 9, 2018 BETWEEN KEY STRUCTURES, LLC, A COLORADO LIMITED LIABILITY COMPANY AND THE CITY OF PUEBLO, A COLORADO MUNICIPAL CORPORATION, ACCEPTING AN IRREVOCABLE LETTER OF CREDIT FROM FIRSTBANK ON BEHALF OF KEY STRUCTURES, LLC IN THE AMOUNT OF $1,225,414.71, AND APPROVING A SUBORDINATION AGREEMENT BY AND BETWEEN KEY STRUCTURES, LLC, A COLORADO LIMITED LIABILITY COMPANY, ABODA PUEBLO, LLC, A COLORADO LIMITED LIABILITY COMPANY, THE CITY OF PUEBLO, A COLORADO MUNICIPAL CORPORATION, AND THE COLORADO HOUSING AND FINANCE AUTHORITY (CHFA)

A staff report and detailed review of the Ordinance was given by Carla Sikes, City Attorney.

PUBLIC HEARING:

John Galen appeared in person and spoke in favor of this Ordinance.

Seeing no one else wishing to speak, President Aliff declared the hearing closed.

Councilor Boston, seconded by Councilor Flores, moved to approve the Ordinance on final presentation.

Roll Call - **Ayes:** President Aliff, Councilor Boston, Councilor Flores, Councilor Gomez, Councilor Latino, Councilor Maestri, Councilor Martinez. **Nays:** None. Motion Passed 7-0.

This Ordinance was assigned as **10825.**

S. QUASI-JUDICIAL PROCEEDINGS

S1 AN ORDINANCE APPROVING THE NORTH VISTA HIGHLANDS, FILING NO. 10 SUBDIVISION

A staff report and detailed review of the Ordinance was given by Scott Hobson, Acting Director of Planning & Community Development.

Mr. Hobson requested that the Planning & Zoning documents for this item, Case #S2402 dated: October 9th, 2024, be made part of the record for this hearing. So ordered by President Aliff.

PUBLIC HEARING:

Michael Guppy appeared in person and spoke in favor of this Ordinance.

Seeing no one else wishing to speak, President Aliff declared the hearing closed.

Councilor Latino, seconded by Councilor Boston, moved to approve the Ordinance on final presentation.

Roll Call - **Ayes:** President Aliff, Councilor Boston, Councilor Flores, Councilor Gomez, Councilor Latino, Councilor Maestri, Councilor Martinez. **Nays:** None. Motion Passed 7-0.

This Ordinance was assigned as **10826.**

S2 AN ORDINANCE APPROVING THE NORTH VISTA HIGHLANDS, FILING NO.

11 SUBDIVISION

A staff report and detailed review of the Ordinance was given by Scott Hobson, Acting Director of Planning & Community Development.

Mr. Hobson requested that the Planning & Zoning documents for this item, Case #S2403 dated: October 9th, 2024, be made part of the record for this hearing. So ordered by President Aliff.

PUBLIC HEARING:

Michael Guppy appeared in person and spoke in favor of this Ordinance.

Seeing no one else wishing to speak, President Aliff declared the hearing closed.

Councilor Gomez, seconded by Councilor Latino, moved to approve the Ordinance on final presentation.

Roll Call - **Ayes:** President Aliff, Councilor Boston, Councilor Flores, Councilor Gomez, Councilor Latino, Councilor Maestri, Councilor Martinez. **Nays:** None. Motion Passed 7-0.

This Ordinance was assigned as **10827.**

S3 AN ORDINANCE APPROVING THE NORTH VISTA HIGHLANDS, FILING NO. 12 SUBDIVISION

A staff report and detailed review of the Ordinance was given by Scott Hobson, Acting Director of Planning & Community Development.

Mr. Hobson requested that the Planning & Zoning documents for this item, Case #S2404 dated: October 9th, 2024, be made part of the record for this hearing. So ordered by President Aliff.

PUBLIC HEARING:

Michael Guppy appeared in person and spoke in favor of this Ordinance.

Seeing no one else wishing to speak, President Aliff declared the hearing closed.

Councilor Gomez, seconded by Councilor Boston, moved to approve the Ordinance on final presentation.

Roll Call - **Ayes:** President Aliff, Councilor Boston, Councilor Flores, Councilor Gomez, Councilor Latino, Councilor Maestri, Councilor Martinez. **Nays:** None. Motion Passed 7-0.

This Ordinance was assigned as **10828.**

S4 AN ORDINANCE APPROVING THE NORTH VISTA HIGHLANDS, FILING NO. 13 SUBDIVISION

A staff report and detailed review of the Ordinance was given by Scott Hobson, Acting Director of Planning & Community Development.

Mr. Hobson requested that the Planning & Zoning documents for this item, Case #S2405 dated: October 9th, 2024, be made part of the record for this hearing. So ordered by President Aliff.

PUBLIC HEARING:

Michael Guppy appeared in person and spoke in favor of this Ordinance.

Seeing no one else wishing to speak, President Aliff declared the hearing closed.

Councilor Latino, seconded by Councilor Gomez, moved to approve the Ordinance on final presentation.

Roll Call - **Ayes:** President Aliff, Councilor Boston, Councilor Flores, Councilor Gomez, Councilor Latino, Councilor Maestri, Councilor Martinez. **Nays:** None. Motion Passed 7-0.

This Ordinance was assigned as **10829.**

S5 AN ORDINANCE DESIGNATING 115 EAST ROUTT AVENUE, PUEBLO DIVINE SCIENCE CHURCH, AS A LOCAL HISTORIC LANDMARK

A staff report and detailed review of the Ordinance was given by Scott Hobson, Interm Director of Planning and Community Development.

Mr. Hobson requested that the Historical Preservation Commission documents for this item, Case #HPC2405 and Planning & Zoning Commission dated: August 21st, 2024, be made part of the record for this hearing. So ordered by President Aliff.

PUBLIC HEARING:

Scott McMillen appeared in person and spoke in favor of this Ordinance.

Seeing no one else wishing to speak, President Aliff declared the hearing closed.

Councilor Maestri, seconded by Councilor Flores, moved to approve the Ordinance on final presentation.

Roll Call - **Ayes:** President Aliff, Councilor Boston, Councilor Flores, Councilor Gomez, Councilor Latino, Councilor Maestri, Councilor Martinez. **Nays:** None. Motion Passed 7-0.

This Ordinance was assigned as **10830.**

S6 AN ORDINANCE AMENDING ZONING RESTRICTIONS TO REZONE 634 GOODNIGHT AVENUE FROM R-2, SINGLE-FAMILY RESIDENTIAL ZONE DISTRICT TO CCN, COMMERCIAL CHARTER NEIGHBORHOOD ZONE DISTRICT

A staff report and detailed review of the Ordinance was given by Scott Hobson, Acting Director of Planning & Community Development.

Mr. Hobson requested that the Planning & Zoning documents for this item, Case #Z2404 dated: September 25th, 2024, be made part of the record for this hearing. So ordered by President Aliff.

PUBLIC HEARING:

KC Prutch appeared in person and spoke in favor of this Ordinance
Chris Duby appeared in person and spoke in favor of this Ordinance.

Seeing no one else wishing to speak, President Aliff declared the hearing closed.

Councilor Boston, seconded by Councilor Maestri, moved to approve the Ordinance on final presentation.

Roll Call - **Ayes:** President Aliff, Councilor Latino, Councilor Maestri. **Nays:** Councilor Boston, Councilor Flores, Councilor Gomez, Councilor Martinez. Motion Failed 3-4.

S7 AN ORDINANCE AMENDING ZONING RESTRICTIONS TO REZONE 3215 LAKE AVENUE, LOCATED SOUTH OF PUEBLO BOULEVARD AND WEST OF LAKE AVENUE FROM I-2,INDUSTRIAL ZONE DISTRICT TO R-6, MULTIPLE RESIDENTIAL AND COMMERCIAL ZONE DISTRICT

A staff report and detailed review of the Ordinance was given by Scott Hobson, Acting Director of Planning & Community Development.

Mr. Hobson requested that the Planning & Zoning documents for this item, Case #Z2414 dated: September 25th, 2024, be made part of the record for this hearing. So ordered by President Aliff.

PUBLIC HEARING:

Jason Alwine appeared in person and spoke in favor of this Ordinance.

Seeing no one else wishing to speak, President Aliff declared the hearing closed.

Councilor Gomez, seconded by Councilor Boston, moved to approve the Ordinance on final presentation.

Roll Call - **Ayes:** President Aliff, Councilor Boston, Councilor Flores, Councilor Gomez, Councilor Maestri, Councilor Martinez. **Nays:** Councilor Latino. Motion Passed 6-1.

This Ordinance was assigned as **10831.**

S8 AN ORDINANCE AMENDING ZONING RESTRICTIONS OF THE BELMONT PLACE, PLANNED UNIT DEVELOPMENT TO A COMBINATION OF THREE ZONE DISTRICTS: B-3, HIGHWAY AND ARTERIAL BUSINESS ZONE DISTRICT, R-2, SINGLE FAMILY RESIDENTIAL ZONE DISTRICT AND R-5, MULTIPLE-RESIDENTIAL AND OFFICE ZONE DISTRICT

A staff report and detailed review of the Ordinance was given by Scott Hobson, Acting Director of Planning & Community Development.

Mr. Hobson requested that the Planning & Zoning documents for this item, Case #Z2312 dated: February 14th, 2024, be made part of the record for this hearing. So ordered by President Aliff.

PUBLIC HEARING:

Joe Gagliano appeared in person and spoke in favor of this Ordinance.

Seeing no one else wishing to speak, President Aliff declared the hearing closed.

Councilor Gomez, seconded by Councilor Latino, moved to approve the Ordinance on final presentation.

Roll Call - **Ayes:** President Aliff, Councilor Boston, Councilor Flores, Councilor Gomez,

Councilor Latino, Councilor Maestri, Councilor Martinez. **Nays:** None. Motion Passed 7-0.

This Ordinance was assigned as **10832.**

S9 AN ORDINANCE APPROVING THE BELMONT PLACE SUBDIVISION, FILING NO. 1

A staff report and detailed review of the Ordinance was given by Scott Hobson, Acting Director of Planning & Community Development.

Mr. Hobson requested that the Planning & Zoning documents for this item, Case #S2207 dated: February 14th, 2024, be made part of the record for this hearing. So ordered by President Aliff.

PUBLIC HEARING:

Joe Gagliano appeared in person and spoke in favor of this Ordinance.

Seeing no one else wishing to speak, President Aliff declared the hearing closed.

Councilor Latino, seconded by Councilor Maestri, moved to approve the Ordinance on final presentation.

Roll Call - **Ayes:** President Aliff, Councilor Boston, Councilor Flores, Councilor Gomez, Councilor Latino, Councilor Maestri, Councilor Martinez. **Nays:** None. Motion Passed 7-0.

This Ordinance was assigned as **10833.**

T. EMERGENCY ORDINANCES

T1 AN EMERGENCY ORDINANCE AMENDING ORDINANCE NO. 10582 TO ALLOW THE MAYOR, DURING DECLARED TEMPORARY HOUSING AND SHELTER EMERGENCIES, TO AUTHORIZE THE PROPERTY LOCATED AT 710 W. 4TH STREET TO OPERATE AS AN OVERNIGHT EMERGENCY SHELTER AND SUSPENDING ORDINANCES AND REGULATIONS OF THE CITY IN CONFLICT THEREWITH

A staff report and detailed review of the Ordinance was given by Carla Sikes, City Attorney.

PUBLIC HEARING:

Elvis Martinez appeared in person and spoke in favor of this Ordinance.

Seeing no one else wishing to speak, President Aliff declared the hearing closed.

Councilor Boston, seconded by Councilor Maestri, moved to approve the Ordinance on final presentation.

Roll Call - **Ayes:** President Aliff, Councilor Boston, Councilor Flores, Councilor Gomez, Councilor Latino, Councilor Maestri, Councilor Martinez. **Nays:** None. Motion Passed 7-0.

This Ordinance was assigned as **10834.**

U. COUNCIL MEMBER CONFLICT OF INTEREST

U1 A CITIZEN FILED AN ETHICS COMPLAINT AGAINST COUNCILOR REGINA MAESTRI

Councilor Maestri recused herself from this item.

A staff report and detailed review of the complaint was given by Harley Gifford, Deputy City Attorney.

Councilor Gomez, seconded by Councilor Boston, moved to accept the complaint.

Roll Call - **Ayes:** President Aliff, Councilor Boston, Councilor Flores, Councilor Gomez, Councilor Latino, Councilor Martinez. **Nays:** None. Motion Passed 6-0.

Councilor Flores, seconded by Councilor Latino, moved to dismiss the complaint.

Roll Call - **Ayes:** President Aliff, Councilor Boston, Councilor Flores, Councilor Gomez, Councilor Latino, Councilor Martinez. **Nays:** None. Motion Passed 6-0.

V. ADJOURN

President Aliff adjourned the meeting at 10:44 pm.

Respectfully submitted,

Vincent Petkosek
City Clerk

Docusign Envelope ID: 1DDD049B-FCF9-4559-95A9-751907C4636E

City Clerk's Office Item # M1

Background Paper for Proposed Resolution

COUNCIL MEETING DATE: November 11, 2024

TO: President Mark Aliff and Members of City Council

CC: Mayor Heather Graham

VIA: Marisa Stoller, City Clerk

FROM: Andrew Hayes, Public Works Director

SUBJECT: A RESOLUTION AWARDING AN AGREEMENT FOR PROFESSIONAL CONSULTING SERVICES IN THE AMOUNT OF $400,000 TO DIEXSYS, LLC., A COLORADO LIMITED LIABILITY COMPANY, FOR PROJECT NO. 24-012 CONSULTANT FOR PUEBLO AREA COMPREHENSIVE SAFETY ACTION PLAN AND AUTHORIZING THE PURCHASING AGENT TO EXECUTE SAME

SUMMARY:

This Resolution awards an Agreement for Professional Consulting Services to DiExSys, LLC, to render certain professional consulting services for the development of an evidence-based safety action plan. DiExSys, LLC, was determined to be the most responsible bidder and will be awarded a contract in the amount of $400,000.00.

PREVIOUS COUNCIL ACTION:

Ordinance 10499, approved on June 26, 2023, established Project Account PL2305, for Safe Streets & Roads for All - SS4A, approved an IGA with Federal Highway Administration (FHWA) in the amount of $681,600, transferred $170,400 from Project Account CI2204 to Project Account PL2305, and budgeted and appropriated $852,000.00 for the project.

Resolution 15652, dated June 10, 2024, awarded an agreement for professional consulting services in the amount of $155,000 to Street Simplified, LLC to render professional traffic engineering, data collection, analysis, reporting, support and related services.

BACKGROUND:

The City was awarded a Safe Streets for All (SS4A) Planning Grant to hire a consultant or consultants to create an evidence-based Action Plan that will facilitate life-saving redesigns that significantly reduce or eliminate roadway fatalities and serious injuries.

Docusign Envelope ID: 1DDD049B-FCF9-4559-95A9-751907C4636E

The Comprehensive Safety Plan will be developed through interaction between multiple community stakeholder groups to identify projects and programs that will help contribute to improving the safety of pedestrians, bicyclists and vehicles.

The first portion of the work to be completed through the Planning Grant is to analyze traffic safety at fifteen key intersections in the PACOG MPO area. The intersections identified are as follows:

1. N. Elizabeth & US Hwy 50
2. W. Northern Ave. & S. Prairie Ave.
3. W. 29th Street & N. Elizabeth Street
4. US Hwy 50 & Outlook Blvd. (North intersection)
5. US Hwy 50 & Outlook Blvd. (South intersection)
6. N. Elizabeth St. & W. 13th Street
7. Jerry Murphy Rd. & Bonforte Blvd.
8. Dillon Dr. & Walmart Entrance
9. E. 4th St. (CO Hwy 96) & N. Iola Ave.
10. E. 4th St. (CO Hwy 96) & Midtown Circle Dr.
11. Lincoln St. (CO Hwy 96) & W. Evans Ave.
12. Santa Fe Dr. (US Hwy 50 Business) & 36th Ln.
13. McCulloch Blvd. & Spaulding Ave. (The northernmost intersection closest to US Hwy 50 next to Loaf-N-Jug and Sonic)
14. US Hwy 50 & McCulloch Blvd.
15. E. Platteville Dr. & Purcell Blvd

Street Simplified, LLC completed a full analysis of these intersections, looking at turning movements, speed analytics, crosswalk usage and analysis, cyclist turning movements, near miss analysis, speeding analysis, red light running, and intersection blocking. DiExSys, LLC will now utilize that information to create the Comprehensive Safety Study Action Plan.

FINANCIAL IMPLICATIONS:

Funding in the amount of $400,000 will be paid from Project Account PL2305 – Safe Streets & Roads for All - SS4A.

BOARD/COMMISSION RECOMMENDATION:

Not Applicable to this Resolution.

STAKEHOLDER PROCESS:

Not Applicable to this Resolution.

ALTERNATIVES:

Denial of this Resolution will result in cancelation of the project.

RECOMMENDATION:

Approval of the Resolution.

ATTACHMENTS:

1. 24-012 DiExSys Agreement for Safety Action Plan

Docusign Envelope ID: 1DDD049B-FCF9-4559-95A9-751907C4636E

RESOLUTION NO. 15806

A RESOLUTION AWARDING AN AGREEMENT FOR PROFESSIONAL CONSULTING SERVICES IN THE AMOUNT OF $400,000 TO DIEXSYS, LLC., A COLORADO LIMITED LIABILITY COMPANY, FOR PROJECT NO. 24-012 CONSULTANT FOR PUEBLO AREA COMPREHENSIVE SAFETY ACTION PLAN AND AUTHORIZING THE PURCHASING AGENT TO EXECUTE SAME

WHEREAS, the Proposal of DiExSys, LLC, for Project No. 24-012 Consultant for Pueblo Area Comprehensive Safety Action Plan, has been received and examined; AND,

WHEREAS, the Proposal of DiExSys, LLC, was determined to be the most advantageous to the City of Pueblo, and in the best interest of the City of Pueblo, based on the evaluation factors set forth in the Request for Proposals; NOW, THEREFORE,

BE IT RESOLVED BY THE CITY COUNCIL OF PUEBLO, that

SECTION 1.

The City Council authorizes Project No. 24-012 Consultant for Pueblo Area Comprehensive Safety Action Plan to be performed, and the Contract for said services is hereby awarded to DiExSys, LLC, a Colorado Limited Liability Company, in the amount of $400,000.

SECTION 2.

Funds for said Agreement shall be paid from Project Account PL2305 - Safe Streets & Roads for All - SS4A.

SECTION 3.

The Purchasing Agent is hereby authorized to execute said contract on behalf of the City of Pueblo, a Colorado Municipal Corporation, and the City Clerk shall affix the seal of the City thereto and attest the same.

SECTION 4.

The officers of the City are authorized to perform any and all acts consistent with this Resolution to implement the policies and procedures described herein.

SECTION 5.

This Resolution shall become effective immediately upon passage and approval.

INTRODUCED: November 11, 2024

BY: Regina Maestri
MEMBER OF CITY COUNCIL

APPROVED: DocuSigned by: Mark Alliff B7A4F51623AB462...
PRESIDENT OF CITY COUNCIL

ATTESTED BY: DocuSigned by: 7C02EB0EFC3D43C...
CITY CLERK

AGREEMENT FOR PROFESSIONAL CONSULTING SERVICES

BY AND BETWEEN CITY OF PUEBLO AND DIEXSYS, LLC

24-012

CONSULTANT FOR PUEBLO AREA COMPREHENSIVE SAFETY ACTION PLAN

AGREEMENT FOR PROFESSIONAL CONSULTING SERVICES BY AND BETWEEN CITY OF PUEBLO AND DIEXSYS, LLC

1. INTRODUCTION

THIS AGREEMENT ("Agreement") made and entered this _____ day of _____, 20____, by and between the City of Pueblo, a Colorado Municipal Corporation (hereinafter referred to as "City") and DiExSys, LLC, a Colorado Limited Liability Company (hereinafter referred to as "Consultant"), a professional firm for Consultant to render certain professional consulting services for the development of an evidence-based safety action plan (CSAP) and related services for City in connection with Bid 24-012 Consultant for Pueblo Area Comprehensive Safety Action Plan, hereinafter referred to as the "Project." In consideration of the mutual covenants hereinafter set forth, the parties agree as follows:

A. Consultant shall satisfactorily perform professional project management, development of the CSAP, data collection/review, and related services for the Project described in more detail in Schedule 1 attached hereto and incorporated herein by reference (the "Services"). Such Services shall include all usual and customary professional services incidental to the work on the Project. In the event this Agreement follows the selection of Consultant by City pursuant to a Request for Proposals (RFP), all of the requirements of that RFP are incorporated herein by reference, unless any requirement is expressly excluded in Schedule 1.

B. To the extent Consultant performs any of the Project work through subcontractors or subconsultants, Consultant shall be and remain as fully responsible for the full performance and quality of services performed by such subcontractors or subconsultants as it is for services performed directly by Consultant or Consultant's employees.

C. To the extent Consultant requires access to private property to perform its services hereunder, Consultant shall be required to make arrangements to obtain such access. However, in the event City has already secured access for Consultant to any such property through a right of entry agreement, access agreement, letter of consent or other instrument, Consultant shall fully comply with and be subject to the terms and conditions set forth therein. A copy of any such instrument will be provided to Consultant upon request.

2. CONSULTANT'S RESPONSIBILITIES

A. Consultant shall be responsible for the professional quality, technical accuracy, and timely completion of Consultant's work, data collection/review, reports, completed CSAP, and other services, including that performed by Consultant's subconsultants and subcontractors, irrespective of City's approval of or acquiescence in same. Consultant shall be responsible, in accordance with applicable law, to City for all loss or damage to City caused by Consultant's negligent act or omission; except that Consultant hereby irrevocably waives and excuses City and City's attorneys from compliance with any requirement to obtain a certificate of review as a

condition precedent to commencement of an action, including any such requirements set forth in Section 13-20-602, C.R.S. or similar statute, whether now existing or hereafter enacted.

B. Consultant shall be completely responsible for the safety of Consultant's employees in the execution of work under this Agreement and shall provide all necessary safety and protective equipment for said employees.

C. Consultant acknowledges that time is of the essence with respect to the completion of its services under this Agreement. Consultant represents that Schedule 3 attached hereto is the schedule by which Consultant proposes to accomplish its work, with time periods for which it will commence and complete each major work item. Except to the extent the parties agree to time extensions for delays beyond the control of Consultant, Consultant shall adhere to this schedule and perform its work in a timely manner so as not to delay City's timetable for achievement of interim tasks and final completion of Project work. Consultant further acknowledges that its schedule has accounted for all reasonably anticipated delays, including those inherent in the availability of tools, supplies, labor and utilities required for the work, the availability of information which must be obtained from any third parties, and all conditions to access to public and private facilities.

D. Before undertaking any work or incurring any expense which Consultant considers beyond or in addition to the Services described in Schedule 1 or otherwise contemplated by the terms of this Agreement, Consultant shall advise City in writing that (1) Consultant considers the work beyond the scope of this Agreement, (2) the reasons that Consultant believes the out of scope or additional work should be performed, and (3) a reasonable estimate of the cost of such work. Consultant shall not proceed with any out of scope or additional work until authorized in writing by City. The compensation for such authorized work shall be negotiated, but in the event the parties fail to negotiate or are unable to agree as to compensation, then Consultant shall be compensated for its direct costs and professional time at the rates set forth in Schedule 2 attached hereto.

E. Consultant acknowledges that, due to the nature of the services for this project, related professional services, and the impact of same on the Project, the City has a substantial interest in the personnel and consultants to whom Consultant assigns principal responsibility for services performed under this Agreement. Consequently, Consultant represents that Consultant has selected and intends to employ or assign the key personnel and subconsultants identified in Schedule 4 ("Identification of Personnel, Subcontractors, and Task Responsibility") attached hereto for the Project assignments and areas of responsibility stated therein. Within 10 days of execution of this Agreement, City shall have the right to object in writing to employment on the Project of any such key person, subconsultant, or assignment of principal responsibility, in which case Consultant will employ alternate personnel for such function or reassign such responsibility to another to whom City has no reasonable objection. Thereafter, Consultant shall not assign or reassign Project work to any person to whom City has reasonable objection.

3. CITY'S RESPONSIBILITIES

A. City agrees to advise Consultant regarding City's Project requirements and to provide all relevant information, data and previous reports accessible to City which Consultant may reasonably require.

B. City shall designate a Project Representative to whom all communications from Consultant shall be directed and who shall have limited administrative authority on behalf of City to receive and transmit information and make decisions with respect to the Project. Said representative shall not, however, have authority to bind City as to matters of governmental policy or fiscal policy, nor to contract for additions or obligations exceeding a value which is the lesser of $5000 or 5% of the maximum agreement price.

C. City shall examine all documents presented by Consultant and render decisions pertaining thereto within a reasonable time. The City's approval of any data, reports, CSAP, technical information, or product furnished hereunder shall not in any way relieve Consultant of responsibility for the professional adequacy of its work.

D. City shall perform its obligations and render decisions within a reasonable time under the circumstances presented. Based upon the nature of City and its requirements, a period of 14 days shall be presumed reasonable for any decision not involving policy decision or significant financial impact, when all information reasonably necessary for City to responsibly render a decision has been furnished. A period of 46 days shall be presumed reasonable for City to act with respect to any matter involving policy or significant financial impact. The above periods of presumed reasonableness shall be extended where information reasonably required is not within the custody or control of City but must be procured from others.

4. TIME FOR PERFORMANCE

Consultant's obligation to render services shall continue for such period of time as may reasonably be required for completion of the work contemplated in Schedule 1 – “Services” and Section 2 of this Agreement. The proposed work schedule attached as Schedule 3 may be adjusted by mutual agreement of all parties.

5. PAYMENT

A. City will pay to Consultant as full compensation for all services required to be performed by Consultant under this Agreement, except for services for additional work or work beyond the scope of this Agreement, an amount not to exceed $400,000.00 in the aggregate as set forth in Schedule 2 "Fee Schedule" and computed in accordance with this Section. In the event compensation for services is set forth in Schedule 2 as to each phase of work indicated in this Agreement, the maximum amount of compensation for any phase shall not exceed the amount specified in Schedule 2 for such phase.

B. Consultant shall submit periodic, but not more frequently than monthly, applications for payment, aggregating to not more than the maximum amount set forth above, for actual professional services rendered and reimbursable expenses incurred. Such applications shall be submitted based upon the hourly rates and expense reimbursement provisions set forth in Schedule 2 attached hereto and shall contain appropriate documentation that such services have been performed and expenses incurred. Thereafter, City shall pay Consultant for the amount of the application within 45 days of the date of such application is received, provided that sufficient documentation has been furnished, and further provided that City will not be required to pay more than 90% of the maximum amount unless the Consultant's services on the Project phases for which this Agreement is applicable have been completed to City's reasonable satisfaction and all required Consultant submittals have been provided.

C. No separate or additional payment shall be made for profit, overhead, local telephone expenses, lodging, routine photocopying, computer time, secretarial or clerical time or similar expenses unless otherwise provided and listed in Schedule 2 - "Fee Schedule."

D. No compensation shall be paid to Consultant for services required and expenditures incurred in correcting Consultant's mistakes or negligence.

E. Compensation for authorized work beyond the scope of this Agreement shall be governed by Section 2.

6. TERMINATION

A. City reserves the right to terminate this Agreement and Consultant's performance hereunder, at any time upon written notice, either for cause or for convenience. Upon such termination, Consultant and its subcontractors shall cease all work, stop incurring expenses, and shall promptly deliver to City all data, reports, CSAP, technical information, or work product and materials as Consultant may have accumulated in performing this Agreement, together with all finished work and work in progress. Consultant shall at all times act in good faith with respect to the orderly transfer of work to the City or any entity designated by City.

B. Upon termination of this Agreement for events or reasons not the fault of Consultant, Consultant shall be paid at the rates specified in Schedule 2 for all services rendered and reasonable costs incurred to the date of termination; together with any reasonable costs incurred within 10 days of termination provided such latter costs could not be avoided or were incurred in mitigating loss or expenses to Consultant or City. Consultant shall provide a detailed final invoice to the City within fourteen (14) calendar days from the effective date of termination, itemizing the work completed, costs incurred, and any outstanding payments due. In no event shall payment to Consultant upon termination exceed the maximum compensation provided for complete performance in Section 5, and the Consultant expressly waives any right to claim damages, including but not limited to lost profits, anticipated revenue, or indirect or consequential damages arising out of or relating to the termination for convenience.

C. In the event termination of this Agreement or Consultant's services is for breach of this Agreement by Consultant, or for other fault of Consultant including but not limited to any failure to timely proceed with work, or to pay its employees and Consultants, or to perform work according to the highest professional standards, or to perform work in a manner deemed satisfactory by City's Project Representative, then in that event, Consultant's entire right to compensation shall be limited to the lesser of: (1) the reasonable value of completed work to City, or (2) payment at the rates specified in Schedule 2 for services satisfactorily performed and reimbursable expenses reasonably incurred, prior to date of termination.

D. Consultant's responsibility for its completed work and services shall survive any termination.

7. GENERAL PROVISIONS

7.1. Ownership of Documents

Data, reports, CSAP, technical information, plans, evaluations, and all other documents or instruments procured or produced by the Consultant in the performance of this Agreement shall be the sole property of the City and the City is vested with all rights therein of whatever kind and however created, whether created by common law, statutory law, or by equity. The Consultant agrees that the City shall have access at all reasonable times to inspect and make copies of all communication, notes, data, reports, CSAP, technical information, plans, evaluations, and all other documents pertaining to the work to be performed under this Agreement. In the event City uses the information provided hereunder for another project independent from Project, without adaptation by Consultant, City shall hold harmless Consultant from all loss, claims, injury, and judgments arising from the use of such information for such other project.

7.2. Advertising

Unless specifically approved in advance in writing by City, Consultant shall not include representations of the Project in any advertising or promotional materials, except for accurate statements contained in resumes or curriculum vitae of Consultant’s employees. If Consultant wishes to include representations in advertising or promotional materials, it shall submit a draft of same and printer’s proof of the proposed advertising or promotional materials to the City for prior review and shall not publish or distribute same unless written approval of the materials is first obtained.

7.3. Equal Employment Opportunity

In connection with the performance of this Agreement, Consultant shall not discriminate against any employee or applicant for employment because of race, color, religion, sex, sexual orientation, national origin, disability, or age. Consultant shall endeavor to ensure that applicants are employed, and that employees are treated during employment without regard to their race, color, religion, sex, sexual orientation, national origin, disability, or age.

7.4. Notices

Any and all notices or other communications required or permitted by this Agreement or by law to be served on or given to either the City or the Consultant by the other party shall be in writing and shall be

deemed duly served and given when personally delivered to the party to whom it is directed, or in lieu of such personal service when deposited in the United States mail, first-class postage prepaid, addressed to the City of Pueblo, Department of Public Works, Attn: Andrew Hayes, Director, 211 E. D Street, Pueblo, CO, 81003; or to the Consultant, DiExSys, LLC, Attn: Jake Kononov, Managing Member (President), 3717 Windchant Cir., Castle Rock, CO, 80104. Either party may change their address for the purpose of this paragraph by giving written notice of such change to the other party in the manner provided in this paragraph.

7.5. Entire Agreement

This instrument contains the entire agreement between the City and the Consultant respecting the Project, and any other written or oral agreement or representation respecting the Project or the duties of either the City or the Consultant in relation thereto not expressly set forth in this instrument are null and void. Notwithstanding the foregoing, the terms of 24-012 Consultant for Pueblo Area Comprehensive Safety Action Plan are hereby incorporated herein, and Consultant agrees to abide by and comply with the same. In the event of any conflict between any provision of this Agreement and a provision of any Schedule or attachment to this Agreement, the provision in this Agreement shall control and supersede the conflicting provision in the Schedule or attachment. Any inconsistent resolution provision in any attachment to this Agreement shall be void.

7.6. Subcontracts

A. City acknowledges that Consultant is the prime contractor and the only party with whom City has a contractual relationship under this Agreement. To the extent Consultant performs any Project activities through subconsultants or subcontractors, Consultant shall contractually bind each of its subconsultants and subcontractors by subcontract agreement to all of the terms of this Agreement which are for the benefit of City, and City shall be a third-party beneficiary of those subcontract provisions.

B. Consultant shall indemnify and defend City from all claims and demands for payment for services provided by subcontractors of Consultant.

C. Consultant acknowledges that, due to the nature of the services to be provided under this Agreement, the City has a substantial interest in the personnel and consultants to whom Consultant assigns principal responsibility for services performed under this Agreement. Consequently, Consultant represents that it has selected and intends to employ or assign the key personnel and consultants identified in its proposal submitted to City prior to execution of this Agreement to induce City to enter this Agreement. Consultant shall not change such consultants or key personnel except after giving notice of a proposed change to City and receiving City's consent thereto. Consultant shall not assign or reassign Project work to any person to whom City has reasonable objection.

7.7. Successors and Assigns

This Agreement shall be binding on the parties hereto and on their partners, heirs, executors, administrators, successors, and assigns; provided, however, that neither this Agreement, nor any part

thereof, nor any moneys due or to become due hereunder to the Consultant may be assigned by it without the written consent of the City. It is expressly understood and agreed that enforcement of the terms and conditions of this Agreement, and all rights of action relating to such enforcement, shall be strictly reserved to the parties hereto, and nothing contained in this Agreement shall give or allow any such claim or right of action by any other or third person or entity on such Agreement. It is the express intention of the parties hereto that any person or entity, other than the parties to this Agreement, receiving services or benefits under this Agreement shall be deemed to be an incidental beneficiary only.

7.8. Amendments

No amendment to this Agreement shall be made nor be enforceable unless made by written Amendment signed by an authorized representatives of both Consultant and City.

7.9. Choice of Law, Jurisdiction, and Venue

Colorado law, the Pueblo City Charter, the Pueblo Municipal Code, and rules and regulations issued pursuant thereto shall be applied in the interpretation, execution, and enforcement of this Agreement. Any provision included or incorporated herein by reference that conflicts with said laws, rules, and regulations shall be null and void. All suits or actions related to this Agreement shall be filed and proceedings held in the State of Colorado and exclusive venue shall be in the County of Pueblo.

7.10. Severability

If any provision of this Agreement, except for Section 2, is determined to be directly contrary to and prohibited by law or the requirements of any federal grant or other Project funding source, then such provision shall be deemed void and the remainder of the Agreement enforced. However, it is the intent of the parties that Section 2 of this Agreement not be severable, and that if any provision of said section be determined to be contrary to law or the terms of any federal grant, then this entire Agreement shall be void.

7.11. Appropriations

A. Subject to execution of this Agreement by the Director of Finance certifying that a balance of appropriation exists and funds are available, the amount of money appropriated for this Agreement is equal to or in excess of the maximum compensation payable hereunder; provided, however, that if work is phased and subject to annual appropriation, funds only in the amount of initial appropriation are available and Consultant shall confirm availability of funds before proceeding with work exceeding initial and subsequent annual appropriations.

B. Financial obligations of the City payable after the current City Fiscal Year are contingent upon funds for that purpose being appropriated, budgeted, and otherwise made available.

8. DISPUTES

Except as herein specifically provided otherwise, disputes concerning the performance of this Agreement which the designated Agreement representatives cannot resolve shall be referred in writing to the Mayor's Office for the City for a final determination of the issue. The Parties agree that participation in this administrative procedure shall be a condition precedent to the initiation of

litigation, except in the case of an emergency or other conditions that entitle either Party to seek injunctive or emergency relief from a court of competent jurisdiction, in which no participation in the preceding alternative dispute resolution process shall be required.

9. REQUIRED FEDERAL, STATE, AND/OR GRANT PROVISIONS

A. The City will utilize funding from the Safe Streets for All (SS4A) program. The services requested shall be funded by The United States Department of Transportation pursuant to the Action Plan Grant Award No. 693JJ32340380 effective July 20, 2023. A copy of the Grant Award (Agreement) is included as Schedule 5.

B. The awarded Contractor must perform all services in compliance with the Grant Award.

C. As required, Contractor shall abide by and perform steps to meet the funding requirements specifically outlined in Schedule 5.

D. As required, Contractor shall abide by and perform steps to meet the Grant Award requirements specifically outlined in the following sections of Attachment C: U.S. Department of Transportation Exhibits to the FHWA Grant Agreements Under The Fiscal Year 2022 Safe Streets and Roads for All Grant Program dated February 8, 2023 pages A-1 to B-21.

E. For the purposes of this award and all bid requirements, the awarded Contractor may be listed as "consultant", "contractor", and/or "subrecipient" in the attached documents.

F. Contractor/Consultant shall be responsible to follow all terms and conditions of the grant sections listed for Recipient in flow-down (pass-through) for the agreement awarded in this bid and any subcontractor/subconsultant agreements/contracts. 2 C.F.R. parts 200 and 1201, including 2 C.F.R. 200.331-200.333.

G. Consultant agrees it is subject to and shall comply with all applicable provisions of said SS4A funding requirements for which the award has been made and applicable regulations.

H. All records with respect to any matters covered by this Agreement shall be available for inspection by City and/or local, state, and federal agencies involved with the administration of the funds at any time during normal business hours and as often as agencies deem necessary, to audit, examine and make excerpts or transcripts of relevant information, and otherwise to perform its official functions or duties.

I. If any of the work to be performed by Consultant under this Agreement is funded in whole or in part with federal or state funds, then this Agreement shall be construed to include all applicable terms required by the federal or state assistance agreement and integrated federal or state regulations. By executing this Agreement, Consultant agrees to be bound by all such mandatory federal or state requirements, irrespective of Consultant's actual knowledge or lack of knowledge of such requirements prior to execution of this Agreement.

10. INSURANCE

10.1. Conditions

A. Consultant agrees that it has procured and will maintain during the term of this Agreement, such insurance as will protect it from claims under workers' compensation acts, claims for damages because of bodily injury including personal injury, sickness or disease or death of any of its employees or of any person other than its employees, and from claims or damages because of injury to or destruction of property including loss of use resulting therefrom; and such insurance will provide for coverage in such amounts as set forth below.

B. Consultant agrees to hold harmless, defend and indemnify City from and against any liability to third parties, arising out of negligent acts, errors or omissions of Consultant, their employees, subcontractors, and consultants.

10.2. Minimum Requirements

A. Commercial General Liability Insurance. The Consultant shall secure and maintain during the period of this agreement and for such additional time as work on the project is being performed, Commercial General Liability Insurance issued to and covering the liability of the Consultant with respect to all work performed by it and all its subcontractors under the agreement, to be written on a comprehensive policy form. This insurance shall be written in amounts not less than $1,000,000 for each occurrence and aggregate for personal injury including death and bodily injury and $1,000,000 for each occurrence and aggregate for property damage. This policy of insurance shall name the City of Pueblo, its agents, officers and employees as additional insureds. The policy shall also provide coverage for contractual liability assumed by Consultant under the provisions of the agreement.

B. Comprehensive Automobile Liability Insurance. The Consultant shall procure and maintain during the period of the agreement and for such additional time as work on the project is being performed, Comprehensive Automobile Liability Insurance. This insurance shall be written with limits of liability for and injury to one person in any single occurrence of not less than $350,000 and for any injury to two or more persons in any single occurrence of not less than $1,000,000. Alternate coverage of combined single limit, each accident, in an amount of not less than $1,000,000 may be accepted at the discretion of the Purchasing Director. This insurance shall include uninsured/underinsured motorist coverage and shall protect the Consultant from any and all claims arising from the use both on and off the site of the project of automobiles whether owned, leased, hired or used by Consultant.

C. Workers' Compensation Insurance complying with statutory requirements in Colorado and in any other state or states where the work is performed. The Workers' Compensation Insurance policy shall contain an endorsement waiving subrogation against the City.

D. Professional Liability Insurance with coverage of not less than $1,000,000 in a form and with a deductible acceptable to City.

10.3. Governmental Immunity

Liability for claims for injuries to persons or property arising from the negligence of the City, its departments, boards, commissions committees, bureaus, offices, employees and officials shall be controlled and limited by the provisions of the Colorado Governmental Immunity Act, §24-10-101, et seq., C.R.S.; the Federal Tort Claims Act, 28 U.S.C. Pt. VI, Ch. 171 and 28 U.S.C. 1346(b). No term or condition of this Agreement shall be construed or interpreted as a waiver, express or implied, of any of the immunities, rights, benefits, protections, or other provisions, contained in these statutes.

11. ACCESSIBILITY

The Americans with Disabilities Act (ADA) provides that it is a violation of the ADA to design and construct a facility for first occupancy later than January 26, 1993, that does not meet the accessibility and usability requirements of the ADA except where an entity can demonstrate that it is structurally impractical to meet such requirements. The Consultant therefore, will use its best reasonable professional efforts to implement applicable ADA requirements and other federal, state, and local laws, rules codes, ordinances and regulations as they apply to the Project.

12. IMMIGRATION REFORM AND CONTROL ACT OF 1986

Consultant certifies that it has complied with the United States Immigration Reform and Control Act of 1986. Consultant represents and warrants that to the extent required by said Act, all persons employed by Consultant for performance of this Agreement have completed and signed Form I-9 verifying their identities and authorization for employment.

13. PERA LIABILITY

The Consultant shall reimburse the City for the full amount of any employer contribution required to be paid by the City of Pueblo to the Public Employees' Retirement Association ("PERA") for salary or other compensation paid to a PERA retiree performing contracted services for the City under this Agreement. The Consultant shall complete the Colorado PERA Questionnaire and the completed form shall be included as an Additional Information of the signed Agreement.

14. SCHEDULES

The following Schedules are attached to and made a part of this Agreement:

- Schedule 1 - "Scope of Services" consisting of 8 pages.
- Schedule 2 - "Fee Schedule" consisting of 1 page.
- Schedule 3 - "Work Schedule" consisting of 1 page.

- Schedule 4 - "Identification of Personnel, Subcontractors, and Task Responsibility" consisting of 23 pages.
- Schedule 5 - "Special Funding Contract Requirements with SS4A FHWA Supplement" and "Intergovernmental Agreement for Street Safety Study" consisting of 86 pages.

15. SIGNATURE

A. This Agreement and all other documents contemplated hereunder may be executed using electronic signatures with delivery via facsimile transmission, by scanning and transmission of electronic files in Portable Document Format (PDF) or other readily available file format, or by copy transmitted via email, or by other electronic means and in one or more counterparts, each of which shall be: (1) an original, and all of which taken together shall constitute one and the same agreement, (2) a valid and binding agreement and fully admissible under state and federal law, and (3) enforceable in accordance with its terms.

B. This Agreement, together with all Project Documents incorporated by reference , constitutes the entire Agreement between City and Contractor with respect to their subject matter, and may not be amended a modified except by written document signed by both parties.

IN WITNESS WHEREOF the parties hereto have made and executed this Agreement as of the day and year first above written.

CITY OF PUEBLO, A MUNICIPAL CORPORATION

By_____
Naomi Hedden, Director of Purchasing

Attest_____
Marisa Stoller, City Clerk

[SEAL]

BALANCE OF APPROPRIATION EXISTS FOR THIS AGREEMENT AND FUNDS ARE AVAILABLE.

_____
Danny Nunn, Interim Finance Director

APPROVED AS TO FORM
DEPARTMENT OF LAW

_____
Robert Jagger, Deputy City Attorney

DIEXSYS, LLC

By_____
Jake Kononov, Managing Member (President)

Attachments: Schedule 1 – Schedule 5 and Additional Information for Agreement

Schedule 1

Scope of Service

Excerpt from Request for Proposal dated July 9, 2024, Sections 3.5 and 3.6

3.5 Scope of Work and Performance Tasks

The City of Pueblo is seeking a Consultant that can not only provide the typical qualifications necessary in the development of a CSAP but also can provide proactiveness, vision, innovation, and collaboration in examining and proposing strategies and recommendations that will ensure a reduction of fatal and serious crashes for all roadway users.

Outlined below is the scope of work that will guide the development of the CSAP. The City of Pueblo has included the following scope of work to provide interested consultants insight into project intent, context, coordination, responsibilities, and other elements to help facilitate proposal development.

This outline is not necessarily all-inclusive and the Consultant may include in the proposal any additional performance tasks that will integrate innovative approaches to successfully complete the CSAP. At a minimum, the Consultant shall be expected to establish detailed outlines, analyses, assessments, and recommendations for the following tasks:

Task 1: Project Structure and Work Plan.

A. Building on the scope of work presented in their proposal, and incorporating any relevant changes made during contract negotiations, the Consultant will prepare a detailed work plan and the achievable timeline for the CSAP anticipated to be completed by March 31, 2025.

B. The work plan will outline the overall approach, as well as specific actions and activities that will occur during the project and detail how these will result in a successful conclusion to the study.

Task 2: Project Management and Coordination.

A. The Consultant shall be required to manage the study and coordination with any subconsultants, as well as bear responsibility for all documentation and equipment needs.

B. The Consultant will identify a project lead from their team to act as the direct point of contact for the City's project manager.

C. This task will also include regular progress meetings with the City and other project stakeholders, the preparation of monthly progress reports, documentation of travel and expense receipts, and the preparation and submission of invoices.

    1. When submitting progress reports, the consultant will be required to outline the following:

        a. Performed work;

        b. Upcoming tasks or milestones;

c. Status of scope and schedule; and

d. Any outstanding issues the City project manager should be aware of.

D. Development of the CSAP will be guided by a Study Review Committee (SRC), which will provide oversight and input into study assessments, analyses, policies, and recommendations.

1. The Consultant should expect up to five meetings with the SRC.

E. The Consultant shall be responsible for the preparation and coordination of all data collection, data analysis, technical memorandum, and draft documents for the SRC.

F. The City of Pueblo shall be responsible for coordinating and scheduling SRC meetings and assisting the Consultant in developing agendas.

G. The Consultant will be expected to work closely with the City of Pueblo on the coordination and distribution of materials to the SRC as applicable to Consultant work tasks, as well as be responsible for the recording of meeting minutes.

H. The SRC is scheduled to be comprised of representatives from both the City of Pueblo and Pueblo County. Other regional, state, and federal partners including PACOG, CDOT, FHWA, and/or FTA may also be included in the SRC.

Task 3: Stakeholder and Public Engagement Program.

A. In compliance with PACOG Public Participation Plan (PPP), the Consultant will develop and implement a detailed stakeholder and public engagement program that seeks to gain authentic and meaningful public input from community members in the City of Pueblo and Pueblo County.

1. A strong emphasis shall be placed on equity and outreach to BIPOC, New Americans, historically marginalized communities, and economically disadvantaged communities in the region.

2. At a minimum, the stakeholder and public engagement program should address the following:

a. Identification of, and engagement activities for, key communities that may be disproportionately impacted by traffic risks and traditionally underserved by safety efforts;

b. Specific activities for reaching identified stakeholder groups and engagement strategies that inform, involve, and empower stakeholders and the public;

c. Examination of perceived safety culture and concerns;

d. Timeline for stakeholder and public engagement activities;

e. Communication methods for sharing information with residents and community members; and

f. Strategy for effective and consistent messaging.

B. The Consultant is encouraged to utilize creative methods, opportunities, and activities when collaborating, engaging, and informing stakeholders and the public, especially for communities disproportionately impacted and traditionally underserved.

C. The Consultant is also encouraged to review Promising Practices for Meaningful Public Involvement in Transportation Decision-Making for additional insights.

Task 4: Data Collection and Review.

A. The Consultant will collect and review existing, programs, policies, and activities, and provide a summary of current efforts to address transportation safety in the City of Pueblo and Pueblo County.

B. The Consultant should also review strategies that other cities, counties, and MPOs are using to address safety, identify programs that have evidence of measurable success, and provide an assessment of the most effective and efficient methods used to achieve outcomes. As part of this task, the consultant should at a minimum:

1. Review existing local, regional, state, and federal plans, studies, and initiatives related to roadway safety improvements to identify opportunities to improve processes for prioritizing transportation safety and collaboration that could lead to improved effectiveness of safety analysis, project development, and implementation for the City of Pueblo and Pueblo County;

2. Conduct a peer review and comparison of the crash analyses of similar-sized jurisdictions. This review should include, but is not limited to, a comparison based on crashes per vehicle-mile-traveled (VMT) and crashes per capita, and exposure to risk/crash risk;

3. Assess the quality and completeness of existing available data including crash, transportation, land use, and demographic data; and

4. Develop recommendations based on literature, policy, and data review on best analysis strategies and data requirements.

C. In addition to other data collected in the course of this project, supplemental traffic safety performance data will be provided by the City and County for up to fifteen (15) specific intersections that have a demonstrated history of significant numbers of crashes. These intersections may include:

1. N. Elizabeth & US Hwy 50

2. W. Northern Ave. & S. Prairie Ave.

3. W. 29th Street & N. Elizabeth Street

4. US Hwy 50 & Outlook Blvd. (North intersection)

5. US Hwy 50 & Outlook Blvd. (South intersection)
6. N. Elizabeth St. & W. 13th Street
7. Jerry Murphy Rd. & Bonforte Blvd.
8. Dillon Dr. & Walmart Entrance
9. E. 4th St. (CO Hwy 96) & N. Iola Ave.
10. E. 4th St. (CO Hwy 96) & Midtown Circle Dr.
11. Lincoln St. (CO Hwy 96) & W. Evans Ave.
12. Santa Fe Dr. (US Hwy 50 Business) & 36th Ln.
13. McCulloch Blvd. & Spaulding Ave. (The northernmost intersection closest to US Hwy 50 next to Loaf-N-Jug and Sonic)
14. US Hwy 50 & McCulloch Blvd.
15. E. Platteville Dr. & Purcell Blvd.

Task 5: Safety Analysis.

A. The Consultant will analyze existing safety conditions and historical trends that provide a baseline level of crashes involving fatalities and serious injuries across the City of Pueblo and Pueblo County.

   1. This safety analysis shall include an examination of locations where there are crashes and the severity of the crashes, as well as contributing factors and crash types by relevant road users (personal motorists, bicyclists, pedestrians, freight, etc.).
   2. An analysis of systemic and specific safety needs should also be performed, as needed (e.g., high-risk road features, specific safety needs of relevant road users, public health approaches, analysis of the built environment, demographic, and structural issues, etc.).
      a. To the extent practical, the analysis should include all roadways within Pueblo County, without regard for ownership.

Task 6: Transportation Equity Review.

A. The Consultant will perform a transportation equity review to better understand how current transportation systems, services, and decision-making processes impact the lives of all users, including underserved and underrepresented communities within Pueblo County.

   1. This should include an analysis of systems, services, and processes that support safe and easy-to-use multimodal options, amenities that are accessible to all populations for reaching destinations independently, and strategies to reduce socioeconomic disparities experienced by underserved and underrepresented communities.

B. As part of this task, the Consultant should develop and assess regional transportation indicators that easily measure transportation barriers in Pueblo County and/or potential structural inequalities that different population groups may face. These indicators should include, at a minimum:

1. Accessibility;
2. Connectivity;
3. Effectiveness;
4. Environment;
5. Health;
6. Mobility;
7. Safety;
8. Level of community engagement; and
9. Other equity indicators, as required.

Task 7: Dashboard and Toolkit.

A. The Consultant will establish a process and create publicly accessible tracking mechanisms in the form of an online dashboard or other appropriate format as a means to monitor safety outcomes and evaluate which safety measures are most effective throughout the City of Pueblo and Pueblo County, taking into account the different needs that exist for urbanized and rural areas.

1. Separate dashboards will be created for the City of Pueblo and Pueblo County, respectively.

B. The Consultant will also develop a safety toolkit with graphic visualizations that illustrate safety countermeasures, context-sensitive design solutions, and user educational components tailored for the region.

1. Content created for the safety toolkit may be common to both the City and the County for publication online.

C. The dashboards and toolkit shall be developed using tools such as ArcGIS Story Maps or other platform/medium approved by the City of Pueblo and Pueblo County.

Task 8: Implementation Matrix.

A. The Consultant will develop an implementation matrix that identifies potential projects (separated into projects for City, County, PACOG (MPO), or State implementation), strategies, and recommendations for future grant opportunities, measures that can be included in regular maintenance cycles, and potential updates to the City of Pueblo and Pueblo County standards and design criteria to better align with safety best practices.

B. The implementation matrix will recognize the needs of all users of the regional transportation system, potential projects that are feasible and applicable for grant funding, conceptual infrastructure improvements with estimated costs, and implementation schedule. Strategies and recommendations shall consider and outline fiscal and staff time resources necessary for a continued, sustained, and successful effort to achieve traffic safety goals and meet SS4A objectives after plan adoption.

C. A project readiness timeline for each strategy and project should be included for short-term (0-5 years), mid-term (5-10 years), and long-term (10+ years).

Task 9: Administrative Draft and Final Plan.

A. The Consultant will prepare an administrative draft of the CSAP for review and comment by the SRC.

   1. This draft is to be provided as an electronic PDF to SRC members.

   2. Comments received from the SRC will be incorporated into the final plan.

   3. The administrative draft (and final) plan shall include content to address each of the following eight programmatic elements in accordance with ATTACHMENT F - SS4A_Action_Plan_components.pdf:

      a. Leadership commitment and goal setting

      b. Planning structure

      c. Safety Analysis

      d. Engagement and collaboration

      e. Equity

      f. Policy and process changes

      g. Strategy and project selections

      h. Progress and transparency

B. Upon final review and consent by the SRC, the Consultant will develop a final report that is visually appealing, easy for policymakers and stakeholders to understand, and communicates action plan strategies and recommendations.

   1. The report should be able to be used both digitally and in hard copy format.

   2. This may take the form of separate print and web formats.

C. Specifically, the consultant should develop a final report that:

   1. Is organized and communicates a clear message both graphically and with accompanying text;

2. Is easy to read and understand; and
3. Explains key implications as they relate to policies, programs, practices, strategies, infrastructure projects, funding, and other recommendations.
4. Contains sufficient content to thoroughly address all required action plan components.

D. The Consultant shall provide the City of Pueblo, Pueblo County, and PACOG with appropriate presentation materials for final review and approval of the CSAP by the PACOG Technical Advisory Committee, PACOG Board, and other jurisdictions (e.g., Pueblo City Council, Pueblo County Board of County Commissioners) as appropriate.

Task 10: Executive Summary/Fact Sheet.

A. Upon completion of the CSAP, the Consultant shall develop a brief executive summary or fact sheet in PDF format which relays all pertinent information in an easy-to-follow format.

B. The summary should be concise and highly graphic, highlighting major assumptions, strategies, and recommendations.

Task 11: Summary Presentation.

A. Upon completion of the CSAP, the Consultant shall develop and jointly present (with City and County representatives) an executive summary presentation of findings and recommendations to be presented to the PACOG Board at one of their regularly-scheduled meetings.

Task 12: Deliverables.

A. Upon final project completion, the Consultant will be responsible for providing a high-resolution document in PDF format suitable for reading in digital and printed form.

B. The Consultant is also expected to provide the City of Pueblo and Pueblo County with all data and study products.

C. All meeting summaries and technical analyses should be included as an appendix of the study.

NOTE: If the Consultant wishes to modify or include additional tasks deemed necessary to complete the study, this must be agreed to by the City of Pueblo and Pueblo County before start of work.

3.6 Anticipated Major Milestones

A. Project Start-Up/Mobilization: Upon award by City Council and Agreement

B. Planned Draft Action Plan Completion: 12/31/2024

C. Final Action Plan Completion: 3/31/2025

D. Presentation of Findings to PACOG Board: 4/24/2025

E. Final Performance Measurement Baseline Report: 6/14/2025

F. Planned Action Plan Adoption: 6/27/2025

G. Final Invoices Received: 6/30/2025

Schedule 2

Fee Schedule

Excerpt from Consultant's Pricing Proposal submitted July 31, 2024

Comprehensive Safety Action Plan Pricing Proposal			
Line Item	**Description**	**Unit of Measure**	**Amount**
1	Task 1: Project Structure and Work Plan	Total for Completion of All Items In The Task	$10,000.00
2	Task 2: Project Management and Coordination	Total for Completion of All Items In The Task	$25,000.00
3	Task 3: Stakeholder and Public Engagement Program	Total for Completion of All Items In The Task	$50,000.00
4	Task 4: Data Collection and Review	Total for Completion of All Items In The Task	$30,000.00
5	Task 5: Safety Analysis	Total for Completion of All Items In The Task	$165,000.00
6	Task 6: Transportation Equity Review	Total for Completion of All Items In The Task	$25,000.00
7	Task 7: Dashboard and Toolkit	Total for Completion of All Items In The Task	$30,000.00
8	Task 8: Implementation Matrix	Total for Completion of All Items In The Task	$8,000.00
9	Task 9: Administrative Draft and Final Plan	Total for Completion of All Items In The Task	$30,000.00
10	Task 10: Executive Summary/Fact Sheet	Total for Completion of All Items In The Task	$8,000.00
11	Task 11: Summary Presentation	Total for Completion of All Items In The Task	$9,000.00
12	Task 12: Deliverables	Total for Completion of All Items In The Task	$10,000.00
Total All Tasks 1 - 12			**$400,000.00**
Proposed Additional Work (May only be performed if pre-authorized by City's Project Manager)			
13	Street Simplified Video Analytics for Additional Intersections	Each	$9,000.00
14	Additional Field Visits by DiExSys Staff Per Location	Each	$2,000.00
15	Additional Safety Analysis Reports	Each	$10,000.00
16	Additional Small Focus Group Public Involvement Effort	Each	$10,000.00
17	Additional Safety Summit	Each	$15,000.00
Items 13 - 17 are not awarded by this agreement; however, may be added by amendment if agreed upon by all parties.			

Schedule 3

Work Schedule

Excerpt from Consultant's Proposal dated July 31, 2024, Page 28

SCHEDULE

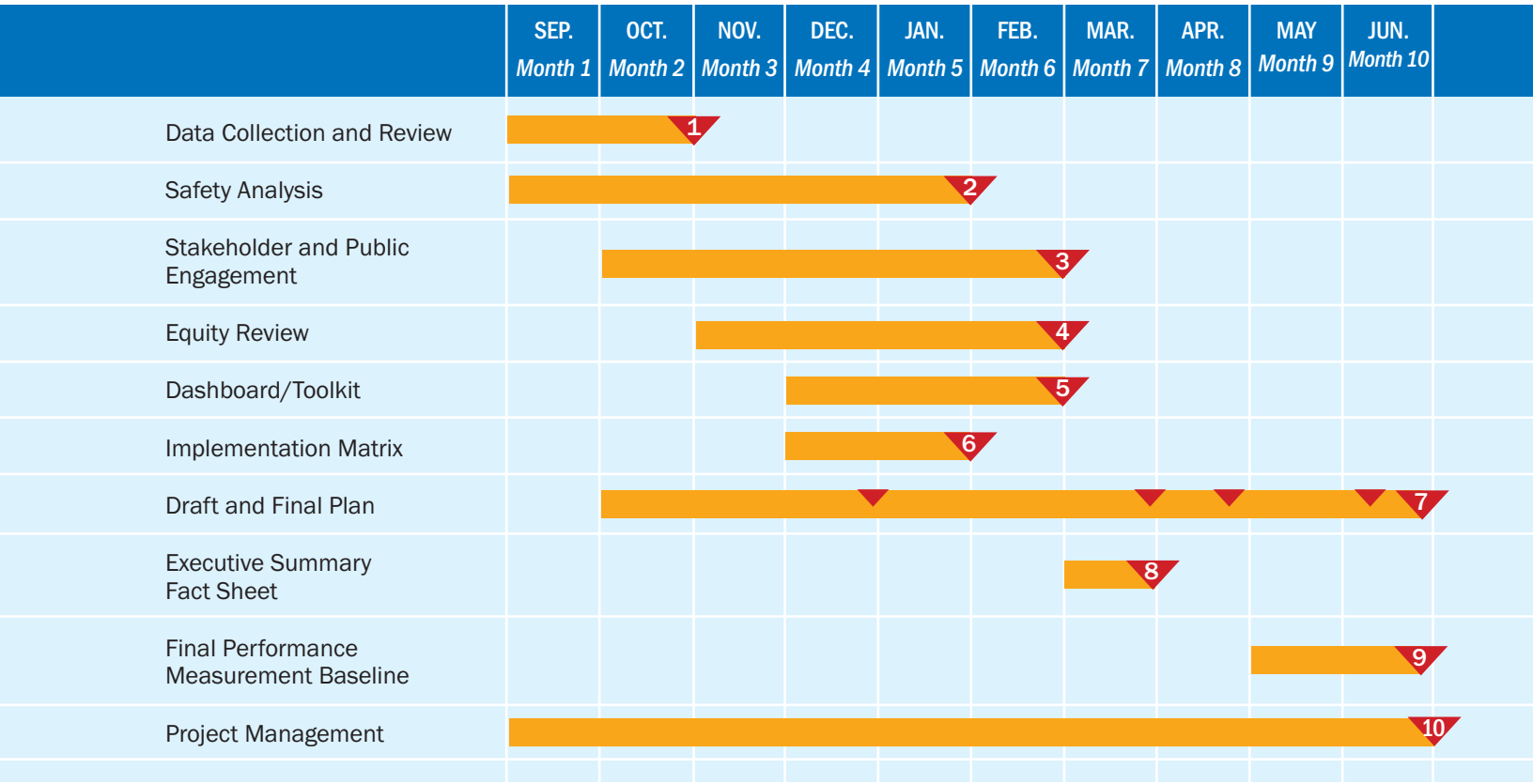

Durations in calendar days and completion milestones:

1 Data collection and review (60 days)/10/30/2024
2 Safety Analysis (120 days)/12/31/2024
3 Stakeholder and public engagement (90 days)/2/28/2025h
4 Equity review (60 days)/12/31/2024
5 Dashboard/Tool kit (90 days)/2/28/2025
6 Implementation matrix (60 days)/3/30/2025
7 Draft and final plans
- Draft plan (90 days)/12/31/2024
- Final plan (90 days)/3/31/2025
- Presentation of findings to PACOG Board 4/24/2025
- Plan adoption 6/14/2025

8 Executive Summary Fact Sheet (30 days) 3/31/2025
9 Final performance measurement baseline report (44 days) 6/14/2025
10 Project completion 6/30/2025

Schedule 4

Identification of Personnel, Subcontractors, and Task Responsibility

Excerpt from Consultant's Proposal dated July 31, 2024, Pages 29 - 43

Jake Kononov, PhD, PE

- **PhD Transportation Engineering, University of Colorado**
- **MS Transportation Engineering University of Colorado**
- **BS Civil Engineering, University of Colorado**

2006-PRESENT

Dr. Kononov is the founding Principal of DiExSys and is an internationally known expert in highway safety. Jake has over 30 years of experience in all aspects of highway and traffic engineering. As Principal of DiExSys he has provided Expert Advice, Policy Guidance, and Decision Support analysis on highway safety and traffic operations related matters to numerous Departments of Transportation and Public Road Authorities throughout the US. Jake is highly experienced in project and program management. His experience at the Colorado DOT included being responsible for Traffic Operations and Safety in the Denver Metropolitan Area and providing Traffic Engineering and Planning input for all Transportation Projects in the Denver Metropolitan Area, making presentations on traffic operations and safety related matters to the Transportation Commission and dealing with the media. Dr. Kononov also served as CDOT's Director of Research and TRB Representative. Jake chaired Transportation Research Board (TRB) Committee on Safety Management and served on Standing Committees on Safety Data Analysis and Evaluation and Highway Safety Manual (Safety Performance). Jake served on numerous research study panels at the National Cooperative Highway Research Program (NCHRP). Dr. Kononov is an author of numerous research papers on road safety published by the TRB of the National Academies, Swedish National Road and Transport Institute (VTI), German Road Research Institute (BAST), Italian Society oh Highway Infrastructure (SIIV) and Public Works Magazine. He is the lead author of Best Paper of the Year awarded by the TRB Committee on Safety Data Analysis and Evaluation. Dr. Kononov is registered Professional Engineer in Montana, Colorado and Wyoming. Dr Kononov is also an Associate Professor Adjunct at the Graduate School of Civil Engineering at the University of Colorado in Boulder.

RECENT RELEVANT PROJECT EXPERIENCE

Colorado Springs Local Roads Safety Plan in Colorado Springs, CO.
The DiExSys team has recently completed (February 2023) an LRSP for the City of Colorado Springs. Its focus was to assist the City with prioritization of safety needs through data-driven decision support analysis integrated with public involvement. Its emphasis was on congested intersections and arterials in Colorado Springs with special consideration of collectors with lower traffic volumes. Following the network screening analysis, diagnostic examination, and stakeholders' involvement, the study developed 241 safety project scopes.

Jefferson County Local Road Safety Plan in Jefferson County, CO.
In January 2022, the DiExSys team completed a LRSP for Jefferson County. Its focus was to assist the County with prioritization of safety needs through data-driven decision support analysis integrated with public involvement. Its emphasis was on congested intersections and arterials in Jefferson County with special consideration of rural county roads in mountainous and rolling terrain. Following the network screening analysis, diagnostic examination, and stakeholders' involvement, the study developed 57 safety project scopes.

Arapahoe County Local Road Safety Plan
Jake functioned as a Project Manager for all aspects of the recently completed project. Its focus was to assist the County with prioritization of safety needs on County roads thru data driven decision support analysis integrated with active public involvement. Its emphasis was on congested roads in Arapahoe County with special consideration of rural county roads with lower traffic volumes. Following network screening analysis, diagnostic examination and rigorous stakeholder's involvement the study identified 77 (seventy-seven) potential safety projects.

Douglas County Local Roads Safety Plan
Jake functioned as a Project Manager. A county-wide safety study of Douglas County was conducted by DiExSys; its intent was to identify opportunities for cost-effective road safety improvements. Its emphasis was on the non-state roads in Douglas County with special consideration of rural county roads with lower traffic volumes. County Project Manager Kathy Haire were impressed with the quality and content of deliverables which included scopes for 51 safety improvement projects rank ordered by their Benefit/Cost (B/C) ratio.

Montana Roadway Departure Safety Implementation Plan (RDSP)
Jake functioned as a Project Manager. The DiExSys-FHU team developed the Montana-Specific Safety Knowledge base for Segments comprised of 18 SPFs (9 Frequency and 9 Severity Models) and related diagnostic norms, and on its basis prepared Roadway Departure Safety Implementation Plan.

Development of VSL Algorithm I-25 Gap Project (Douglas Co, Colorado)
Jake functioned as a Project Manager. DiExSys has developed the relationships between crash rate, road/weather conditions, volume per lane and speed on I-25 south of Denver, between the Baptist Road and Plum Creek Interchanges, by direction. On the basis of these relationships DiExSys developed safety-based speed limit tables to be used in response to changing traffic conditions. Project was completed within budget and on schedule.

PUBLICATIONS (Abbreviated List)

- Kononov, J., Williams, J. and Durso, K., *Diagnostics Revisited.* Accepted for Presentation and Publication, 2020 Transportation Research Board Annual Meeting
- Kononov, J., Durso K., Lyons, C. and Allery, B. *Level of Service of Safety Revisited.* In Transportation Research Record 2514, National Research Council, Washington, D.C., 2015 pp. 10-20.
- Kononov, et al, *Relationship between Traffic Density, Speed and Safety and Its Implications for Setting Variable Speed Limits on Freeways*. In Transportation Research Record 2280, National Research Council, Washington, D.C., 2013 (presented 2012) pp. 1-10.
- Kononov, et al, *Relationship between Freeway Flow Parameters and Safety and its Implications for Hard Shoulder Running*. In Transportation Research Record 2280, National Research Council, Washington, D.C., 2013 (presented 2012) pp. 10-18.
- Kononov, et al, *Relationship between Freeway Flow Parameters and Safety and its Implications for Adding Lanes.* In Transportation Research Record 2279, National Research Council, Washington, D.C., 2013 (presented 2012) pp. 118-124.
- Kononov, J., Lyon, C and Allery, B. *Relation of Flow, Speed and Density of Urban Freeways to Functional Form of a Safety Performance Function*. In Transportation Research Record 2236, National Research Council, Washington, D.C., 2012.pp. 11-19. TRB BEST PAPER OF THE YEAR AWARD

COMMITTEES

Transportation Research Board (TRB) of National Academies

- Served as a Chairman of the TRB Standing Committee on Safety Management
- Served as Member of the TRB Standing Committee on Safety Data, Design, Analysis and Evaluation
- Served as Member of the TRB Standing Committee on Highway Safety Performance
- NCHRP Review of Truck Characteristics as Factors in Roadway Design. Served as Study Panel Chairman
- NCHRP System-wide Impact of safety and Traffic Operations Design Decisions on RRR Projects. Study Panel Member

EMPLOYMENT HISTORY

2006-2012 Director of Research, Colorado Department of Transportation (CDOT)

- Responsible for Management of Research Program at CDOT
- Representing Colorado DOT at the Transportation Research Board of the National Academies
- Identifying opportunities for new research
- Providing policy guidance on research related matters
- Setting strategic direction in the area of research
- Making recommendations on research projects at the NCHRP
- Supervising and training staff

2001-2006 Regional Traffic and Safety Engineer for the Greater Denver Metropolitan Area, Colorado Department of Transportation (CDOT) Region 6 (Now Region 1)

- Responsible for Traffic Operations and Safety in the Denver Metropolitan Area.
- Providing Traffic Engineering and Planning input for all Transportation Projects in the Denver Metropolitan Area with Combined Annual Construction budget of $400,000,000.
- Making presentations on traffic operations and safety related matters to the Transportation Commission and dealing with the media.
- Conducting public meetings and responding to elected officials.
- Supervision and training of engineers, technicians, and operations personnel (staff of 65 employees), and making manpower allocations to meet critical schedules.
- Contract negotiations with private consultants and government entities.
- Responsible for managing annual operations budget of $12,000,000.

1995-2001 State Safety Programs Engineer, CDOT Staff Traffic

- Responsible for the conceptual development and implementation of strategies and programs to improve highway safety.
- Planning and budgeting of statewide safety improvement programs. Overseeing assessment of safety needs and making recommendations for safety improvements on the statewide resurfacing program (budget $100,000,000), reconstruction, realignment and major widening projects.
- Managing the process of optimization of investments into safety improvements to maximize program-wide accident reduction within constraints of available budget.
- Providing expert advice and supporting analysis on safety related matters to six engineering regions. Analyzing statewide safety needs and providing timely input to six engineering regions to ensure early consideration of safety in the planning, scoping, design, construction and maintenance of transportation facilities.
- Participation in public meetings and responding to elected officials and public inquiries.
- Supervision and training of engineers and technicians, making manpower allocations to meet critical schedules. Contract negotiations with private consultants.
- Manage the Federal Hazard Elimination Program for the State of Colorado dealing with both CDOT and Local Agencies and the approval process of the projects.

Colorado Department of Regulatory Agencies
Division of Professions and Occupations

State Board of Licensure for Architects, Professional Engineers and Professional Land Surveyors

Yakov Kononov

Professional Engineer

PE.0025038	11/01/2023
Number	**Issue Date**
Active	10/31/2025
Credential Status	**Expire Date**

Verify this credential at: dpo.colorado.gov

Division Director: Sam Delp | Credential Holder Signature

Colorado Department of Regulatory Agencies
Division of Professions and Occupations

State Board of Licensure for Architects, Professional Engineers and Professional Land Surveyors

Yakov Kononov

Professional Engineer

PE.0025038	11/01/2023
Number	**Issue Date**
Active	10/31/2025
Credential Status	**Expire Date**

Verify this credential at: dpo.colorado.gov

Division Director: Sam Delp | Credential Holder Signature

Lookup Detail View

Licensee Information

This serves as primary source verification of the license.*

**Primary source verification: License information provided by the Colorado Division of Professions and Occupations, established by 24-34-102 C.R.S.*

Name	Public Address
Yakov Kononov	Castle Rock, CO 80104

Credential Information

License Number	License Method	License Type	License Status	Original Issue Date	Effective Date	Expiration Date
PE.0025038	Examination	Professional Engineer	Active	07/01/1987	11/01/2023	10/31/2025

Board/Program Actions

Discipline
There is no Discipline or Board Actions on file for this credential.

Generated on: 3/18/2024 9:42:09 AM

Evan Kirby, GISP

- **BA, Geography & Environmental Conservation, University of Colorado, Boulder**

Evan joined DiExSys as GIS Manager/Partner and brings 25 years of professional GIS experience to transportation planning and design projects throughout the Rocky Mountain region. Evan is highly skilled in ArcGIS at the Advanced License Level with the Spatial Analyst, 3D Analyst, and Network Analyst ArcGIS extensions. His interdisciplinary background in both the public and private sectors provides him with a wide range of GIS expertise. Evan has worked with DiExSys in several states to develop processes for the creation of GIS datasets of Level of Service of Safety and crash patterns.

RECENT RELEVANT PROJECT EXPERIENCE

Colorado Springs Local Roads Safety Plan in Colorado Springs, CO.
The DiExSys team has recently completed (February 2023) an LRSP for the City of Colorado Springs. Its focus was to assist the City with prioritization of safety needs through data-driven decision support analysis integrated with public involvement. Its emphasis was on congested intersections and arterials in Colorado Springs with special consideration of collectors with lower traffic volumes. Following the network screening analysis, diagnostic examination, and stakeholders' involvement, the study developed 241 safety project scopes.

Jefferson County Local Road Safety Plan in Jefferson County, CO.
In January 2022, the DiExSys team completed a LRSP for Jefferson County. Its focus was to assist the County with prioritization of safety needs through data-driven decision support analysis integrated with public involvement. Its emphasis was on congested intersections and arterials in Jefferson County with special consideration of rural county roads in mountainous and rolling terrain. Following the network screening analysis, diagnostic examination, and stakeholders' involvement, the study developed 57 safety project scopes.

Development of Linear Referencing System (LRS) and Crash Coding, City of Colorado Springs, Colorado
Evan served as the Project Manager and developed the process for integration of the data into VZS. Roadway segment crash analysis relies upon the ability to identify geographic locations as relative positions along a measurable line and a spatial analysis framework must first exist for these crashes to be located and identified. DiExSys has created LRS and geocoded crashes with missing coordinate information for a 5-year period, to allow the identification of crashes along measurable lines for use in crash pattern and Level of Service of Safety analysis in Vision Zero Suite software

Montana Roadway Departure Safety Implementation Study – Crash Patterns, Level of Service of Safety, Intersection Dataset Creation and Crash Coding for Network Screening, Statewide, Montana DOT
Evan was responsible for the creation of a process for consuming raw outputs from DiExSys' Vision Zero Suite crash pattern and Level of Service of Safety modeling for the creation of spatial datasets for roadway segments and statewide maps. Evan developed a database of state highway intersections, consisting of over 15,000 records attributed by intersection leg with AADT, road name, corridor number, number of through lanes, signalization, and divided versus undivided roadway. This information was used for the development of intersection Safety Performance Functions. Tasks included the coding of side road crashes at highway intersections to the on-system linear referencing network and creation of highway-with-highway reference post information for secondary highways at intersections in support of network screening processes performed in Vision Zero Suite.

Arapahoe, Douglas, Jefferson, and Mesa Counties 405(c) Crash Coding and Linear Referencing System Development, Colorado
Roadway segment crash analysis relies upon the ability to identify geographic locations as relative positions along a measurable line and a spatial analysis framework must first exist for these crashes to be located and identified. DiExSys geocoded crashes with missing coordinate information for a 5-year period and developed a linear referencing system for collector and above roadways to allow the identification of crashes along measurable lines for use in crash pattern and Level of Service of Safety analysis in Vision Zero Suite software. Evan served as the Project Manager and developed the process for integration of the data into the proprietary software.

Rapid City Arterial Safety Study, Rapid City, South Dakota
Developed the underlying GIS methodology and tools for conducting the arterial street segment safety analyses. The top 10 arterial crash segments within the City were identified utilizing the City's GIS database and the critical crash rate method as outlined in the Highway Safety Manual. The top crash segment list and possible mitigation measures were presented to the public through an open house to obtain feedback and address the citizen's concerns regarding arterial safety within Rapid City.

CDOT Crash Pattern and Level of Service of Safety for Intersections and Highway Segments, Colorado Department of Transportation, Colorado
Evan has developed a process to convert crash pattern and Level of Service of Safety model outputs from Vision Zero Suite to detailed GIS datasets for both highway segments and intersections. Products included detailed crash pattern data for over 30 crash pattern types and level of service of safety for all crashes and severe crashes (injury + fatal) for highways throughout Colorado. This data was integrated into CDOT's secure ArcGIS Online site for use by CDOT's Safety Division. GIS support is also being provided on safety assessments and before and after studies.

EMPLOYMENT HISTORY

2006-2019 GIS and Data Science Manager, FHU

- Evan gained experience on numerous statewide transportation planning studies, including the State Freight and Passenger Rail and Statewide Transportation Plans. In his time at FHU, Evan collaborated with DiExSys as a subconsultant on statewide and local roadway safety projects in Colorado, Wyoming, and Montana for six years.

1999-2006 GIS Group Manager, JF Sato and Associates

- Evan was responsible for GIS support for major EA/EIS projects on I-70 Mountain Corridor and planning and design of transportation projects.

1995-1999 GIS Analyst, Dames and Moore

- Evan was responsible for GIS support for Oil and Gas Industry and Environmental Mitigation projects.

Richard Sarchet, MS., P.E.

- **MS Civil Engineering, Transportation Focus, University of Colorado, Denver, CO**
- **BS Civil Engineering, University of Colorado, Denver, CO**
- **BS Business Administration, University of Northern Colorado, Greeley**

2015-PRESENT

Rich joined DiExSys as a Senior Transportation Safety Engineer/Partner. Rich has over 20 years of transportation engineering experience at CDOT, with 15 of those years focused on safety and traffic operations. From 2011 through 2015 Rich worked as Region 3 Traffic Operations Engineer addressing multidisciplinary problems of safety and mobility unique to Western Colorado. He has evaluated hundreds of intersections, interchanges freeways and arterial segments and identified thousands of opportunities for crash reduction and optimization of traffic operations.

RECENT RELEVANT PROJECT EXPERIENCE

Colorado Springs Local Roads Safety Plan in Colorado Springs, CO.
The DiExSys team has recently completed (February 2023) an LRSP for the City of Colorado Springs. Its focus was to assist the City with prioritization of safety needs through data-driven decision support analysis integrated with public involvement. Its emphasis was on congested intersections and arterials in Colorado Springs with special consideration of collectors with lower traffic volumes. Following the network screening analysis, diagnostic examination, and stakeholders' involvement, the study developed 241 safety project scopes.

Jefferson County Local Road Safety Plan in Jefferson County, CO.
In January 2022, the DiExSys team completed a LRSP for Jefferson County. Its focus was to assist the County with prioritization of safety needs through data-driven decision support analysis integrated with public involvement. Its emphasis was on congested intersections and arterials in Jefferson County with special consideration of rural county roads in mountainous and rolling terrain. Following the network screening analysis, diagnostic examination, and stakeholders' involvement, the study developed 57 safety project scopes.

Arapahoe County Local Road Safety Plan
Rich functioned as a senior safety engineer for all aspects of the recently completed project. Its focus was to assist the County with prioritization of safety needs on County roads thru data driven decision support analysis integrated with active public involvement. Its emphasis was on congested roads in Arapahoe County with special consideration of rural county roads with lower traffic volumes. Following network screening analysis, diagnostic examination and rigorous stakeholder's involvement the study identified 77 (seventy-seven) potential safety projects.

Douglas County Local Roads Safety Plan
Rich functioned as a senior safety engineer. A county-wide safety study of Douglas County was conducted by DiExSys; its intent was to identify opportunities for cost-effective road safety improvements. Its emphasis was on the non-state roads in Douglas County with special consideration of rural county roads with lower traffic volumes. County Project Manager Kathy Haire were impressed with the quality and content of deliverables which included scopes for 51 safety improvement projects rank ordered by their Benefit/Cost (B/C) ratio.

Montana Roadway Departure Safety Implementation Plan (RDSP)
Rich functioned as a senior safety engineer. The DiExSys-FHU team developed the Montana-Specific Safety Knowledge base for Segments comprised of 18 SPFs (9 Frequency and 9 Severity Models) and related diagnostic norms, and on its basis prepared Roadway Departure Safety Implementation Plan.

Development of Variable Speed Limit (VSL) Algorithm I-25 Gap Project (Douglas Co, Colorado)
Rich functioned as a senior safety engineer. DiExSys has developed the relationships between crash rate, road/weather conditions, volume per lane and speed on I-25 south of Denver, between the Baptist Road and Plum Creek Interchanges, by direction. On the basis of these relationships DiExSys developed safety-based speed limit tables to be used in response to changing traffic conditions. Project was completed within budget and on schedule.

ACADEMIC ACTIVITIES

- Member, Transportation Research Board of the National Academies NCHRP Project 12-90 Guidelines for Shielding Bridge Piers Research Oversight Panel. 2011 - 2020
- Member, Transportation Research Board of the National Academies SHRP2 Study SO2 Integrate Methods and Develop Analysis Plan Safety Expert Task Group 2008 - 2009
- Instructor, Highway Engineering (CET-4150) Metropolitan State University, Spring 2010 and Fall 2010
- Instructor, Transportation Impacts Assessment (CE-5612), CU Denver, Spring 2009
- Presenter, TRB National Roundabout Conference, Vail, Colorado, 2005
- Presenter, Missouri Valley ITE Conference, Topeka, Kansas, 2006

EMPLOYMENT HISTORY

Colorado Department of Transportation (1993 – 2015)
Region 3 Traffic Operations Engineer (PE-II)(Since 2011)

- Represented CDOT in Colorado Motor Carriers/CDOT/Colorado State Patrol coordination meetings.
- Represented R3 in I-70 Mountain Corridor Coordination Meetings with CDOT Maintenance Sections 2 and 9, R1, and TSMO, local and county law enforcement representatives from Clear Creek , Summit and Eagle Counties, Heavy Tow, Courtesy Patrol, Chain Assist, resorts, CMCA, FHWA and CSP as we work together to improve operations on I-70 (especially in Winter).
- Led I-70 Mountain Corridor Operations Effort during winter storms with peak Sunday traffic as the Operations Manager. This involves coordinating maintenance plowing efforts, EJMT operations (including CFM, pushing-up spinouts, and hazmat staging), CSP efforts, manual and automated ramp metering.
- Managed a team of 29 including professional engineers, electricians, engineering technicians and maintenance workers to operate and maintain all signals, roadway lighting, highway signing and striping in a western Colorado region, with an emphasis on improving public and worker safety. This work included determining annual goals and priorities and administering approximately $12 million/year budget. Participated in review and approval process for large development projects, which included cooperation and negotiation with the developers and with FHWA for interstate access approvals.
- Met with county commissioners in all R3 counties at least annually and with city and town councils when they had operational questions or concerns or when we planned work that would affect them.

Region 4 Traffic, Design and Local Agency Engineer (PE-I) (2010 – 2011)

- Designed Highway Safety Improvement projects, primarily guardrail, cable barrier and rumble strips
- Reviewed fatal crash and high crash frequency locations for potential countermeasures.
- Provided engineering, project delivery and project management assistance to approximately 65 Local Agencies in design and construction of Federal-Aid projects.

Safety Research Engineer, Research Branch (PE-I)(2006 –2010)

- Administered research program in Traffic Operations, Driver Behavior, Traffic Safety, Worker Safety and Risk Analysis topic areas, including preparation and review of scope and budget, selection of principal investigator (University or Consulting Research Professional), review and approval of progress reports, invoices and final report.
- Safety risk-analysis of proposed design alternatives, for example buffer separated or barrier separated High Occupancy/Toll facilities.

Assistant Traffic Operations Engineer, Region 1 Traffic (PE-I)(2005 –2006)

- Solve operational problems including signal timing (progression, emergency vehicle and railroad preemption, transit vehicle priority), striping, signing, roadway lighting, construction/maintenance traffic control and other safety issues.
- Design, review and/or perform traffic signal plans (and warrant studies), hazard elimination (HES) projects/plans, speed limit studies, special event (parade, race, etc.) permits, and guide sign permits. Also review construction project plans and highway access permit applications for operational and safety issues.
- As Interim, supervise unit of approximately 20, including professional engineers, electricians and maintenance workers to maintain signals, lighting, signs and stripes. This assignment includes hiring, and resolving personnel issues through coaching.

Traffic Safety Analyst, Headquarters Safety and Traffic Branch (PE-I/Engineer)(2001-2005)

- Performed statistical safety analysis and accident prediction modeling of the existing facilities and prepared risk analysis (safety and operational) of proposed alternatives for urban freeway corridor EISs.
- Developed statistical analysis tools and analyzed accident history data statewide to identify accident patterns with high potential for cost effective countermeasures, so that available safety funds could be spent to maximum effect.
- Assessed safety performance of existing facilities and recommended specific cost effective safety improvements, appropriate to the scope, in conjunction with planned construction and resurfacing projects statewide.
- Reviewed, prioritized and recommended for funding safety enhancement projects under the federal HES Hazard Elimination program.
- Performed a statistical before/after analysis of the effects of signalization on safety of intersections on Colorado State Highways and produced a White Paper on those impacts.

Engineering Technician, Loveland Engineering Residency (1994 – 2000)

- Construction project management, including acting as project manager on an interchange reconstruction project ($22,000,000 budget).
- Construction documentation including as constructed plans and pay item documentation
- Materials testing of asphalt, concrete and soils in field and central laboratory settings.
- Final materials documentation review for all Region 4 Construction Residencies
- Design and drafting of resurfacing/minor widening projects.
- Topographic surveying

Lookup Detail View

Licensee Information

This serves as primary source verification of the license.*

**Primary source verification: License information provided by the Colorado Division of Professions and Occupations, established by 24-34-102 C.R.S.*

Name	Public Address
Richard Goetsch Sarchet	Fruita, CO 81521-7445

Credential Information

License Number	License Method	License Type	License Status	Original Issue Date	Effective Date	Expiration Date
PE.0037618	Examination	Professional Engineer	Active	06/03/2003	01/04/2024	10/31/2025

Board/Program Actions

Discipline
There is no Discipline or Board Actions on file for this credential.

Generated on: 3/18/2024 9:31:51 AM

Ben Kiene, PE

- **MS, Civil Engineering, University of Colorado, Denver**
- **BS, Civil Engineering, Colorado State University, Fort Collins**

2023-PRESENT

Ben joined DiExSys as a Senior Traffic Safety Engineer in November 2023 following 19.5 years with CDOT's Region 1 Traffic and Safety office, including 5.5 years as a Resident Engineer. He was responsible for the management of the Region's traffic control devices; identification and delivery of traffic safety and traffic asset management projects; communication with members of the public on traffic safety and operations topics; and day-to-day operations and monitoring of traffic signal and signing and markings programs. He advised more than 100 CDOT project teams on the incorporation of safety improvements in his traffic engineering support roles for the Region's capital project delivery program and assisted in the development of statewide safety and pedestrian policies.

RECENT RELEVANT PROJECTS

Colorado Springs Local Roads Safety Plan in Colorado Springs, CO.
The DiExSys team has recently completed (February 2023) an LRSP for the City of Colorado Springs. Its focus was to assist the City with prioritization of safety needs through data-driven decision support analysis integrated with public involvement. Its emphasis was on congested intersections and arterials in Colorado Springs with special consideration of collectors with lower traffic volumes. Following the network screening analysis, diagnostic examination, and stakeholders' involvement, the study developed 241 safety project scopes.

Jefferson County Local Road Safety Plan in Jefferson County, CO.
In January 2022, the DiExSys team completed a LRSP for Jefferson County. Its focus was to assist the County with prioritization of safety needs through data-driven decision support analysis integrated with public involvement. Its emphasis was on congested intersections and arterials in Jefferson County with special consideration of rural county roads in mountainous and rolling terrain. Following the network screening analysis, diagnostic examination, and stakeholders' involvement, the study developed 57 safety project scopes.

Colorado Springs Intersection and Roadway Safety Study in Colorado Springs, CO.
Ben conducted crash data analysis, site observation, crash countermeasure research and recommendations, project implementation economic analyses, and report preparation for 15 urban arterial corridors in Colorado Springs. These studies are the first of their kind for Colorado, using newly developed urban arterial corridor SPFs to gain a complete understanding of the safety characteristics of urban streets.

Corpus Christi Regional Safety Action Plan, Safe
Streets for All (SS4A) in Corpus Christi, TX. The DiExSys team is currently working with the City of Corpus Christi, Texas, to develop a Safe Streets for All Action Plan. Ben developed the High Injury Network identifying sites with high likelihood for benefit from cost-effective crash reduction measures for the Corpus Christi MPO and performed network screening to identify severe and vulnerable road user crash pattern locations within the MPO boundaries. Selected sites are currently under study for development of appropriate crash countermeasures and safety projects to be implemented through the SS4A program.

CDOT Region 1 Bicycle and Pedestrian Safety Study across Region 1 for CDOT, CO.
Ben oversaw the development of Region 1's first network-wide assessment of bicycle and pedestrian safety in 2022. This study combined crash data investigation with assessment of existing roadway infrastructure and input from public meetings and surveys to prioritize vulnerable road user safety improvements at state highway locations. The highest-ranking projects have since received funding and are proceeding to construction.

CDOT Region 1 Traffic and Safety Strategic Plan across Region 1 for CDOT, CO.
Between 2018 and 2023, Ben identified and directed the installation of various low-cost safety improvements conducted by CDOT traffic maintenance staff. Improvements included installation of rapid rectangular flashing beacons (RRFB) at mid-block and trail crossing locations, pedestrian hybrid beacons (PHB) at a multilane mid-block crosswalk, and an upgrade of traffic signal left turn treatments (protected-only or pedestrian-activated protected left turn) at intersections found to have elevated levels of conflict between left turning vehicles and pedestrians.

Lookup Detail View

Licensee Information

This serves as primary source verification of the license.*

**Primary source verification: License information provided by the Colorado Division of Professions and Occupations, established by 24-34-102 C.R.S.*

Name	Public Address
Benjamin Glen Kiene	Denver, CO 80211

Credential Information

License Number	License Method	License Type	License Status	Original Issue Date	Effective Date	Expiration Date
PE.0043281	Examination	Professional Engineer	Active	06/25/2009	11/01/2023	10/31/2025

Board/Program Actions

Discipline
There is no Discipline or Board Actions on file for this credential.

Generated on: 3/18/2024 9:38:13 AM

James S. Williams, P.E.

- **B.A. Mathematics, University of Colorado, Boulder, CO**

2016-PRESENT

Jim Williams, PE, is Senior Safety Analyst/Partner at DiExSys. He has over 25 years of experience in all aspects of Transportation Engineering. During his career at DiExSys he developed hundreds of crash prediction models (SPFs) and calibrated LOSS boundaries of segments and intersections for CDOT, Alabama DOT, Montana DOT and Louisiana DOT. Jim has pioneered new modeling techniques which resulted in improved goodness of fit in SPF modeling. He has a strong background in predictive analytics and is intimately familiar with crash records and databases. During his time at CDOT, Jim worked in the staff traffic, staff design and cost estimating unit, where he designed highway projects, developed sophisticated databases to provide decision support analysis. Jim is an expert user of VZS.

RECENT RELEVANT PROJECT EXPERIENCE

Colorado Springs Local Roads Safety Plan in Colorado Springs, CO.
The DiExSys team has recently completed (February 2023) an LRSP for the City of Colorado Springs. Its focus was to assist the City with prioritization of safety needs through data-driven decision support analysis integrated with public involvement. Its emphasis was on congested intersections and arterials in Colorado Springs with special consideration of collectors with lower traffic volumes. Following the network screening analysis, diagnostic examination, and stakeholders' involvement, the study developed 241 safety project scopes.

Jefferson County Local Road Safety Plan in Jefferson County, CO.
In January 2022, the DiExSys team completed a LRSP for Jefferson County. Its focus was to assist the County with prioritization of safety needs through data-driven decision support analysis integrated with public involvement. Its emphasis was on congested intersections and arterials in Jefferson County with special consideration of rural county roads in mountainous and rolling terrain. Following the network screening analysis, diagnostic examination, and stakeholders' involvement, the study developed 57 safety project scopes.

Arapahoe County Local Road Safety Plan
Jim functioned as a senior safety analyst of the recently completed project. Its focus was to assist the County with prioritization of safety needs on County roads thru data driven decision support analysis integrated with active public involvement. Its emphasis was on congested roads in Arapahoe County with special consideration of rural county roads with lower traffic volumes. Following network screening analysis, diagnostic examination and rigorous stakeholder's involvement the study identified 77 (seventy-seven) potential safety projects.

Douglas County Local Roads Safety Plan
Jim functioned as a senior safety analyst/engineer. A county-wide safety study of Douglas County was conducted by DiExSys; its intent was to identify opportunities for cost-effective road safety improvements. Its emphasis was on the non-state roads in Douglas County with special consideration of rural county roads with lower traffic volumes. County Project Manager Kathy Haire were impressed with the quality and content of deliverables which included scopes for 51 safety improvement projects rank ordered by their Benefit/Cost (B/C) ratio.

Montana Roadway Departure Safety Implementation Plan (RDSP)
Jim functioned as a senior safety analyst. The DiExSys team developed the Montana-Specific Safety Knowledge base for Segments comprised of 18 SPFs (9 Frequency and 9 Severity Models) and related diagnostic norms, and on its basis prepared Roadway Departure Safety Implementation Plan.

Development of Variable Speed Limit (VSL) Algorithm I-25 Gap Project (Douglas Co, Colorado)
Jim functioned as a senior safety analyst. DiExSys has developed the relationships between crash rate, road/weather conditions, volume per lane and speed on I-25 south of Denver, between the Baptist Road and Plum Creek Interchanges, by direction. On the basis of these relationships DiExSys developed safety-based speed limit tables to be used in response to changing traffic conditions. Project was completed within budget and on schedule.

PUBLICATIONS

- Kononov, J., Williams, J. and Durso, K., *Diagnostics Revisited.* Accepted for Presentation and Publication, 2020 Transportation Research Board Annual Meeting

EMPLOYMENT HISTORY

2000-2016 Project Engineer, Staff Traffic, Colorado Department of Transportation Safety Engineer

- Performing assessment of safety needs and making recommendations for safety improvements on the statewide resurfacing program, reconstruction, realignment and major widening projects.
- Managing the process of optimization of investments into safety improvements to maximize program-wide accident reduction within constraints of available budget.
- Providing expert advice and supporting analysis on safety related matters to six engineering regions. Analyzing statewide safety needs and providing timely input to six engineering regions to ensure early consideration of safety in the planning, scoping, design, construction and maintenance of transportation facilities. Local Agencies coordination.

1995-2000 Project Engineer, Cost Estimating Unit, Colorado Department of Transportation

- Responsible for cost estimation quality control, developed statistical models used for analyzing bid data for various purposes including detecting collusion and bid rigging.

1990-1995 Project Engineer, Staff Design, Colorado Department of Transportation

- Solving design related problems and constructability issues during construction. Oversaw design changes and associated contract modifications in the field.
- Responsible for the design of transportation projects, including complex interchanges and intersections, design of overlays, rehabilitation, realignment and widening.
- Provided technical support for the Environmental Assessments and public involvement.
- Carried out pavement design, hydraulic design, highway lighting design. Prepared construction estimates, plans and specifications.
- Conducted project scoping and developed requests for proposals for work performed by private consultants. Performed work hour estimation, contract negotiations and project management. Reviewed work performed by private consultants and approved monthly billings. Supervised engineers and technicians.
- Made key decisions on complex projects. Carried out manpower allocations in the design office to meet critical schedules and provided quality management.
- Managed development of scopes of work and requests for proposals for consultant services. Participated in the consultant selection. Directed work hour estimation and contract negotiations with consulting firms. Oversaw monthly progress reports and billings on consultant's contracts.

Lookup Detail View

Licensee Information

This serves as primary source verification of the license.*

**Primary source verification: License information provided by the Colorado Division of Professions and Occupations, established by 24-34-102 C.R.S.*

Name	Public Address
James Scott Williams	DENVER, CO 80230

Credential Information

License Number	License Method	License Type	License Status	Original Issue Date	Effective Date	Expiration Date
PE.0024409	Examination	Professional Engineer	Active	07/01/1986	11/01/2023	10/31/2025

Board/Program Actions

Discipline
There is no Discipline or Board Actions on file for this credential.

Generated on: 3/18/2024 9:34:50 AM

Gillian McCarthy, PE

- **MS Eng. in Civil Engineering University of Delaware, Aug 2012 (GPA 3.7)**
- **BS Eng. in Structural Engineering, Cork Institute of Technology (Ireland), Jun 2010 (2:1 Hons)**
- **BA in Music & Italian, University College Cork (Ireland)**

2021-PRESENT

During her career at CDOT Gillian worked on safety analysis and preparing safety assessment reports in the Traffic and Safety group at HQ. She joined DiExSys in 2021. During here work at DiExSys she prepared safety assessment reports and worked on City of Colorado Springs Local Road Safety Plan, Jefferson County Local Road Safety Plan, Alabama DOT Safety Study, Arkansas DOT Rural Intersection Safety Study, Clackamas County, Oregon Safety Study and SS4A Comprehensive Safety Action Plan for Corpus Christi MPO.

RECENT RELEVANT PROJECT EXPERIENCE

Colorado Springs Local Roads Safety Plan in Colorado Springs, CO.
The DiExSys team has recently completed (February 2023) an LRSP for the City of Colorado Springs. Its focus was to assist the City with prioritization of safety needs through data-driven decision support analysis integrated with public involvement. Its emphasis was on congested intersections and arterials in Colorado Springs with special consideration of collectors with lower traffic volumes. Following the network screening analysis, diagnostic examination, and stakeholders' involvement, the study developed 241 safety project scopes.

Jefferson County Local Road Safety Plan in Jefferson County, CO.
In January 2022, the DiExSys team completed a LRSP for Jefferson County. Its focus was to assist the County with prioritization of safety needs through data-driven decision support analysis integrated with public involvement. Its emphasis was on congested intersections and arterials in Jefferson County with special consideration of rural county roads in mountainous and rolling terrain. Following the network screening analysis, diagnostic examination, and stakeholders' involvement, the study developed 57 safety project scopes.

Arkansas DOT Rural Intersection Safety Study
Gillian has conducted network screening and prepared safety assessment reports for 75 (Seventy Five) rural intersections. The work included SPF analysis, Diagnostic, Countermeasure Development, Benefit/Cost Analysis and Project Management.

Colorado Springs Local Roads Safety Plan
DiExSys team has recently completed (February 2023) a Local Road Safety Plan for the City of Colorado Springs. Its focus was to assist the City with prioritization of safety needs through data driven decision support analysis integrated with public involvement. Its emphasis was on congested intersections and arterials in Colorado Springs with special consideration of collectors with lower traffic volumes. Following network screening analysis, diagnostic examination, and stakeholder's involvement, the study developed 168 (one hundred and sixty-eight) safety project scopes.

Jefferson County Local Roads Safety Plan
In January of 2022 DiExSys team has completed a Local Road Safety Plan for Jefferson County, Colorado. Its focus was to assist the County with prioritization of safety needs through data driven decision support analysis integrated with public involvement. Its emphasis was on congested intersections and arterials in Jefferson County with special consideration of rural county roads in mountainous and rolling terrain. Following network screening analysis, diagnostic examination, and stakeholder's involvement, the study developed 57 (fifty-seven) safety project scopes (Figure below).

Lookup Detail View

Licensee Information

This serves as primary source verification of the license.*

**Primary source verification: License information provided by the Colorado Division of Professions and Occupations, established by 24-34-102 C.R.S.*

Name	Public Address
Gillian M McCarthy	Castle Rock, CO 80104

Credential Information

License Number	License Method	License Type	License Status	Original Issue Date	Effective Date	Expiration Date
PE.0062771	Examination	Professional Engineer	Active	06/14/2023	11/01/2023	10/31/2025

Board/Program Actions

Discipline
There is no Discipline or Board Actions on file for this credential.

Generated on: 3/18/2024 9:36:40 AM

Catherine S. Durso, Ph.D.

- **Ph.D. & MA – Mathematics, Massachusetts Institute of Technology (MIT),Cambridge, MA**
- **BA Mathematics, Princeton University, Princeton, NJ**

2016-PRESENT

Dr. Durso joined DiExSys team as a contract employee in a role of Senior Statistician assisting with development of Accident Prediction Models, Advanced Diagnostic Tools and Artificial Intelligence Algorithms. She is also actively involved in applying statistical analysis to the applied problems of roadway safety and traffic operations. She has extensive experience in the area of applied statistics and mathematical modeling with focus on highway safety. Dr. Durso has coauthored a number of research papers on highway safety with Jake Kononov, Bryan Allery and Jim Williams.

RECENT RELEVANT PROJECTS

Development of Variable Speed Limit (VSL) Algorithm I-25 Gap Project (Douglas Co, Colorado)
Dr. Durso functioned as Senior Statistician. DiExSys has developed the relationships between crash rate, road/weather conditions, volume per lane and speed on I-25 south of Denver, between the Baptist Road and Plum Creek Interchanges, by direction. On the basis of these relationships DiExSys developed safety-based speed limit tables to be used in response to changing traffic conditions. Project was completed within budget and on schedule.

Development of Variable Speed Limit (VSL) Algorithm I-70 Mountain Express Lane, Colorado Department of Transportation, Region-1
Dr. Durso functioned as Senior Statistician. DiExSys has developed the relationships between crash rate, road/weather conditions, volume per lane and speed on I-25 south of Denver, between the Baptist Road and Plum Creek Interchanges, by direction. On the basis of these relationships DiExSys developed safety-based speed limit tables to be used in response to changing traffic conditions. Project was completed within budget and on schedule.

Explicit Consideration of Safety in the Transportation Planning Process – Development of New Methodology, CDOT, DTD
Dr. Durso functioned as Senior Statistician. This federally funded project developed a new applied methodology for incorporating of safety into statewide transportation planning process. It was very well received by CDOT and its local planning partners.

LIST OF PUBLICATIONS

- A Closer Look at Highway Safety Diagnostics and Crash Analysis, Kononov, J., Williams, J., Durso, C., Transportation Research Record, Vol. 2674, Issue 5, pp. 1-11 April 2020
- Level of Service of Safety Revisited, Kononov, J., Durso, C., Lyon, C., Allery, B., Transportation Research Record: Journal of the Transportation Research Board, Jan 2015, Vol. 2514, pp. 10-20
- The Rise and Fall of Value-Added Models for Teacher Evaluation, panelists Briggs, D, Durso, C, Lockwood, J.R, Rothstein, J, contributed panel, Joint Statistical Meeting, San Diego, CA, July 29, 2012
- Relationship between Traffic Density, Speed and Safety and Its Implication on Setting Variable Speed Limits on Freeways, Kononov, J., Durso, C., Reeves, D., Allery, B., Transportation Research Record, Journal of the Transportation Research Board of the National Academies, Washington, D.C. No. 2280, pp. 1–9. Dec 2012
- Relationship between Freeway Flow Parameters and Safety and Its Implication on Adding Lanes, Kononov, J., Reeves, D., Durso, C., Allery, B., Transportation Research Record : Journal of the Transportation Research Board of the National Academies, Washington D.C. ,No. 2279, pp. 118-123, Dec 2012

EMPLOYMENT HISTORY

Research Statistician, Center for Statistics and Visualization, University of Denver, 2014-present

- Development and review of study design
- Development and review of data analysis plans
- Development and review of data analytical exposition

Statistical Consultant, 2010-present

- Development and review of study design, data analysis plans, data analytical exposition
- Development and exposition of statistical models
- Statistical computing

Chief Scientist, Medallion Learning, 2012-2016

- Planning of data capture
- Learning analytics
- Data-informed assessment design

Lecturer, Department of Computer Science, University of Denver 2001-present
With title of Full Teaching Professor, 2019-present

Courses taught include

- Data Analysis and Inference
- Performance Analysis: Queuing Theory and Reliability
- Algorithms and Data Structures, Advanced Algorithms and Data Structures
- Computer programming
- Bioinformatics Algorithms
- Discrete Mathematics for Computer Science, Advanced Discrete Mathematics for Computer Science

Andrew Janzen, MS

- **MS, Electrical Engineering, California Institute of Technology, 4.0 GPA**
- **BS, Electrical Engineering, George Fox University, summa cum laude**

2016-PRESENT

Andrew earned a Masters in Electrical Engineering with honors in 2016. Afterward, he worked on microwave and optical space communications at NASA's Jet Propulsion Laboratory before co-founding Street Simplified in 2016. Since then, Andrew has worked closely with hundreds of agencies and transportation leaders, and scores of industry executives to hone street-safety analytics and deliver on every project.

RECENT RELEVANT PROJECTS

US-6 & Rasor Drive in Keystone, CO.
Street Simplified conducted a safety study over a four-day period in collaboration with CDOT. The primary objective was to determine the level and frequency of pedestrian safety risk crossing US-6. There is a nearby ski resort and this study was conducted during ski season. In only four days, there were over 1,000 near-crash events between vulnerable road users and through moving vehicles, where the vulnerable road user was not in compliance.

Astrozon and Academy in Colorado Springs, CO.
During this city-wide network screening, Street Simplified conducted in-depth conflict analysis using AI cameras.

50 Studies focused on Vulnerable Road Users; Various Locations in Fairfax County, VA.
As prime contractor, Street Simplified partnered with the Fairfax team through their Innovation Challenge. This project focused on the needs of vulnerable road users at 37 locations. Post-studies will be conducted at 13 of those locations once changes have been implemented.

Ten-Location Tech Firm Vision Zero Pilot Project in Austin, TX.
As prime contractor, Street Simplified partnered with AECOM to complete this project involving ten studies. This work was conducted with other technology firms to test the efficacy of predictive technology.

Corridor Study of Nine Locations in Volusia County, FL.
In this joint study with Kimley Horn, Andrew led the Street Simplified team in analyzing nine intersections along a 2.5-mile stretch of Saxon Blvd. in Volusia County, FL.

Benjamin Griffard

2020-PRESENT

Benjamin Griffard, part owner and first employee of Street Simplified, is the company's Vice President of Safety. In addition to helping Street Simplified grow by 5x and increase production by 10x, Ben has presented the company's technology at conferences and is working on traffic safety with agencies across North America. We have now worked at more than 600 locations in 25 states. Previously in manufacturing, Ben spent several years focusing on business development with strategic industry partners and he continues this effort at Street Simplified.

RECENT RELEVANT PROJECTS

Volusia County, FL.
Partnering with Kimley Horn, Ben initiated this project in a commercially developed suburb near the Daytona 500 Speedway. This unique and exciting analysis of a three quarter-mile corridor, split in half by a freeway and book-ended by two busy arterials, has shaped our understanding of traffic in densely populated areas. We are working with engineers to understand and mitigate such conditions as multilane intersection blocking, chronic red light running, rampant speeding, extreme congestion, and near-crashes between vehicles, as well as near-crashes between vehicles and pedestrians. The project has opened opportunities to work with Kimley Horn in multiple states.

Atlanta, GA.
Partnering with Toole Design, Street Simplified recently won a competitive bid to help the city of Atlanta, Georgia, support their Vision Zero initiative. This long-term strategic partnership, organized by Ben, will be conducting safety studies at multiple locations in and around Atlanta, ensuring our continued work there for years to come.

Pinal County, AZ.
For this project, Street Simplified joined with Lee Engineering Services to focus on five high-crash "hot spots," selected for their key statistical impact within Pinal County, Arizona. The project focused on aggressive driver behavior, particularly the risk factors of speeding, red light running, and near-crashes.

Nora Neureiter, MPA

- **M.P.A., Lyndon B. Johnson School of Public Affairs, University of Texas, Austin,TX, 1991**
- **B.A., Government, Smith College, Northampton, MA, 1989**

2021-PRESENT

Nora Neureiter has over 20 years of experience in public policy, communications, and constituent relations and is OV's Manager of Communications and Engagement. Her projects combine a multi- phased approach to educate the public on project goals and gather input on a project vision early in the process, with ample opportunity for individual property owners, businesses, advocacy groups, and diverse community members to provide feedback at key project milestones. Nora has experience combining asynchronous input tools (surveys and mapping tools) with public meetings, advisory groups, focus groups, and community pop-ups to ensure robust and inclusive community engagement..

RECENT RELEVANT PROJECTS

13th Avenue Multi-modal Mobility Study, Aurora, CO 2021-2022
Nora created a Public Engagement Strategy for the 13th Avenue multi-modal mobility study in Aurora, CO, including support for a Technical Advisory Committee, a Stakeholder Advisory Committee, community surveys, virtual and in-person public meetings, and a tactical urbanism demonstration.

Central Community Transportation Network Planning| City and County of Denver | 2020-2022
Nora provided public engagement for the Community Transportation Network Planning in central Denver. This included extensive, multi-format outreach for improvements to pedestrian, bike, transit, and street safety. Engagement tools included a Community Task Force, online surveys, virtual public meetings, focus groups, project office hours, a dedicated project newsletter, and a robust project website.

Denver Moves: Cherry Creek Mobility Plan, City and County of Denver 2022-2023
Nora led the community engagement for the Denver Moves: Cherry Creek Mobility Plan which included diverse and broad outreach ranging from intercept and digital surveys, to pop-ups, workshops and public meetings, as well as a large Steering Committee and hard-to-reach focus groups.

Main Street Master Plan Longmont, CO, 2019
Nora supported the public engagement strategy the Main Street Master Plan in Longmont, CO. The strategy included large-scale public meetings, community tabling events, online surveys, a Stakeholder Working Group, and small business outreach on Main Street.

73rd Avenue Concept and Final Design, Adams County 2022-2023
Nora crafted and carried out an engagement strategy to design safety improvements to 73rd Avenue in Adams County including public meetings, a door-to-door information campaign, managing a project hotline and dedicated community liaison, website updates, and constituent meetings with long standing residents of the corridor.

US287 Bus Rapid Transit Feasibility Study, Boulder County, CO 2021-2022
Nora led public engagement for the US287 Bus Rapid Transit Feasibility Study in Boulder County, consisting of a multi-jurisdiction Working Group, virtual .

Reese Shaw, MS

- **Master of Urban & Regional Planning, University of Colorado, Denver, 2022**
- **Bachelor of Environmental Design - Emphasis in Urban Planning, University of Colorado, Boulder, 2017**

2022-PRESENT

Reese Shaw is an Urban Planner with over six years of experience in both the public and private sectors and a background in multimodal transportation planning, land use planning and community engagement. He has worked on projects for the City and County of Denver, Boulder and the City of Englewood. Reese believes cities and towns of all sizes should be designed safely and equitably so everyone has the opportunity for a high quality of life.

RECENT RELEVANT PROJECTS

CDOT Urban Arterials Study Colorado Boulevard within The City & County of Denver 2022-present
Reese is currently working on analyzing multimodal infrastructure needs along Denver's Colorado Boulevard. His contributions include an inventory of existing conditions, a bike and pedestrian network gap analysis and a set of prioritized recommendations to make multimodal infrastructure and safety improvements.

The Healthy River Corridor Study, City and County of Denver 2022-2023
Reese was an urban planner for this study that evaluated using waterway buffers as a tool to further citywide goals along the South Platte River Corridor and its 14 tributaries. The study evaluated waterway buffers of various widths to determine how water quality, riparian habitat, recreation & mobility, and land uses could be positively influenced along the South Platte River Corridor.

The Gateway Area Travel Study, City of Denver / Denver International Airport 2022-2024
Reese was an urban planner for this study that evaluated multimodal and innovative mobility solutions along the Pena Boulevard Corridor and within Denver's Gateway/Green Valley Ranch Neighborhoods. He evaluated multimodal transportation alternatives for arterial corridors to better serve the local neighborhoods as well as regional airport users. He also analyzed a range of existing conditions throughout the area including land-use, socio-economics, employment, future street networks, transit, and bicycle and pedestrian infrastructure.

The Englewood Transit Station Area Multimodal Corridor Plan, City of Englewood 2022-2023
Reese was an urban planner for this study that engaged a diverse range of stakeholders, residents, and City staff to identify short-term improvements and a long-term vision for Englewood Parkway. The collaborative approach resulted in a vibrant multimodal vision for Englewood Parkway that reflected the community's needs, desires, and values.

Transportation Planning Specialist, City of Boulder Transportation, + Mobility Department 2017-2022
Reese focused on designing and implementing multimodal transportation projects, plans, and programs such as the Neighborhood GreenStreet Program which aimed to provide safe and comfortable cycling options along neighborhood streets. He also assisted in drafting policies for Boulder's Micromobility and E-Scooter Pilot Programs. Additionally, Reese assisted with the development and production of city plans including the 2019 Low-Stress Walk & Bike Network Plan, the 2019 Transportation Master Plan, the 2019 & 2022 Vision Zero Boulder Safe Streets Reports, the and the 2020 Transportation Report on Progress.

The Low Stress Walk and Bike Network Plan, City of Boulder 2019
While working at The City of Boulder, Reese assisted with the development and production of multiple transportation plans including the 2019 Low-Stress Walk & Bike Network Plan. He focused on identifying the Bike Vision Network, facility type selection, and the implementation of programs such as the Neighborhood GreenStreet Program. His contributions resulted in Boulder's first Neighborhood Greenstreet on 13th Street.

Schedule 5

Special Funding Requirements

Excerpt from Request for Proposal dated July 9, 2024, Attachments C and D

SPECIAL FUNDING CONTRACT REQUIREMENTS FOR CITY OF PUEBLO
BID 24-012
For use with FEMA, ARPA, SLFRF, and/or other state and federal grant funds and cooperative agreements

This section shall be added to all City bid projects with the potential utilization of federal or state fund projects (including projects utilizing FEMA, ARPA, SLFRF, or grant funds). The following clauses mirror the Federal Required Contract Provisions available at www.fema.gov/procurement-disaster-assistance-team. Questions about the City's Purchasing Policy and the federal project requirements may be directed to bidinfo@pueblo.us.

Definitions:

Agreement: For the purposes of this bid and/or project, *agreement* shall indicate a contract between City and Contractor.

Contractor: Awarded bidder, consultant, and/or engineer contracted or under agreement with the City for a specified duration or for specific project work.

Contract: Any form of agreement, award, written contract, issued purchase order, purchase agreement, etc. as issued by the City as a result of a formal or informal bid, cooperative agreement, or other award as determined appropriate by the Purchasing Director and/or City Mayor and/or City Council.

Notice:

The project(s) and contracts utilizing funds from a federally established fund, disaster relief program, state program, or other grant fund are subject to the sections contained herein and signature of the bid by the Contractor shall constitute Contractor's agreement to all terms within this bid, agreement, and/or contract.

Failure to adhere to all federal, FEMA, state, grant, and City project requirements may mean suspension or department by the City of Pueblo, the federal government, and other FEMA awarded projects (as per 2 CFR, Part 180, Implementing Executive Orders 12549 and 12689).

It is the Contractor's responsibility to adhere to any federal fund project requirements that may be revised, added, stipulated by the situation or federal fund advisor, etc. Additionally, Contractor must adhere to the terms of the grant award as applicable for each project, including all federal laws, executive orders, federal regulations, state oversight regulations, etc. Failure to adhere to these and all other project requirements may mean suspension or department (see Section 9 below).

As indicated below each Section, some clauses determined nonapplicable for this project may be removed.

1. REMEDIES

Applicable to all contracts/agreements in excess of $250,000; 2 CFR, Part 200, Appendix II(A)

1.1 All remedies provided for in this Agreement may be exercised individually or in combination with any other remedy available hereunder or under applicable laws, rules and regulations. The exercise of any remedy shall not preclude or in any way be deemed to waive any other remedy.

1.2 The City may withhold any amount that may be due Contractor as the City deems necessary to protect the City against loss including, without limitation, loss as a result of outstanding liens and excess costs incurred by the City in procuring from third parties replacement products and services necessary to complete the project.

1.3 City may deny payment for products not received and services not performed, or that due to Contractor's actions/inactions cannot be delivered/performed, or if they were delivered/performed and are reasonably of no value to the City, provided that any denial of payment shall be equal to the value of the City's obligations for products/services not delivered/performed.

2. TERMINATION FOR CAUSE AND CONVENIENCE

Applicable to all contracts/agreements in excess of $10,000; 2 CFR, Part 200, Appendix II(B)

2.1 Termination for Cause. Contractor's failure to perform or observe any covenant, condition, provision, or term of the contract shall constitute Contractor's default. In the event of Contractor's default, the City shall have the right to exercise its legal and equitable remedies as listed in Section 1 above and may immediately terminate the agreement upon written notice to Contractor.

2.2 Termination for Convenience. City shall have the option, in its sole discretion, to terminate the contract at any time during the term for convenience and without cause. City shall exercise this option by giving Contractor written notice of termination including date on which termination shall become effective.

2.3 Within 30 days after specified termination, Contractor shall submit to City a final invoice for actual property shipped, received, and accepted and/or services (partial or in full) accepted as complete by the City's authorized representative. All invoices shall be pro-rated for exact amount of product received or work submitted. City shall not pay any additional costs for loss of work or contract, administrative or work costs after termination date, costs to subcontractors or subconsultants for loss of work, or any other conditions. The City's payment obligation under this Section shall survive termination of the contract.

3. EQUAL EMPLOYMENT OPPORTUNITY

This section is required for all federal grant and cooperative agreement programs; 2 CFR, Part 200, Appendix II(C)

During the performance of this contract, the Contractor agrees as follows:

3.1 The Contractor will not discriminate against any employee or applicant for employment because of race, color, religion, sex, sexual orientation, gender identity, or national origin. The Contractor will take affirmative action to ensure that applicants are employed, and that employees are treated during employment without regard to their race, color, religion, sex, sexual orientation, gender identity, or national origin. Such action shall include, but not be limited to the following:

Employment, upgrading, demotion, or transfer; recruitment or recruitment advertising; layoff or termination; rates of pay or other forms of compensation; and selection for training, including apprenticeship. The Contractor agrees to post in conspicuous places, available to employees and applicants for employment, notices to be provided setting forth the provisions of this nondiscrimination clause.

3.2 The Contractor will, in all solicitations or advertisements for employees placed by or on behalf of the Contractor, state that all qualified applicants will receive consideration for employment without regard to race, color, religion, sex, sexual orientation, gender identity, or national origin.

3.3 The Contractor will not discharge or in any other manner discriminate against any employee or applicant for employment because such employee or applicant has inquired about, discussed, or disclosed the compensation of the employee or applicant or another employee or applicant. This provision shall not apply to instances in which an employee who has access to the compensation information of other employees or applicants as a part of such employee's essential job functions discloses the compensation of such other employees or applicants to individuals who do not otherwise have access to such information, unless such disclosure is in response to a formal complaint or charge, in furtherance of an investigation, proceeding, hearing, or action, including an investigation conducted by the employer, or is consistent with the Contractor's legal duty to furnish information.

3.4 The Contractor will send to each labor union or representative of workers with which he has a collective bargaining agreement or other contract or understanding, a notice to be provided advising the said labor union or workers' representatives of the Contractor's commitments under this section and shall post copies of the notice in conspicuous places available to employees and applicants for employment.

3.5 The Contractor will comply with all provisions of Executive Order 11246 of September 24, 1965, and of the rules, regulations, and relevant orders of the Secretary of Labor.

3.6 The Contractor will furnish all information and reports required by Executive Order 11246 of September 24, 1965, and by rules, regulations, and orders of the Secretary of Labor, or pursuant thereto, and will permit access to his books, records, and accounts by the administering agency and the Secretary of Labor for purposes of investigation to ascertain compliance with such rules, regulations, and orders.

3.7 In the event of the Contractor's noncompliance with the nondiscrimination clauses of this contract or with any of the said rules, regulations, or orders, this contract may be canceled, terminated, or suspended in whole or in part and the Contractor may be declared ineligible for further Government contracts or federally assisted construction contracts in accordance with procedures authorized in Executive Order 11246 of September 24, 1965, and such other sanctions may be imposed and remedies invoked as provided in Executive Order 11246 of September 24, 1965, or by rule, regulation, or order of the Secretary of Labor, or as otherwise provided by law.

3.8 The Contractor will include the portion of the sentence immediately preceding paragraph (3.1) and the provisions of paragraphs (3.1) through (3.8) in every subcontract or purchase order unless exempted by rules, regulations, or orders of the Secretary of Labor issued pursuant to section 204 of Executive Order 11246 of September 24, 1965, so that such provisions will be binding upon each subcontractor or vendor. The Contractor will take such action with respect to any subcontract or purchase order as the administering agency may direct as a means of enforcing such provisions, including sanctions for noncompliance:

Provided, however, that in the event a Contractor becomes involved in, or is threatened with, litigation with a subcontractor or vendor as a result of such direction by the administering agency, the Contractor may request the United States to enter into such litigation to protect the interests of the United States.

4. DAVIS BACON ACT

Only applicable for construction contracts in excess of $2,000; include most current Davis Bacon Wages supplement; 2 CFR, Part 200, Appendix II(D)

This section only applicable for construction.

4.1 A copy of the current prevailing wage determination issued by the Department of Labor has been attached as Appendix ____.

4.2 All transactions regarding this contract shall be done in compliance with the Davis-Bacon Act (40 U.S.C. 3141- 3144, and 3146-3148) and the requirements of 29 C.F.R. pt. 5 as may be applicable. The Contractor shall comply with 40 U.S.C. 3141-3144, and 3146-3148 and the requirements of 29 C.F.R. pt. 5 as applicable.

4.3 Contractors are required to pay wages to laborers and mechanics at a rate not less than the prevailing wages specified in a wage determination made by the Secretary of Labor.

4.4 Additionally, Contractors shall pay wages not less than once a week.

5. COPELAND ANTI-KICKBACK ACT

Only applicable for construction contracts in excess of $2,000; 29 CFR, Part 3

This section only for construction.

5.1 Contractor. The Contractor shall comply with 18 U.S.C. §874, 40 U.S.C. § 3145, and the requirements of 29 C.F.R. pt. 3 as may be applicable, which are incorporated by reference into this contract.

5.2 Subcontracts. The Contractor or subcontractor shall insert in any subcontracts the clause above and such other clauses as FEMA may by appropriate instructions require, and also a clause requiring the subcontractors to include these clauses in any lower tier subcontracts. The Contractor shall be responsible for the compliance by any subcontractor or lower tier subcontractor with all of these contract clauses.

5.3 Breach. A breach of the contract clauses above may be grounds for termination of the contract, and for debarment as a Contractor and subcontractor as provided in 29 C.F.R. § 5.12.

6. COMPLIANCE WITH CONTRACT WORK HOURS AND SAFETY STANDARDS ACT

Applicable for projects in excess of $100,000 that involve employment of mechanics or laborers; 2 CFR, Part 200, Appendix II(E)

This section only for contracts with being performed by mechanics or laborers this section has been removed.

6.1 Overtime requirements. Contractor will comply with 40 U.S.C. 3702 and 3704, as supplemented by Department of Labor regulations (29 C.F.R. Part 5). No Contractor or subcontractor contracting for any part of the contract work which may require or involve the employment of laborers or mechanics shall require or permit any such laborer or mechanic in any work week in which he or she is employed on such work to work in excess of forty hours in such work week unless such laborer or mechanic receives compensation at a rate not less than one and one-half times the basic rate of pay for all hours worked in excess of forty hours in such work week.

6.2 Violation; liability for unpaid wages; liquidated damages. In the event of any violation of the clause set forth in paragraph 6.1 of this section the Contractor and any subcontractor responsible therefor shall be liable for the unpaid wages. In addition, such Contractor and subcontractor shall be liable to the City for liquidated damages. Such liquidated damages shall be computed with respect to each individual laborer or mechanic, including watchmen and guards, employed in violation of the clause set forth in paragraph 6.1 of this section, in the sum of $27 for each calendar day on which such individual was required or permitted to work in excess of the standard workweek of forty hours without payment of the overtime wages required by the clause set forth in paragraph 6.1.

6.3 Withholding for unpaid wages and liquidated damages. The City shall upon its own action or upon written request of an authorized representative of the Department of Labor withhold or cause to be withheld, from any moneys payable on account of work performed by the Contractor or subcontractor under any such contract or any other Federal contract with the same Contractor, or any other federally-assisted contract subject to the Contract Work Hours and Safety Standards Act, which is held by the same Contractor, such sums as may be determined to be necessary to satisfy any liabilities of such Contractor or subcontractor for unpaid wages and liquidated damages as provided in the clause set forth in paragraph (6.2) of this section.

6.4 Subcontracts. The Contractor or subcontractor shall insert in any subcontracts the clauses set forth in paragraphs 6.1 through 6.4 of this section and also a clause requiring the subcontractors to include these clauses in any lower tier subcontracts. The Contractor shall be responsible for compliance by any subcontractor or lower tier subcontractor with the clauses set forth in paragraphs 6.1 through 6.4 of this section.

7. RIGHTS TO INVENTIONS MADE UNDER A CONTRACT/AGREEMENT

Applicable to contracts for performance of experimental, developmental, or research work; 2 CFR, Part 220, Appendix II(F)

If the Contractor qualifies as a small business firm or nonprofit organization regarding the substitution of parties, assignment or performance of experimental, developmental, or research work under the federal funding contract, the Contractor must comply with the requirements of 37 CFR Part 401, "Rights to Inventions Made by Nonprofit Organizations and Small Business Firms Under Government Grants, Contracts and Cooperative Agreements."

8. CLEAN AIR ACT AND THE FEDERAL WATER POLLUTION CONTROL ACT

Contracts in excess of $150,000; 2 CFR, Part 200, Appendix II(G)

8.1 Clean Air Act:

8.1.1 The Contractor agrees to comply with all applicable standards, orders or regulations issued pursuant to the Clean Air Act, as amended, 42 U.S.C. § 7401 et seq.

8.1.2 The Contractor agrees to report each violation to the City and understands and agrees that the City will, in turn, report each violation as required to assure notification to the federal, state, or other grant funding agency and the appropriate Environmental Protection Agency Regional Office.

8.1.3 The Contractor agrees to include these requirements in each subcontract meeting or exceeding $150,000.

8.2 Federal Water Pollution Control Act:

8.2.1 The Contractor agrees to comply with all applicable standards, orders or regulations issued pursuant to the Federal Water Pollution Control Act, as amended, 33 U.S.C. § 1251 et seq.

8.2.2 The Contractor agrees to report each violation to the City and understands and agrees that the City will, in turn, report each violation as required to assure notification to the federal, state, or other grant funding agency and the appropriate Environmental Protection Agency Regional Office.

8.2.3 The Contractor agrees to include these requirements in each subcontract meeting or exceeding $150,000.

9. DEBARMENT AND SUSPENSION

Required for all federal, state, grant, and cooperative agreement programs; 2 CFR, Part 200, Appendix II(H)

9.1 This contract is a covered transaction for purposes of 2 CFR, Part 180 and 2 CFR, Part 3000. As such the Contractor is required to verify that none of the Contractor, its principals (defined at 2 CFR Section 180.995) or its affiliates (defined at 2 CFR Section 180.905) are excluded (defined at 2 CFR Section 180.940) or disqualified (defined at 2 CFR Section 180.935).

9.2 The Contractor must comply with 2 CFR Part 180, subpart C and 2 CFR Part 3000, subpart C and must include a requirement to comply with these regulations in any lower tier covered transaction it enters into.

9.3 This certification is a material representation of fact relied upon by City. If it is later determined that the Contractor did not comply with 2 CFR Part 180, subpart C and 2 CFR Part 3000, subpart C, in addition to remedies available to City, the federal government may pursue available remedies, including but not limited to suspension and/or debarment.

9.4 The bidder agrees to comply with the requirements of 2 CFR Part 180, subpart C and 2 CFR Part 3000, subpart C while this offer is valid and throughout the period of any contract that may arise from this offer. The Proposer further agrees to include a provision requiring such compliance in its lower tier covered transactions.

10. BYRD ANTI-LOBBYING AMENDMENT

Award of $100,00 or more; 2 CFR, Part 200, Appendix II(I)

Contractors must sign and submit to the City the Byrd Anti-Lobbying Amendment Certification included with this bid. Contractors who apply or bid for an award of $100,000 or more shall file the required certification. Each tier certifies to the tier above that it will not and has not used federal appropriated funds to pay any person or organization for influencing or attempting to influence an officer or employee of any agency, a member of Congress, officer or employee of Congress, or an employee of a member of Congress in connection with obtaining any Federal contract, grant, or any other award covered by 31 U.S.C. § 1352. Each tier shall also disclose any lobbying with non-federal funds that takes place in connection with obtaining any federal award. Such disclosures are forwarded from tier to tier up to the recipient.

11. PROCUREMENT OF RECOVERED MATERIALS

Required for all federal grant and cooperative agreement programs; 2 CFR, Part 200, Appendix II(J)

11.1 In the performance of this contract/agreement, the Contractor shall make maximum use of products containing recovered materials that are EPA-designated items in accordance with 40 C.F.R. Part 247, unless the product cannot be acquired:

- Competitively within a timeframe providing for compliance with the contract performance schedule.
- Meeting contract performance requirements.
- At a reasonable price.

11.2 Information about this requirement, along with the list of EPA-designate items, is available at EPA's Comprehensive Procurement Guidelines web site, https://www.epa.gov/smm/comprehensive-procurement-guideline-cpg-program.

11.3 The Contractor also agrees to comply with all other applicable requirements of Section 6002 of the Solid Waste Disposal Act, as amended by the Resource Conservation and Recovery Act.

12. PROHIBITION ON CERTAIN TELECOMMUNICATIONS AND VIDEO SURVEILLANCE SERVICES OR EQUIPMENT

Required for all federal grant and cooperative agreement programs used to purchase telecommunications and video surveillance services or equipment; 2 CFR, Part 200, Appendix II(K)

The Contractor and all of its subcontractors acknowledge and will comply with the requirements of 2 C.F.R. § 200.216, including the prohibition on spending federal loan or grant funds to procure or obtain the prohibited equipment, services, or systems covered by the provision.

13. DOMESTIC PREFERENCES FOR PROCUREMENT

Required for all federal grant and cooperative agreement programs; 2 CFR, Part 200, Appendix II(L)

To the extent consistent with law and in accordance with 2 C.F.R. § 200.322, Contractor and all of its subcontractors will to the greatest extent practicable under the Contract, provide a preference for the purchase, acquisition, or use of goods, products, or materials produced in the United States (including but not limited to iron, aluminum, steel, cement, and other manufactured products). This requirement must be included in all contracts and purchase orders that Contractor may enter into.

14. ACCESS TO RECORDS

This section from Recommended Contract Provision No. 1; Required for all City federally funded projects

14.1 The Contractor agrees to provide the federal fund and/or grant provider, the City, the Comptroller General of the United States, and/or any of their authorized representatives access to any books, documents, papers, and records of the Contractor which are directly pertinent to this contract for the purposes of making audits, examinations, excerpts and transcriptions.

14.2 The Contractor agrees to permit any of the foregoing parties to reproduce by any means whatsoever or to copy excerpts and transcriptions as reasonably needed.

14.3 Only applicable to construction: The Contractor agrees to provide the federal fund and/or grant provider or authorized representatives access to construction or other work sites pertaining to the work being completed under the Project.

14.4 In compliance with the Disaster Recovery Act of 2018, the City and the Contractor acknowledge and agree that no language in this contract is intended to prohibit audits or internal reviews by the federal fund and/or grant provider or the Comptroller General of the United States.

15. CHANGES

This section from Recommended Contract Provision No. 2; Required for all City federally funded projects

The cost of changes, modifications, change orders, or constructive changes must be allowable, allocable, within the scope of its grant or cooperative agreement, and reasonable for the completion of the project scope.

Changes can be made by either party to alter the method, price, or schedule of the work without breaching the contract as long as the City and Contractor agree to change in writing and change still meets any funding submittal and expiration dates.

16. DEPARTMENT OF HOMELAND SECURITY SEAL, LOGO, AND FLAGS

This section from Recommended Contract Provision No. 3; Required for all City federally funded projects

The Contractor shall not use the Department of Homeland Security (DHS) seal(s), logos, crests, or reproductions of flags or likenesses of DHS agency officials without specific federal fund and or grant administrator approval.

17. COMPLIANCE WITH FEDERAL LAW, REGULATIONS, AND EXECUTIVE ORDERS

This section from Recommended Contract Provision No. 4; Required for all City federally funded projects

This is an acknowledgement that federal financial assistance will be used to fund all or a portion of the contract. The Contractor will comply with all applicable federal law, regulations, executive orders, federal policies, procedures, and directives.

18. NO OBLIGATION BY FEDERAL GOVERNMENT

This section from Recommended Contract Provision No. 5; Required for all City federally funded projects

The Federal Government is not a party to this contract and is not subject to any obligations or liabilities to the non-federal entity, Contractor, or any other party pertaining to any matter resulting from the contract.

19. FRAUD AND FALSE OR FRAUDULENT OR RELATED ACTS

This section from Recommended Contract Provision No. 6; Required for all City federally funded projects

The Contractor acknowledges that 31 U.S.C. Chapter 38 (Administrative Remedies for False Claims or Statements) applies to the Contractor's actions pertaining to this contact.

Supplement to SPECIAL FUNDING CONTRACT REQUIREMENTS FOR CITY OF PUEBLO
For use with Safe Streets For All Federal Highway Administration (SS4A/FHWA)

Relevant Definitions

Contractor/Consultant shall refer to 2 CFR 200.331 for definition of subrecipient and contractor. For the purposes of this bid, the Consultant/Contractor may be referred to as subrecipient and/or contractor. For information refer to: https://www.ecfr.gov/current/title-2/subtitle-A/chapter-II/part-200/subpart-D/subject-group-ECFR031321e29ac5bbd/section-200.331

Contractor/Consultant shall be responsible to follow all terms and conditions of the grant sections listed for Recipient in flow-down (pass-through) for the agreement awarded in this bid and any subcontractor/subconsultant agreements/contracts. 2 C.F.R. parts 200 and 1201, including 2 C.F.R. 200.331-200.333

Build America, Buy America

Contractor/Consultant may not propose inclusion of any products, materials, etc. that are not in compliance with the section shown on page 17 of 29 of the attached grant agreement for City of Pueblo (Section 18.1 Build America, Buy America). For additional information, refer to https://www.energy.gov/management/build-america-buy-america#:~:text=Per%20Section%2070914%20of%20the,domestic%20content%20procurement%20preference%20requirement.

Small and Disadvantaged Business Requirements

The Contractor/Consultant shall expend all funds under this award in compliance with the requirements of 2 CRF 200.321. For additional information refer to: https://www.ecfr.gov/current/title-2/subtitle-A/chapter-II/part-200/subpart-D/subject-group-ECFR45ddd4419ad436d/section-200.321

Foreign Market Restrictions

Contractor/Consultant shall not allow funds provided under this award to be used to fund the use of any product or service of a foreign country during the period for which such foreign country is listed by the United States Trade Representative as denying fair and equitable market opportunities for products and suppliers of the United States in procurement and construction.

Prohibition on Certain Telecommunications and Video Surveillance Services or Equipment

Contractor/Consultant acknowledges that Section 889 of Pub. L. No. 115-232, 2 C.F.R. 200.216 and 2 C.F.R. 200.471 prohibit the Contractor/Consultant and all subcontractors/subconsultants from procuring or obtaining certain telecommunications and video surveillance services or equipment under this award.

Climate Change and Environmental Justice

Contractor/Consultant shall perform work consistent with Executive Order 14008, '·Tackling the Climate Crisis at Home and Abroad" (Jan. 27, 2021), Attachment C documents the consideration of climate change and environmental justice impacts of the Project.

Racial Equity and Barriers to Opportunity

Contractor/Consultant shall perform work consistent with Executive Order 13985, "Advancing Racial Equity and Support for Underserved Communities Through the Federal Government" (Jan.20.2021), Attachment D documents activities related to the Project to improve racial equity and reduce barriers to opportunity.

Trafficking in Persons

Contractor/Consultant shall be required to comply with the requirement in paragraph (g) of section 106 of the Trafficking Victims Protection Act of 2000 (TVPA), as amended (22 U.S.C. 7104(g)). *Refer to:* ***https://www.ecfr.gov/current/title-2/subtitle-A/chapter-I/part-175***

External Award and Obligations

The Contractor/Consultant shall comply with (1) 49 C.F.R. part 20: New Restrictions on Lobbying; (2) 49 C.F.R. part 21: Nondiscrimination in Federally-Assisted Programs of the Department of Transportation-Effectuation of Title V1 of the Civil Rights Act of 1964; (3) 49 C .F .R. part 2 7: Nondiscrimination on the Basis of Disability in Programs or Activities Receiving Federal Financial Assistance; and (4) Subpart B of 49 C.F.R. pa1t 32: Government-wide Requirements for Drug-free workplace (Financial Assistance). Refer to page 24 of 29 of the attached Grant Award and/or refer to https://www.ecfr.gov/current/title-49/subtitle-A/part-21, https://www.ecfr.gov/current/title-49/subtitle-A/part-27, https://www.ecfr.gov/current/title-49/subtitle-A/part-32.

U.S. DEPARTMENT OF TRANSPORTATION, EXHIBITS TO FHWA GRANT AGREEMENTS UNDER THE FISCAL YEAR 2022 SAFE STREETS AND ROADS FOR ALL GRANT PROGRAM, DATED FEBRUARY 8, 2023

The Contractor/Consultant shall comply with all requirements, terms, and conditions of the attached document Exhibits A and B (pages A-1 to B-21). If any of these requirements, terms, and conditions are not in agreement with the City of Pueblo SPECIAL FUNDING CONTRACT REQUIREMENTS FOR CITY OF PUEBLO or this Supplement for SS4AFHWA, the U.S. Department of Transportation, Exhibits to FHWA Grant Agreements dated 8, 2023 shall take precedence.

GRANT CERTIFICATION

To: Heather Graham, President of the City Council
Nicholas Gradisar, Mayor

Re: Safe Streets 4 All – SS4A Planning Grant

I hereby certify that I have reviewed and am familiar with the attached documents, and to the best of my knowledge and belief, the City has the present ability to comply with all special conditions, certifications and assurances therein contained.

Name (print) Kelly Grisham

06/13/2023
Date

Title: PW Project Coordinator

1. Award No.

693JJ32340380

2. Effective Date
See No. 17 Below

3. Assistance Listings No.
20.939

4. Award To
City of Pueblo
1 City Hall Place
Pueblo, CO 81003

Unique Entity Id.: NJK3BNUDRHJ7
EIN No.: 84-6000615

5. Sponsoring Office
U.S. Department of Transportation
Federal Highway Administration
Office of Safety
1200 New Jersey Avenue, SE
HSSA-1, Mail Drop E71-117
Washington, DC 20590

6. Period of Performance
Effective Date of Award –
25 months

7. Total Amount

Federal Share:	$681,600.00
Recipient Share:	$170,400.00
Other Federal Funds:	$0
Other Funds:	$0
Total:	$852,000.00

8. Type of Agreement
Action Plan Grant

9. Authority
Section 24112 of the Infrastructure Investment and Jobs Act (Pub. L. 117–58, November 15, 2021; also referred to as the "Bipartisan Infrastructure Law" or "BIL")

10. Procurement Request No.
HSSP230479PR

11. Federal Funds Obligated
$681,600.00

12. Submit Payment Requests To
See article 20.

13. Payment Office
See article 20.

14. Accounting and Appropriations Data
15X0173E50.0000.055SR10500.5592000000.41010.610066

15. Description of Project
The City will hire a consultant or consultants to create an evidence-based Action Plan that will facilitate life-saving redesigns that significantly reduce or eliminate roadway fatalities and serious injuries. The Comprehensive safety plan will be developed through interaction between multiple community stakeholder groups to identify projects and programs that will help contribute to improving the safety of pedestrians, bicyclists and vehicles.

RECIPIENT

16. Signature of Person Authorized to Sign

Nicholas Gradisar 7-12-23

Signature Date
Name: Nicholas A. Gradisar
Title: Mayor

FEDERAL HIGHWAY ADMINISTRATION

17. Signature of Agreement Officer

Signature Date
Name: Carolyn Lethert
Title: Agreement Officer

U.S. DEPARTMENT OF TRANSPORTATION

GRANT AGREEMENT UNDER THE FISCAL YEAR 2022 SAFE STREETS AND ROADS FOR ALL GRANT PROGRAM

This agreement is between the Federal Highway Administration (the "FHWA") and the City of Pueblo (the "**Recipient**").

This agreement reflects the selection of the Recipient to receive a Safe Streets and Roads for All ("SS4A") Grant for the SS4A Planning Grant.

The parties therefore agree to the following:

ARTICLE 1
GENERAL TERMS AND CONDITIONS

1.1 General Terms and Conditions.

(a) In this agreement, "**General Terms and Conditions**" means the content of the document titled "General Terms and Conditions Under the Fiscal Year 2022 Safe Streets and Roads for All Grant Program," dated February 8, 2023, which is available at https://www.transportation.gov/grants/ss4a/grant-agreements. Articles 7–30 are in the General Terms and Conditions. The General Terms and Conditions are part of this agreement.

(b) The Recipient states that it has knowledge of the General Terms and Conditions. Recipient also states that it is required to comply with all applicable Federal laws and regulations including, but not limited to, the Uniform Administrative Requirements, Cost Principles, and Audit Requirements for Federal Awards (2 CFR part 200); National Environmental Policy Act (NEPA) (42 U.S.C. § 4321 et seq.); and Build America, Buy America Act (BIL, div. G §§ 70901-27).

(c) The Recipient acknowledges that the General Terms and Conditions impose obligations on the Recipient and that the Recipient's non-compliance with the General Terms and Conditions may result in remedial action, termination of the SS4A Grant, disallowing costs incurred for the Project, requiring the Recipient to refund to the FHWA the SS4A Grant, and reporting the non-compliance in the Federal-government-wide integrity and performance system.

ARTICLE 2
APPLICATION, PROJECT, AND AWARD

2.1 Application.

Application Title: SS4A Planning Grant

Application Date: August 26, 2022

2.2 Award Amount.

SS4A Grant Amount: $681,600

2.3 Award Dates.

Period of Performance End Date: See Section 6 on Page 1

2.4 Budget Period

Budget Period End Date: See Section 6 on Page 1

2.5 Action Plan Grant or Implementation Grant Designation.

Designation: Action Plan

2.6 Federal Award Identification Number. The Federal Award Identification Number is listed on page 1, line 1.

ARTICLE 3
SUMMARY PROJECT INFORMATION

3.1 Summary of Project's Statement of Work.

The goal of the Action Plan is to establish an evidence-based comprehensive plan that will identify roadway safety infrastructure projects and programs enabling the City to compete for surface road, bridge, and other infrastructure grants. The Action Plan will be used in concert with a study of local public transportation serving areas of persistent poverty, recently funded by FTA 20.505.

3.2 Project's Estimated Schedule.

ACTION PLAN SCHEDULE

Milestone	Schedule Date
Planned Draft Action Plan Completion Date:	December 31, 2024
Planned Action Plan Completion Date:	March 31, 2025
Planned Action Plan Adoption Date:	June 27, 2025
Planned SS4A Final Report Date:	June 30, 2025

3.3 Project's Estimated Costs.

(a) Eligible Project Costs

Eligible Project Costs	
SS4A Grant Amount:	$681,600
Other Federal Funds:	$0
State Funds:	$0
Local Funds:	$170,400
In-Kind Match:	$0
Other Funds:	$0
Total Eligible Project Cost:	$852,000

(b) Supplemental Estimated Budget

Cost Element	Federal Share	Non-Federal Share	Total Budget Amount
Direct Labor	$0.00	$0.00	$0.00
Fringe Benefits	$0.00	$0.00	$0.00
Travel	$0.00	$0.00	$0.00
Equipment	$0.00	$0.00	$0.00
Supplies	$0.00	$0.00	$0.00
Contractual/Consultant	$681,600	$170,400	$852,000
Other	$0.00	$0.00	$0.00
Indirect Costs	$0.00	$0.00	$0.00
Total Budget	**$0.00**	**$0.00**	**$852,000**

ARTICLE 4

RECIPIENT INFORMATION

4.1 Recipient's Unique Entity Identifier.

NJK3BNUDRHJ7

4.2 Recipient Contact(s).

Andrew Hayes
Public Works Department Director
City of Pueblo
211 East D Street Pueblo, CO 81003
719-553-2295
ahayes@pueblo.us

Kelly Grisham
Public Works Project Coordinator
City of Pueblo
211 East D Street Pueblo, CO 81003
719-553-2254
kgrisham@pueblo.us

4.3 Recipient Key Personnel.

Name	Title or Position
Andrew Hayes	**Public Works Department Director**
Charles Roy	**Public Works Department Deputy Director**
Kelly Grisham	**Public Works Department Project Coordinator**
Eva Cosyleon	**MPO Manager**

4.4 USDOT Project Contact(s).

Stephen Parker
Safe Streets and Roads for All Program Manager
Federal Highway Administration
Office of Safety
(202) 366-4668
stephen.parker@dot.gov

and

Ashley Cucchiarelli
Agreement Officer (AO)
Federal Highway Administration
Office of Acquisition and Grants Management
12300 West Dakota Avenue Suite 390
Lakewood, CO 80228
(720)963-3589
Ashley.cucchiarelli@dot.gov

and

TBD
Agreement Specialist (AS)

and

Division Administrator
Agreement Officer's Representative (AOR)
Colorado Division
12300 W. Dakota Avenue, Suite 180
Lakewood, CO 80228
Colorado.fhwa@dot.gov

and

Ajin Hu
Colorado Division Office Point of Contact
Grants Program Manager
12300 W. Dakota Avenue, Suite 180
Lakewood, CO 80228
720-963-3071
ajin.hu@dot.gov

William Haas
Program Development Team Leader
FHWA Colorado Division
12300 W. Dakota Avenue, Suite 180
Lakewood, CO 80228
720-963-3016
william.haas@dot.gov

ARTICLE 5
USDOT ADMINISTRATIVE INFORMATION

5.1 Office for Subaward and Contract Authorization.

USDOT Office for Subaward and Contract Authorization: FHWA Office of Acquisition and Grants Management

SUBAWARDS AND CONTRACTS APPROVAL

Note: See 2 CFR § 200.331, Subrecipient and contractor determinations, for definitions of subrecipient (who is awarded a subaward) versus contractor (who is awarded a contract).

Note: Recipients with a procurement system deemed approved and accepted by the Government or by the AO are exempt from the requirements of this clause. See 2 CFR 200.317 through 200.327.

Note: This clause is only applicable to Action Plan Grants.

Unless described in the application and funded in the approved award, the Recipient must obtain prior written approval from the AO for the subaward, transfer, or contracting out of any work under this award above the Simplified Acquisition Threshold. This provision does not apply to the acquisition of supplies, material, equipment, or general support services. Approval of each subaward or contract is contingent upon the Recipient's submittal of a written fair and reasonable price determination, and approval by the AO for each proposed contractor/sub-recipient. Consent to enter into subawards or contracts will be issued through written notification from the AO or a formal amendment to the Agreement.

The following subawards and contracts are currently approved under the Agreement by the AO. This list does not include supplies, material, equipment, or general support services which are exempt from the pre-approval requirements of this clause.

(Fill in at award or by amendment)

5.2 Reimbursement Requests

(a) The Recipient may request reimbursement of costs incurred in the performance of this agreement if those costs do not exceed the funds available under section 2.2 and are allowable under the applicable cost provisions of 2 C.F.R. Part 200, Subpart E. The Recipient shall not request reimbursement more frequently than monthly.

(b) The Recipient shall use the DELPHI eInvoicing System to submit requests for reimbursement to the payment office. When requesting reimbursement of costs incurred or credit for cost share incurred, the Recipient shall electronically submit supporting cost detail with the SF 271 (Outlay Report and Request for Reimbursement for Construction Programs) to clearly document all costs incurred.

(c) The Recipient's supporting cost detail shall include a detailed breakout of all costs incurred, including direct labor, indirect costs, other direct costs, travel, etc., and the Recipient shall identify the Federal share and the Recipient's share of costs. If the Recipient does not provide sufficient detail in a request for reimbursement, the AO may withhold processing that request until the Recipient provides sufficient detail.

(d) The USDOT shall not reimburse costs unless the Agreement Officer's Representative (the "**AOR**") reviews and approves the costs to ensure that progress on this agreement is sufficient to substantiate payment.

(e) The USDOT may waive the requirement that the Recipient use the DELPHI eInvoicing System. The Recipient may obtain waiver request forms on the DELPHI eInvoicing website (http://www.dot.gov/cfo/delphi-einvoicing-system.html) or by contacting the AO. A Recipient who seeks a waiver shall explain why they are unable to use or access the Internet to register and enter payment requests and send a waiver request to

Director of the Office of Financial Management
US Department of Transportation,
Office of Financial Management B-30, Room W93-431
1200 New Jersey Avenue SE
Washington DC 20590-0001

or

DOTElectronicInvoicing@dot.gov.

If the USDOT grants the Recipient a waiver, the Recipient shall submit SF 271s directly to:

DOT/FAA
P.O. Box 268865
Oklahoma City, OK 73125-8865
Attn: Agreement Specialist

(f) The requirements set forth in these terms and conditions supersede previous financial invoicing requirements for Recipients.

ARTICLE 6
SPECIAL GRANT TERMS

6.1 SS4A funds must be expended within five years after the grant agreement is executed and DOT obligates the funds, which is the budget period end date in section 10.3 of the Terms and Conditions and Section 2.4 in Article 2.

6.2 The Recipient acknowledges that the Action Plan will be made publicly available, and the Recipient agrees that it will publish the final Action Plan on a publicly available website.

6.3 The Recipient demonstrates compliance with civil rights obligations and nondiscrimination laws, including Titles VI of the Civil Rights Act of 1964, the Americans with Disabilities Act (ADA), and Section 504 of the Rehabilitation Act, and accompanying regulations. Recipients of Federal transportation funding will also be required to comply fully with regulations and guidance for the ADA, Title VI of the Civil Rights Act of 1964, Section 504 of the Rehabilitation Act of 1973, and all other civil rights requirements.

6.4 There are no other special grant requirements for this award.

ATTACHMENT A
PERFORMANCE MEASUREMENT INFORMATION

Study Area: Pueblo County

Baseline Measurement Date: April 30, 2025

Baseline Report Date: June 30, 2025

Table 1: Performance Measure Table

Measure	Category and Description	Measurement Frequency
Equity	Percent of Funds to Underserved Communities: Funding amount (of total project amount) benefitting underserved communities, as defined by USDOT	End of period of performance
Costs	Project Costs: Quantification of the cost of each eligible project carried out using the grant	End of period of performance
Lessons Learned and Recommendations	Lessons Learned and Recommendations: Description of lessons learned and any recommendations relating to future projects of strategies to prevent death and serious injury on roads and streets.	End of period of performance

ATTACHMENT B
CHANGES FROM APPLICATION

INSTRUCTIONS FOR COMPLETING ATTACHMENT B: Describe all material differences between the scope, schedule, and budget described in the application and the scope, schedule, and budget described in Article 3. The purpose of this attachment B is to document the differences clearly and accurately in scope, schedule, and budget to establish the parties' knowledge and acceptance of those differences. See section 10.1.

Scope: Not Applicable

Schedule: Not Applicable

Budget: Not Applicable

The table below provides a summary comparison of the project budget.

	Application		Section 3.3	
Fund Source	$	%	$	%
Previously Incurred Costs (Non-Eligible Project Costs)				
Federal Funds				
Non-Federal Funds				
Total Previously Incurred Costs				
Future Eligible Project Costs				
SS4AFunds				
Other Federal Funds				
Non-Federal Funds				
Total Future Eligible Project Costs				
Total Project Costs				

ATTACHMENT C
RACIAL EQUITY AND BARRIERS TO OPPORTUNITY

1. Efforts to Improve Racial Equity and Reduce Barriers to Opportunity.

The Recipient states that rows marked with "X" in the following table are accurate:

	A racial equity impact analysis has been completed for the Project. *(Identify a report on that analysis or, if no report was produced, describe the analysis and its results in the supporting narrative below.)*
	The Recipient or a project partner has adopted an equity and inclusion program/plan or has otherwise instituted equity-focused policies related to project procurement, material sourcing, construction, inspection, hiring, or other activities designed to ensure racial equity in the overall delivery and implementation of the Project. *(Identify the relevant programs, plans, or policies in the supporting narrative below.)*
	The Project includes physical-barrier-mitigating land bridges, caps, lids, linear parks, and multimodal mobility investments that either redress past barriers to opportunity or that proactively create new connections and opportunities for underserved communities that are underserved by transportation. *(Identify the relevant investments in the supporting narrative below.)*
	The Project includes new or improved walking, biking, and rolling access for individuals with disabilities, especially access that reverses the disproportional impacts of crashes on people of color and mitigates neighborhood bifurcation. *(Identify the new or improved access in the supporting narrative below.)*
	The Project includes new or improved freight access to underserved communities to increase access to goods and job opportunities for those underserved communities. *(Identify the new or improved access in the supporting narrative below.)*
X	The Recipient has taken other actions related to the Project to improve racial equity and reduce barriers to opportunity, as described in the supporting narrative below.
	The Recipient has not yet taken actions related to the Project to improve racial equity and reduce barriers to opportunity but, before beginning construction of the project, will take relevant actions described in the supporting narrative below
	The Recipient has not taken actions related to the Project to improve racial equity and reduce barriers to opportunity and will not take those actions under this award.

2. Supporting Narrative.

The City of Pueblo Public Works Department has adopted a Title VI compliance plan, which assures equal public access to public works services and the benefits of capital improvement projects across the City. The Title VI plan is available online: City of Pueblo Public Works Department Title VI Compliance Plan

ATTACHMENT D
CLIMATE CHANGE AND ENVIRONMENTAL JUSTICE IMPACTS

1. Consideration of Climate Change and Environmental Justice Impacts.

The Recipient states that rows marked with "X" in the following table are accurate:

	The Project directly supports a Local/Regional/State Climate Action Plan that results in lower greenhouse gas emissions. *(Identify the plan in the supporting narrative below.)*
	The Project directly supports a Local/Regional/State Equitable Development Plan that results in lower greenhouse gas emissions. *(Identify the plan in the supporting narrative below.)*
	The Project directly supports a Local/Regional/State Energy Baseline Study that results in lower greenhouse gas emissions. *(Identify the plan in the supporting narrative below.)*
	The Recipient or a project partner used environmental justice tools, such as the EJSCREEN, to minimize adverse impacts of the Project on environmental justice communities. *(Identify the tool(s) in the supporting narrative below.)*
	The Project supports a modal shift in freight or passenger movement to reduce emissions or reduce induced travel demand. *(Describe that shift in the supporting narrative below.)*
	The Project utilizes demand management strategies to reduce congestion, induced travel demand, and greenhouse gas emissions. *(Describe those strategies in the supporting narrative below.)*
	The Project incorporates electrification infrastructure, zero-emission vehicle infrastructure, or both. *(Describe the incorporated infrastructure in the supporting narrative below.)*
	The Project supports the installation of electric vehicle charging stations. *(Describe that support in the supporting narrative below.)*
	The Project promotes energy efficiency. *(Describe how in the supporting narrative below.)*
	The Project serves the renewable energy supply chain. *(Describe how in the supporting narrative below.)*
	The Project improves disaster preparedness and resiliency *(Describe how in the supporting narrative below.)*
	The Project avoids adverse environmental impacts to air or water quality, wetlands, and endangered species, such as through reduction in Clean Air Act criteria pollutants and greenhouse gases, improved stormwater management, or improved habitat connectivity. *(Describe how in the supporting narrative below.)*
	The Project repairs existing dilapidated or idle infrastructure that is currently causing environmental harm. *(Describe that infrastructure in the supporting narrative below.)*
	The Project supports or incorporates the construction of energy- and location-efficient buildings. *(Describe how in the supporting narrative below.)*

	The Project includes recycling of materials, use of materials known to reduce or reverse carbon emissions, or both. *(Describe the materials in the supporting narrative below.)*
	The Recipient has taken other actions to consider climate change and environmental justice impacts of the Project, as described in the supporting narrative below.
X	The Recipient has not yet taken actions to consider climate change and environmental justice impacts of the Project but, before beginning construction of the Project, will take relevant actions described in the supporting narrative below.
	The Recipient has not taken actions to consider climate change and environmental justice impacts of the Project and will not take those actions under this award.

2. Supporting Narrative.

This project includes development of a comprehensive safety plan which will identify a slate of projects and programs to improve pedestrian, bicycle and vehicular safety. The projects that are generated from this plan that are identified for funding, will be evaluated for their environmental justice impacts.

ATTACHMENT E
LABOR AND WORKFORCE

1. Efforts to Support Good-Paying Jobs and Strong Labor Standards

The Recipient states that rows marked with "X" in the following table are accurate:

	The Recipient demonstrate, to the full extent possible consistent with the law, an effort to create good-paying jobs with the free and fair choice to join a union and incorporation of high labor standards. *(Identify the relevant agreements and describe the scope of activities they cover in the supporting narrative below.)*
	The Recipient or a project partner has adopted the use of local and economic hiring preferences in the overall delivery and implementation of the Project. *(Describe the relevant provisions in the supporting narrative below.)*
	The Recipient or a project partner has adopted the use of registered apprenticeships in the overall delivery and implementation of the Project. *(Describe the use of registered apprenticeship in the supporting narrative below.)*
	The Recipient or a project partner will provide training and placement programs for underrepresented workers in the overall delivery and implementation of the Project. *(Describe the training programs in the supporting narrative below.)*
	The Recipient or a project partner will support free and fair choice to join a union in the overall delivery and implementation of the Project by investing in workforce development services offered by labor-management training partnerships or setting expectations for contractors to develop labor-management training programs. *(Describe the workforce development services offered by labor-management training partnerships in the supporting narrative below.)*
	The Recipient or a project partner will provide supportive services and cash assistance to address systemic barriers to employment to be able to participate and thrive in training and employment, including childcare, emergency cash assistance for items such as tools, work clothing, application fees and other costs of apprenticeship or required pre-employment training, transportation and travel to training and work sites, and services aimed at helping to retain underrepresented groups like mentoring, support groups, and peer networking. *(Describe the supportive services and/or cash assistance provided to trainees and employees in the supporting narrative below.)*
	The Recipient or a project partner has documented agreements or ordinances in place to hire from certain workforce programs that serve underrepresented groups. *(Identify the relevant agreements and describe the scope of activities they cover in the supporting narrative below.)*

	The Recipient or a project partner participates in a State/Regional/Local comprehensive plan to promote equal opportunity, including removing barriers to hire and preventing harassment on work sites, and that plan demonstrates action to create an inclusive environment with a commitment to equal opportunity, including: a. affirmative efforts to remove barriers to equal employment opportunity above and beyond complying with Federal law; b. proactive partnerships with the U.S. Department of Labor's Office of Federal Contract Compliance Programs to promote compliance with EO 11246 Equal Employment Opportunity requirements and meet the requirements as outlined in the Notice of Funding Opportunity to make good faith efforts to meet the goals of 6.9 percent of construction project hours being performed by women and goals that vary based on geography for construction work hours and for work being performed by people of color; c. no discriminatory use of criminal background screens and affirmative steps to recruit and include those with former justice involvement, in accordance with the Fair Chance Act and equal opportunity requirements. d. efforts to prevent harassment based on race, color, religion, sex, sexual orientation, gender identity, and national origin; e. training on anti-harassment and third-party reporting procedures covering employees and contractors; and f. maintaining robust anti-retaliation measures covering employees and contractors. *(Describe the equal opportunity plan in the supporting narrative below.)*
	The Recipient has taken other actions related to the Project to create good-paying jobs with the free and fair choice to join a union and incorporate strong labor standards. *(Describe those actions in the supporting narrative below.)*
x	The Recipient has not yet taken actions related to the Project to create good-paying jobs with the free and fair choice to join a union and incorporate strong labor standards but, before beginning construction of the project, will take relevant actions described in the supporting narrative below.
	The Recipient has not taken actions related to the Project to improving good-paying jobs and strong labor standards and will not take those actions under this award.

2. Supporting Narrative.

This project includes development of a comprehensive safety plan which will identify a slate of projects and programs to improve pedestrian, bicycle and vehicular safety. The projects that are generated from this plan that are identified for funding, will be evaluated for their ability to create good paying jobs, with the free and fair choice to join a union and incorporate strong labor standards.

ATTACHMENT F
CRITICAL INFRASTRUCTURE SECURITY AND RESILIENCE

1. Efforts to strengthen the Security and Resilience of Critical Infrastructure against both Physical and Cyber Threats.

The Recipient states that rows marked with "X" in the following table are accurate:

	The Recipient demonstrates, prior to the signing of this agreement, effort to consider and address physical and cyber security risks relevant to the transportation mode and type and scale of the activities.
	The Recipient appropriately considered and addressed physical and cyber security and resilience in the planning, design and oversight of the project, as determined by the Department and the Department of Homeland Security.
X	The Recipient complies with 2 CFR 200.216 and the prohibition on certain telecommunications and video surveillance services or equipment.
	For projects in floodplains: The Recipient appropriately considered whether the project was upgraded consistent with the Federal Flood Risk Management Standard, to the extent consistent with current law, in Executive Order 14030, Climate-Related Financial Risk (86 FR 27967), and Executive Order 13690, Establishing a Federal Flood Risk Management Standard and a Process for Further Solicit and Considering Stakeholder Input (80 FR 6425).

2. Supporting Narrative.

The City of Pueblo has an internal polity that is Trade Agreements Act (TAA) compliant, meaning that procured equipment cannot be made in certain countries, including but not limited to, China and India.

U.S. DEPARTMENT OF TRANSPORTATION

GENERAL TERMS AND CONDITIONS UNDER THE FISCAL YEAR 2022 SAFE STREETS AND ROADS FOR ALL ("SS4A") GRANT PROGRAM: FHWA PROJECTS

Revision date: March 28, 2023

Table of Contents

Article 7 Purpose 6
7.1 Purpose 6
Article 8 USDOT Role 6
8.1 Division of USDOT Responsibilities 6
8.2 USDOT Program Contacts 7
Article 9 Recipient Role 7
9.1 Statements on the Project 7
9.2 Statements on Authority and Capacity 7
9.3 USDOT Reliance 8
9.4 Project Delivery 8
9.5 Rights and Powers Affecting the Project 8
9.6 Notification of Changes to Key Personnel 9
Article 10 Award Amount, Obligation, and Time Periods 9
10.1 Federal Award Amount 9
10.2 Federal Obligations 9
10.3 Budget Period 9
10.4 Period of Performance 9
Article 11 Statement of Work, Schedule, and Budget Changes 9
11.1 Notification Requirement 9
11.2 Statement of Work Changes 10
11.3 Schedule Changes 10
11.4 Budget Changes 10
11.5 USDOT Acceptance of Changes 11
Article 12 General Reporting Terms 11
12.1 Report Submission 11
12.2 Alternative Reporting Methods 11
12.3 Paperwork Reduction Act Notice 11
Article 13 Progress and Financial Reporting 12
13.1 Quarterly Program Performance Reports 12
13.2 Quarterly Financial Status 12
Article 14 Performance Reporting 12
14.1 Baseline Performance Measurement 12
14.2 Section 24112(h) Report 12
Article 15 Noncompliance and Remedies 13
15.1 Noncompliance Determinations 13
15.2 Remedies 14
15.3 Other Oversight Entities 15
Article 16 Agreement Termination 15
16.1 USDOT Termination 15
16.2 Closeout Termination 16
16.3 Post-Termination Adjustments 16
16.4 Non-Terminating Events 16
16.5 Other Remedies 16
Article 17 Monitoring, Financial Management, Controls, and Records 16
17.1 Recipient Monitoring and Record Retention 16
17.2 Financial Records and Audits 17
17.3 Internal Controls 17
17.4 USDOT Record Access 17

Article 18 Contracting and Subawards 17
18.1 Build America, Buy America. 17
18.2 Small and Disadvantaged Business Requirements. 20
18.3 Engineering and Design Services. 20
18.4 Foreign Market Restrictions 20
18.5 Prohibition on Certain Telecommunications and Video Surveillance Services or Equipment 20
18.6 Recipient Responsibilities For Subawards 20
18.7 Subaward and Contract Authorization. 20
Article 19 Costs, Payments, and Unexpended Funds 20
19.1 Limitation of Federal Award Amount. 20
19.2 Projects Costs. 21
19.3 Timing of Project Costs. 21
19.4 Recipient Recovery of Federal Funds. 21
19.5 Unexpended Federal Funds. 21
19.6 Timing of Payments to the Recipient. 21
19.7 Payment Method. 21
19.8 Information Supporting Expenditures 21
19.9 Reimbursement Frequency. 22
Article 20 Liquidation, Adjustments, and Funds Availability 22
20.1 Liquidation of Recipient Obligations 22
Article 21 Agreement Modifications 22
21.1 Bilateral Modifications. 22
21.2 Unilateral Contact Modifications. 22
21.3 USDOT Unilateral Modifications. 22
21.4 Other Modifications. 22
Article 22 Climate Change and Environmental Justice 23
22.1 Climate Change and Environmental Justice. 23
Article 23 Racial Equity and Barriers to Opportunity 23
23.1 Racial Equity and Barriers to Opportunity 23
Article 24 Federal Financial Assistance, Administrative, and National Policy Requirements 23
24.1 Uniform Administrative Requirements for Federal Awards 23
24.2 Federal Law and Public Policy Requirements. 23
24.3 Federal Freedom of Information Act. 23
24.4 History of Performance. 23
24.5 Whistleblower Protection 24
24.6 External Award Terms and Obligations 24
24.7 Incorporated Certifications. 24
Article 25 Assignment 25
25.1 Assignment Prohibited. 25
Article 26 Waiver 25
26.1 Waivers. 25
Article 27 Additional Terms and Conditions 25
27.1 Effect of Action Plan or Implementation Plan. 25
27.2 Disclaimer of Federal Liability. 25
27.3 Environmental Review 25
27.4 Railroad Coordination. 27
27.5 Relocation and Real Property Acquisition. 27
27.6 Equipment Disposition 27
Article 28 Mandatory Award Information 27
28.1 Information Contained in a Federal Award. 27

Article 29 Construction and Definitions 28
29.1 Attachments. 28
29.2 Exhibits. 28
29.3 Construction. 28
29.4 Integration. 28
29.5 Definitions. 28
Article 30 Agreement Execution and Effective Date 29
30.1 Counterparts. 29
30.2 Effective Date. 29

Index of Definitions

Administering Operating Administration 7
Environmental Review Entity 25
Federal Share 11
FHWA 7
NOFO 6
OMB 11
Program Statute 28
Project 19
Project Closeout 16
SS4A Grant 28
USDOT 6

GENERAL TERMS AND CONDITIONS

The Infrastructure Investment and Jobs Act (Pub. L. 117–58, November 15, 2021; also referred to as the "Bipartisan Infrastructure Law" or "BIL") established the Safe Streets and Roads for All (SS4A) Discretionary Grant Program (BIL Section 24112) and appropriated funds to the United States Department of Transportation (the "**USDOT**") under Division J, Title VIII of BIL to implement the program. The funds are available to provide Federal financial assistance to support local initiatives to prevent death and serious injury on roads and streets, commonly referred to as "Vision Zero" or "Toward Zero Deaths" initiatives.

The USDOT published a Notice of Funding Opportunity (the "**NOFO**") to solicit applications for Federal financial assistance in Fiscal Year 2022 for the SS4A Discretionary Grant Program (87 Fed. Reg. 31606 (May 24, 2022; subsequently amended in 87 Fed. Reg. 47818 on August 4, 2022).

These general terms and conditions are incorporated by reference in a project-specific grant agreement under the fiscal year 2022 SS4A grant program. Articles 1–6 are in the project-specific portion of the agreement. The term "Recipient" is defined in the project-specific portion of the agreement. Attachments A through D are project-specific attachments.

ARTICLE 7
PURPOSE

7.1 Purpose. The purpose of this award is to improve roadway safety by significantly reducing or eliminating roadway fatalities and serious injuries through safety action plan development or projects focused on all users, including pedestrians, bicyclists, public transportation users, motorists, personal conveyance and micromobility users, and commercial vehicle operators. The parties will accomplish that purpose by achieving the following objectives:

(1) timely completing the Project; and

(2) ensuring that this award does not substitute for non-Federal investment in the Project, except as proposed in the Grant Application, as modified by section 3.3 and Attachment B.

ARTICLE 8
USDOT ROLE

8.1 Division of USDOT Responsibilities.

(a) The Office of the Secretary of Transportation is ultimately responsible for the USDOT's administration of the SS4A Grant Program.

(b) The Federal Highway Administration (the "**FHWA**") will administer this grant agreement on behalf of the USDOT. In this agreement, the "**Administering Operating Administration**" means the FHWA.

8.2 USDOT Program Contacts.

FHWA Safe Streets and Roads for All
Federal Highway Administration
Office of Safety
1200 New Jersey Avenue SE
HSA-1, Mail Drop E71-117
Washington, DC 20590
SS4A.FHWA@dot.gov
(202) 366-2201

and

[enter FHWA Division Office lead point of contact]
[enter address]
[enter email address]
[enter telephone]

ARTICLE 9
RECIPIENT ROLE

9.1 Statements on the Project. The Recipient states that:

(1) all material statements of fact in the Grant Application were accurate when that application was submitted; and

(2) Attachment B documents all material changes in the information contained in that application.

9.2 Statements on Authority and Capacity. The Recipient states that:

(1) it has the authority to receive Federal financial assistance under this agreement;

(2) It has the legal authority to complete the Project, including either ownership and/or maintenance responsibilities over a roadway network; safety responsibilities that affect roadways; or has an agreement from the agency that has ownership and/or maintenance responsibilities for the roadway within the applicant's jurisdiction; if applicable.

(3) it has the capacity, including institutional, managerial, and financial capacity, to comply with its obligations under this agreement;

(4) not less than the difference between the "Total Eligible Project Cost" and the "SS4A Grant Amount" listed in section 3.3 are committed to fund the Project;

(5) it has sufficient funds available, or an agreement with the agency that has ownership and/or maintenance responsibilities for the roadway within the recipient's jurisdiction, to ensure that infrastructure completed or improved under this agreement will be operated and maintained in compliance with this agreement and applicable Federal law; and

(6) the individual executing this agreement on behalf of the Recipient has authority to enter this agreement and make the statements in this article 9 and in section 24.7 on behalf of the Recipient.

9.3 USDOT Reliance. The Recipient acknowledges that:

(1) the USDOT relied on statements of fact in the Grant Application to select the Project to receive this award;

(2) the USDOT relied on statements of fact in both the-Grant Application and this agreement to determine that the Recipient and the Project are eligible under the terms of the NOFO;

(3) the USDOT relied on statements of fact in both the Grant Application and this agreement to establish the terms of this agreement; and

(4) the USDOT's selection of the Project to receive this award prevented awards under the NOFO to other eligible applicants.

9.4 Project Delivery.

(a) The Recipient shall complete the Project under the terms of this agreement.

(b) The Recipient shall ensure that the Project is financed, constructed, operated, and maintained in accordance with all applicable Federal laws, regulations, and policies.

(c) The Recipient shall provide any certifications or assurances deemed necessary by the USDOT in ensuring the Recipient's compliance with all applicable laws, regulations, and policies.

(d) The Recipient shall provide access to records as provided at 2 CFR 200.337.

9.5 Rights and Powers Affecting the Project.

(a) The Recipient shall not take or permit any action that deprives it of any rights or powers necessary to the Recipient's performance under this agreement without written approval of the USDOT.

(b) The Recipient shall act, in a manner acceptable to the USDOT, promptly to acquire, extinguish, or modify any outstanding rights or claims of right of others that would interfere with the Recipient's performance under this agreement.

9.6 Notification of Changes to Key Personnel. The Recipient shall notify all USDOT representatives who are identified in Section 4.4 in writing within 30 calendar days of any change in key personnel who are identified in Section 4.3.

ARTICLE 10
AWARD AMOUNT, OBLIGATION, AND TIME PERIODS

10.1 Federal Award Amount The USDOT hereby awards a SS4A Grant to the Recipient in the amount listed in Section 2.2 as the SS4A Grant Amount.

10.2 Federal Obligations.

This agreement obligates for the period of performance listed in section 2.3 of the grant agreement.

10.3 Budget Period

The budget period for this award begins on the date of this agreement and ends on the budget period end date that is listed in section 2.4, which shall be no later than 5 years from the date of grant execution. In this agreement, "budget period" is used as defined at 2 C.F.R. 200.1.

10.4 Period of Performance.

(a) The period of performance for this award begins on the effective date of award listed in page 1 item 2 and ends on the period of performance end date that is listed in Section 2.3.

(b) In this agreement, "period of performance" is used as defined at 2 C.F.R. 200.1.

ARTICLE 11
STATEMENT OF WORK, SCHEDULE, AND BUDGET CHANGES

11.1 Notification Requirement. The Recipient shall notify all USDOT representatives who are identified in section 4.4 in writing within 30 calendar days of any change in circumstances or commitments that adversely affect the Recipient's plan to complete the Project. In that notification, the Recipient shall describe the change and what actions the Recipient has taken or plans to take to ensure completion of the Project. This notification requirement under this section 11.1 is separate from any requirements under this article 11 that the Recipient request amendment of this agreement.

11.2 Statement of Work Changes. If the Project's activities differ from the statement of work that is described in section 3.1 and Attachment B, then the Recipient shall request an amendment of this agreement to update section 3.1.

11.3 Schedule Changes. If one or more of the following conditions are satisfied, then the Recipient shall request an amendment of this agreement to update the relevant dates:

(1) a substantial completion date for the Project or a component of the Project is listed in section 3.2 and the Recipient's estimate for that milestone changes to a date that is more than six months after the date listed in section 3.2; or

(2) a schedule change would require the period of performance to continue after the period of performance end date listed in section 2.3.

For other schedule changes, the Recipient shall request an amendment of this agreement unless the USDOT has consented, in writing consistent with applicable requirements, to the change.

11.4 Budget Changes.

(a) The Recipient acknowledges that if the cost of completing the Project increases:

(1) that increase does not affect the Recipient's obligation under this agreement to complete the Project; and

(2) the USDOT will not increase the amount of this award to address any funding shortfall.

(b) The Recipient shall request an amendment of this agreement to update section 3.3 and Attachment B if, in comparing the Project's budget to the amounts listed in section 3.3:

(1) the "Non-Federal Funds" amount decreases; or

(2) the "Total Eligible Project Cost" amount decreases.

(c) For budget changes that are not identified in section 11.4(b), the Recipient shall request an amendment of this agreement to update section 3.3 and Attachment B unless the USDOT has consented, in writing consistent with applicable requirements, to the change.

(d) If the actual eligible project costs are less than the "Total Eligible Project Cost" that is listed in section 3.3, then the Recipient may propose to the USDOT, in writing consistent with applicable requirements, specific additional activities that are within the scope of this award, as defined in sections 7.1 and 3.1, and that the Recipient could complete with the difference between the "Total Eligible Project Cost" that is listed in section 3.3 and the actual eligible project costs.

(e) If the actual eligible project costs are less than the "Total Eligible Project Cost" that is listed in section 3.3 and either the Recipient does not make a proposal under section

11.4(d) or the USDOT does not accept the Recipient's proposal under section 11.4(d), then:

(1) in a request under section 11.4(b), the Recipient shall reduce the Federal Share by the difference between the "Total Eligible Project Cost" that is listed in section 3.3 and the actual eligible project costs; and

(2) if that amendment reduces this award and the USDOT had reimbursed costs exceeding the revised award, the Recipient shall request to add additional project work that is within the scope of this project.

In this agreement, "**Federal Share**" means the sum of the "SS4A Action Plan or Implementation Grant Amount" and the "Other Federal Funds" amounts that are listed in section 3.3.

(f) The Recipient acknowledges that amounts that are required to be refunded under section 11.4(e)(2) constitute a debt to the Federal Government that the USDOT may collect under 2 C.F.R. 200.346 and the Federal Claims Collection Standards (31 C.F.R. parts 900–999).

11.5 USDOT Acceptance of Changes. The USDOT may accept or reject amendments requested under this article 11, and in doing so may elect to consider only the interests of the SS4A grant program and the USDOT. The Recipient acknowledges that requesting an amendment under this article 11 does not amend, modify, or supplement this agreement unless the USDOT accepts that amendment request and the parties modify this agreement under section 21.1.

ARTICLE 12
GENERAL REPORTING TERMS

12.1 Report Submission. The Recipient shall send all reports required by this agreement to all USDOT contacts who are listed in section 4.4. Reports will be added to a central repository maintained by FHWA.

12.2 Alternative Reporting Methods. FHWA may establish processes for the Recipient to submit reports required by this agreement, including electronic submission processes. If the Recipient is notified of those processes in writing, the Recipient shall use the processes required by the FHWA.

12.3 Paperwork Reduction Act Notice.

Under 5 C.F.R. 1320.6, the Recipient is not required to respond to a collection of information that does not display a currently valid control number issued by the Office of Management and Budget (the "**OMB**"). Collections of information conducted under this agreement are approved under OMB Control No. 2125-0675.

ARTICLE 13
PROGRESS AND FINANCIAL REPORTING

13.1 Quarterly Program Performance Reports. Quarterly, on or before the 20th day of the first month of each calendar year (e.g., reports due on or before January 20th, April 20th, August 20th, and December 20th) and until the end of the period of performance, the Recipient shall submit to the USDOT a Quarterly Project Progress Report in the format and with the content described in Exhibit C (SF-PPR). If the date of this agreement is in the final month of a calendar year, then the Recipient shall submit the first Quarterly Project Progress Report in the second calendar year that begins after the date of this agreement.

13.2 Quarterly Financial Status. Quarterly, on or before the 20th day of the first month of each calendar year, the Recipient shall submit a Federal Financial Report using SF-425.

ARTICLE 14
PERFORMANCE REPORTING

14.1 Baseline Performance Measurement. If the Designation in Section 2.5 is "Implementation," then:

(1) the Recipient shall collect data for each performance measure that is identified in the Performance Measure Table in Attachment A, accurate as of the Baseline Measurement Date that is identified in Attachment A; and

(2) on or before the Baseline Report Date that is stated in Attachment A, the Recipient shall submit a Baseline Performance Measurement Report that contains the data collected under this section 14.1 and a detailed description of the data sources, assumptions, variability, and estimated levels of precision for each performance measure that is identified in the Performance Measure Table in Attachment A.

14.2 Section 24112(h) Report: The Recipient shall submit to the USDOT, not later than 120 days after the end of the period of performance, a report that describes, consistent with section 24112(g) of BIL:

(1) the costs of carrying out the project;

(2) the outcomes and benefits that each eligible project generated as identified in the grant application and measured by data to the maximum extent practicable (i.e. number of fatalities and serious injuries that occurred within the limits of the project location); and

(3) the lessons learned, and any recommendations related to future projects or strategies to prevent death and serious injuries on roads and streets.

14.3 Performance Measurement Information.

For each performance measure that is identified in the Performance Measure Table in Attachment A, not later than January 31 of each year that follows a calendar year within the period of performance during which data was collected, the Recipient shall submit to the USDOT a Performance Measurement Report containing the data collected in the previous calendar year and stating the dates when the data was collected.

14.4 Performance Reporting Survival.

The data collection and reporting requirements in this article 14 survive the termination of this agreement which is three years post period of performance.

14.5 Program Evaluation.

As a condition of grant award, the recipient may be required to participate in an evaluation undertaken by USDOT, or another agency or partner. The evaluation may take different forms such as an implementation assessment across grant recipients, an impact and/or outcomes analysis of all or selected sites within or across grant recipients, or a benefit/cost analysis or assessment of return on investment. The Department may require applicants to collect data elements to aid the evaluation. As a part of the evaluation, as a condition of award, grant recipients must agree to: (1) make records available to the evaluation contractor; (2) provide access to program records, and any other relevant documents to calculate costs and benefits; (3) in the case of an impact analysis, facilitate the access to relevant information as requested; and (4) follow evaluation procedures as specified by the evaluation contractor or USDOT staff.

ARTICLE 15
NONCOMPLIANCE AND REMEDIES

15.1 Noncompliance Determinations.

(a) If the USDOT determines that the Recipient may have failed to comply with the United States Constitution, Federal law, or the terms and conditions of this agreement, the USDOT may notify the Recipient of a proposed determination of noncompliance. For the notice to be effective, it must be written and the USDOT must include an explanation of the nature of the noncompliance, describe a remedy, state whether that remedy is proposed or effective at an already determined date, and describe the process through and form in which the Recipient may respond to the notice.

(b) If the USDOT notifies the Recipient of a proposed determination of noncompliance under section 15.1(a), the Recipient may, not later than 7 calendar days after the notice, respond to that notice in the form and through the process described in that notice. In its response, the Recipient may:

(1) accept the remedy;

(2) acknowledge the noncompliance, but propose an alternative remedy; or

(3) dispute the noncompliance.

To dispute the noncompliance, the Recipient must include in its response documentation or other information supporting the Recipient's compliance.

(c) The USDOT may make a final determination of noncompliance only:

(1) after considering the Recipient's response under section 15.1(b); or

(2) if the Recipient fails to respond under section 15.1(b), after the time for that response has passed.

(d) To make a final determination of noncompliance, the USDOT must provide a notice to the Recipient that states the bases for that determination.

15.2 Remedies.

(a) If the USDOT makes a final determination of noncompliance under section 15.1(d), the USDOT may impose a remedy, including:

(1) additional conditions on the award;

(2) any remedy permitted under 2 C.F.R. 200.339–200.340, including withholding of payments; disallowance of previously reimbursed costs, requiring refunds from the Recipient to USDOT; suspension or termination of the award; or suspension and disbarment under 2 C.F.R. part 180; or

(3) any other remedy legally available.

(b) To impose a remedy, the USDOT must provide a written notice to the Recipient that describes the remedy, but the USDOT may make the remedy effective before the Recipient receives that notice.

(c) If the USDOT determines that it is in the public interest, the USDOT may impose a remedy, including all remedies described in section 15.2(a), before making a final determination of noncompliance under section 15.1(d). If it does so, then the notice provided under section 15.1(d) must also state whether the remedy imposed will continue, be rescinded, or modified.

(d) In imposing a remedy under this section 15.2 or making a public interest determination under section 15.2(c), the USDOT may elect to consider the interests of only the USDOT.

(e) The Recipient acknowledges that amounts that the USDOT requires the Recipient to refund to the USDOT due to a remedy under this section 15.2 constitute a debt to the

Federal Government that the USDOT may collect under 2 C.F.R. 200.346 and the Federal Claims Collection Standards (31 C.F.R. parts 900–999).

15.3 Other Oversight Entities.

Nothing in this article 15 limits any party's authority to report activity under this agreement to the United States Department of Transportation Inspector General or other appropriate oversight entities.

ARTICLE 16
AGREEMENT TERMINATION

16.1 USDOT Termination.

(a) The USDOT may terminate this agreement and all of its obligations under this agreement if any of the following occurs:

(1) the Recipient fails to obtain or provide any non-SS4A Grant contribution (all eligible project costs other than the SS4A Grant Amount, as described in section 3.2 table (a) of the grant agreement) or alternatives approved by the USDOT as provided in this agreement and consistent with article 3;

(2) a construction start date for the Project or Strategy is listed in section 3.2 and the Recipient fails to meet that milestone by six months after the date listed in section 3.2;

(3) a substantial completion date for the Project or Strategy is listed in section 3.2 and the Recipient fails to meet that milestone by six months after the date listed in section 3.2;

(4) the Recipient fails to comply with the terms and conditions of this agreement, including a material failure to comply with the schedule in section 3.2 even if it is beyond the reasonable control of the Recipient; or,

(5) the USDOT determines that termination of this agreement is in the public interest.

(6) the Recipient fails to expend the funds within 5 years after the date on which the government executes the grant agreement, which is the date funds are provided for the project.

(b) In terminating this agreement under this section, the USDOT may elect to consider only the interests of the USDOT.

(c) This section 16.1 does not limit the USDOT's ability to terminate this agreement as a remedy under section 15.2.

(d) The Recipient may request that the USDOT terminate the agreement under this section 16.1.

16.2 Closeout Termination.

(a) This agreement terminates on Project Closeout.

(b) In this agreement, "**Project Closeout**" means the date that the USDOT notifies the Recipient that the award is closed out. Under 2 C.F.R. 200.344, Project Closeout should occur no later than one year after the end of the period of performance.

16.3 Post-Termination Adjustments. The Recipient acknowledges that under 2 C.F.R. 200.345–200.346, termination of the agreement does not extinguish the USDOT's authority to disallow costs, including costs that USDOT reimbursed before termination, and recover funds from the Recipient.

16.4 Non-Terminating Events.

(a) The end of the period of performance described under section 10.4 does not terminate this agreement or the Recipient's obligations under this agreement.

(b) The liquidation of funds under section 20.1 does not terminate this agreement or the Recipient's obligations under this agreement.

16.5 Other Remedies. The termination authority under this article 16 supplements and does not limit the USDOT's remedial authority under article 15 or 2 C.F.R. part 200, including 2 C.F.R. 200.339–200.340.

ARTICLE 17
MONITORING, FINANCIAL MANAGEMENT, CONTROLS, AND RECORDS

17.1 Recipient Monitoring and Record Retention.

(a) The Recipient shall monitor activities under this award, including activities under subawards and contracts, to ensure:

(1) that those activities comply with this agreement; and

(2) that funds provided under this award are not expended on costs that are not allowable under this award or not allocable to this award.

(b) If the Recipient makes a subaward under this award, the Recipient shall monitor the activities of the subrecipient in compliance with 2 C.F.R. 200.332(d).

(c) The Recipient shall retain records relevant to the award as required under 2 C.F.R. 200.334.

17.2 Financial Records and Audits.

(a) The Recipient shall keep all project accounts and records that fully disclose the amount and disposition by the Recipient of the award funds, the total cost of the Project, and the amount or nature of that portion of the cost of the Project supplied by other sources, and any other financial records related to the project.

(b) The Recipient shall keep accounts and records described under section 17.2(a) in accordance with a financial management system that meets the requirements of 2 C.F.R. 200.301–200.303, 2 C.F.R. part 200, subpart F, and title 23, United States Code, and will facilitate an effective audit in accordance with 31 U.S.C. 7501–7506.

(c) The Recipient shall separately identify expenditures under the fiscal year 2022 SS4A grants program in financial records required for audits under 31 U.S.C. 7501–7506. Specifically, the Recipient shall:

(1) list expenditures under that program separately on the schedule of expenditures of Federal awards required under 2 C.F.R. part 200, subpart F, including "FY 2022" in the program name; and

(2) list expenditures under that program on a separate row under Part II, Item 1 ("Federal Awards Expended During Fiscal Period") of Form SF-SAC, including "FY 2022" in column c ("Additional Award Identification").

17.3 Internal Controls. The Recipient shall establish and maintain internal controls as required under 2 C.F.R. 200.303.

17.4 USDOT Record Access. The USDOT may access Recipient records related to this award under 2 C.F.R. 200.337.

ARTICLE 18
CONTRACTING AND SUBAWARDS

18.1 Build America, Buy America. This award term implements § 70914(a) of the Build America, Buy America Act, Pub. L. No. 117-58, div. G, tit. IX, subtitle A, 135 Stat. 429, 1294 (2021) and Office of Management and Budget (OMB) Memorandum M-22-11, "Initial Implementation Guidance on Application of Buy America Preference in Federal Financial Assistance Programs for Infrastructure."

Requirement to Use Iron, Steel, Manufactured Products, and Construction Materials Produced in the United States.

The Recipient shall not use funds provided under this award for a project for infrastructure unless:

(1) all iron and steel used in the project are produced in the United States—this means all manufacturing processes, from the initial melting stage through the application of coatings, occurred in the United States;

(2) all manufactured products used in the project are produced in the United States—this means the manufactured product was manufactured in the United States; and the cost of the components of the manufactured product that are mined, produced, or manufactured in the United States is greater than 55 percent of the total cost of all components of the manufactured product; and

(3) all construction materials are manufactured in the United States—this means that all manufacturing processes for the construction material occurred in the United States.

Inapplicability.

The domestic content procurement preference in this award term only applies to articles, materials, and supplies that are consumed in, incorporated into, or affixed to an infrastructure project. As such, it does not apply to tools, equipment, and supplies, such as temporary scaffolding, brought to the construction site and removed at or before the completion of the infrastructure project. Nor does a Buy America preference apply to equipment and furnishings, such as movable chairs, desks, and portable computer equipment, that are used at or within the finished infrastructure project but are not an integral part of the structure or permanently affixed to the infrastructure project.

Waivers.

When necessary, the Recipient may apply for, and the USDOT may grant, a waiver from the domestic content procurement preference in this award term.

A request to waive the application of the domestic content procurement preference must be in writing. The USDOT will provide instructions on the waiver process and on the format, contents, and supporting materials required for any waiver request. Waiver requests are subject to public comment periods of no less than 15 days and must be reviewed by the Office of Management and Budget (OMB) Made in America Office.

When the USDOT has made a determination that one of the following exceptions applies, the awarding official may waive the application of the domestic content procurement preference in any case in which the USDOT determines that:

(1) applying the domestic content procurement preference would be inconsistent with the public interest;

(2) the types of iron, steel, manufactured products, or construction materials are not produced in the United States in sufficient and reasonably available quantities or of a satisfactory quality; or

(3) the inclusion of iron, steel, manufactured products, or construction materials produced in the United States will increase the cost of the overall project by more than 25 percent.

There may be instances where an award qualifies, in whole or in part, for an existing waiver described at https://www.transportation.gov/office-policy/transportation-policy/made-in-america.

Definitions

"Construction materials" includes an article, material, or supply—other than an item of primarily iron or steel; a manufactured product; cement and cementitious materials; aggregates such as stone, sand, or gravel; or aggregate binding agents or additives—that is or consists primarily of:

- non-ferrous metals;
- plastic and polymer-based products (including polyvinylchloride, composite building materials, and polymers used in fiber optic cables);
- glass (including optic glass);
- lumber; or
- drywall.

"Domestic content procurement preference" means all iron and steel used in the project are produced in the United States; the manufactured products used in the project are produced in the United States; or the construction materials used in the project are produced in the United States.

"Primarily iron or steel" means that the cost of the iron and steel content in the article, material, or supply exceeds 50 percent of the total cost of all its components. The cost of iron and steel is the cost of the iron or steel mill products (such as bar, billet, slab, wire, plate, or sheet), castings, or forgings utilized in the manufacture of the product and a good faith estimate of the cost of iron or steel components. The origin of the elements of the iron or steel is not relevant to the determination of whether it is domestic or foreign.

"Project" means the construction, alteration, maintenance, or repair of infrastructure in the United States.

(a) Construction materials used in the Project are subject to the domestic preference requirement at § 70914 of the Build America, Buy America Act, Pub. L. No. 117-58, div. G, tit. IX, subtitle A, 135 Stat. 429, 1294 (2021), as implemented by OMB, USDOT, and FHWA. The Recipient acknowledges that this agreement is neither a waiver of § 70914(a) nor a finding under § 70914(b).

(b) Under 2 C.F.R. 200.322, as appropriate and to the extent consistent with law, the Recipient should, to the greatest extent practicable under this award, provide a preference for the purchase, acquisition, or use of goods, products, or materials produced in the United States. The Recipient shall include the requirements of 2 C.F.R. 200.322 in all subawards including all contracts and purchase orders for work or products under this award.

18.2 Small and Disadvantaged Business Requirements. The Recipient shall expend all funds under this award in compliance with the requirements at 2 C.F.R. 200.321 ("Contracting with small and minority businesses, women's business enterprises, and labor surplus area firms").

18.3 Engineering and Design Services. The Recipient shall award each contract or sub-contract for program management, construction management, planning studies, feasibility studies, architectural services, preliminary engineering, design, engineering, surveying, mapping, or related services with respect to the project in the same manner that a contract for architectural and engineering services is negotiated under 2 CFR 200.320or an equivalent qualifications-based requirement prescribed for or by the Recipient.

18.4 Foreign Market Restrictions. The Recipient shall not allow funds provided under this award to be used to fund the use of any product or service of a foreign country during the period in which such foreign country is listed by the United States Trade Representative as denying fair and equitable market opportunities for products and suppliers of the United States in procurement and construction.

18.5 Prohibition on Certain Telecommunications and Video Surveillance Services or Equipment. The Recipient acknowledges that Section 889 of Pub. L. No. 115-232, 2 C.F.R. 200.216 and 2 C.F.R. 200.471 prohibit the Recipient and all subrecipients from procuring or obtaining certain telecommunications and video surveillance services or equipment under this award.

18.6 Recipient Responsibilities For Subawards. If the Recipient makes a subaward under this award, the Recipient shall comply with the requirements on pass-through entities under 2 C.F.R. parts 200 and 1201, including 2 C.F.R. 200.331–200.333.

18.7 Subaward and Contract Authorization.

If the USDOT Office for Subaward and Contract Authorization identified in section 5.1 is "FHWA Office of Acquisition and Grants Management," then the Recipient shall obtain prior written approval from the USDOT agreement officer for the subaward or contracting out of any work under this agreement for Action Plan awards. This provision does not apply to the acquisition of supplies, material, equipment or general support services. That approval will be contingent upon a fair and reasonable price determination on the part of the Recipient and the agreement officer's concurrence on that determination.

ARTICLE 19
COSTS, PAYMENTS, AND UNEXPENDED FUNDS

19.1 Limitation of Federal Award Amount. Under this award, the USDOT shall not provide funding greater than the amount obligated on the SS4A Grant cover page, Item 11, Federal Funds Obligated. The Recipient acknowledges that USDOT is not liable for

payments exceeding that amount, and the Recipient shall not request reimbursement of costs exceeding that amount.

19.2 Projects Costs. This award is subject to the cost principles at 2 C.F.R. part 200 subpart E, including provisions on determining allocable costs and determining allowable costs.

19.3 Timing of Project Costs.

(a) The Recipient shall not charge to this award costs that are incurred after the period of performance.

(b) The Recipient shall not charge to this award costs that were incurred before the effective date of award of this agreement, unless there has been an approval pre-award costs under 2 C.F.R. 200.458. pre-award costs under 2 C.F.R. 200.458.

19.4 Recipient Recovery of Federal Funds. The Recipient shall make all reasonable efforts, including initiating litigation, if necessary, to recover Federal funds if the USDOT determines, after consultation with the Recipient, that those funds have been spent fraudulently, wastefully, or in violation of Federal laws, or misused in any manner under this award. The Recipient shall not enter a settlement or other final position, in court or otherwise, involving the recovery of funds under the award unless approved in advance in writing by the USDOT.

19.5 Unexpended Federal Funds. Any Federal funds that are awarded at section 10.1 but not expended on allocable, allowable costs remain the property of the United States.

19.6 Timing of Payments to the Recipient. When reimbursement is used, the Recipient shall not request reimbursement of a cost before the Recipient has entered an obligation for that cost.

19.7 Payment Method. The USDOT may deny a payment request that is not submitted using the method identified in section 5.2.

19.8 Information Supporting Expenditures

(a) If the USDOT Payment System identified in section 5.2 is "DELPHI eInvoicing," then when requesting reimbursement of costs incurred or credit for cost share incurred, the Recipient shall electronically submit the SF 270 (Request for Advance or Reimbursement), shall identify the Federal share and the Recipient's share of costs, and shall submit supporting cost detail to clearly document all costs incurred. As supporting cost detail, the Recipient shall include a detailed breakout of all costs incurred, including direct labor, indirect costs, other direct costs, and travel.

(b) If the Recipient submits a request for reimbursement that the USDOT determines does not include or is not supported by sufficient detail, the USDOT may deny the request or withhold processing the request until the Recipient provides sufficient detail.

19.9 Reimbursement Frequency. If the USDOT Payment System identified in section 5.2 is "DELPHI eInvoicing," then the Recipient shall not request reimbursement more frequently than monthly.

ARTICLE 20
LIQUIDATION, ADJUSTMENTS, AND FUNDS AVAILABILITY

20.1 Liquidation of Recipient Obligations.

(a) The Recipient shall liquidate all obligations of award funds under this agreement not later than the earlier of (1) 120 days after the end of the period of performance or (2) the statutory availability to eligible entities date, which shall be 5 years after the date on which the grant is provided.

(b) Liquidation of obligations and adjustment of costs under this agreement follow the requirements of 2 C.F.R. 200.344–200.346.

ARTICLE 21
AGREEMENT MODIFICATIONS

21.1 Bilateral Modifications. The parties may amend, modify, or supplement this agreement by mutual agreement in writing signed by the USDOT and the Recipient. Either party may request to amend, modify, or supplement this agreement by written notice to the other party.

21.2 Unilateral Contact Modifications.

(a) The USDOT may update the contacts who are listed in sections 4.4 by written notice to all of the Recipient contacts who are listed in section 4.3.

21.3 USDOT Unilateral Modifications.

(a) The USDOT may unilaterally modify this agreement to comply with Federal law, including the Program Statute.

(b) To unilaterally modify this agreement under this section 21.3(a), the USDOT must provide a notice to the Recipient that includes a description of the modification and state the date that the modification is effective.

21.4 Other Modifications. The parties shall not amend, modify, or supplement this agreement except as permitted under sections 21.1, 21.2, or 21.3. If an amendment, modification, or supplement is not permitted under section 21.1, not permitted under section 21.2, and not permitted under section 21.3, it is void.

ARTICLE 22
CLIMATE CHANGE AND ENVIRONMENTAL JUSTICE

22.1 Climate Change and Environmental Justice. Consistent with Executive Order 14008, "Tackling the Climate Crisis at Home and Abroad" (Jan. 27, 2021), Attachment C documents the consideration of climate change and environmental justice impacts of the Project.

ARTICLE 23
RACIAL EQUITY AND BARRIERS TO OPPORTUNITY

23.1 Racial Equity and Barriers to Opportunity. Consistent with Executive Order 13985, "Advancing Racial Equity and Support for Underserved Communities Through the Federal Government" (Jan. 20, 2021), Attachment D documents activities related to the Project to improve racial equity and reduce barriers to opportunity.

ARTICLE 24
FEDERAL FINANCIAL ASSISTANCE, ADMINISTRATIVE, AND NATIONAL POLICY REQUIREMENTS

24.1 Uniform Administrative Requirements for Federal Awards. The Recipient shall comply with the obligations on non-Federal entities under 2 C.F.R. parts 200 and 1201.

24.2 Federal Law and Public Policy Requirements.

(a) The Recipient shall ensure that Federal funding is expended in full accordance with the United States Constitution, Federal law, and statutory and public policy requirements: including but not limited to, those protecting free speech, religious liberty, public welfare, the environment, and prohibiting discrimination.

(b) The failure of this agreement to expressly identify Federal law applicable to the Recipient or activities under this agreement does not make that law inapplicable.

24.3 Federal Freedom of Information Act.

(a) The USDOT is subject to the Freedom of Information Act, 5 U.S.C. 552.

(b) The Recipient acknowledges that the Technical Application and materials submitted to the USDOT by the Recipient related to this agreement may become USDOT records subject to public release under 5 U.S.C. 552.

24.4 History of Performance. Under 2 C.F.R 200.206, any Federal awarding agency may consider the Recipient's performance under this agreement when evaluating the risks of making a future Federal financial assistance award to the Recipient.

24.5 Whistleblower Protection.

(a) The Recipient acknowledges that it is a "grantee" within the scope of 41 U.S.C. 4712, which prohibits the Recipient from taking certain actions against an employee for certain disclosures of information that the employee reasonably believes are evidence of gross mismanagement of this award, gross waste of Federal funds, or a violation of Federal law related this this award.

(b) The Recipient shall inform its employees in writing of the rights and remedies provided under 41 U.S.C. 4712, in the predominant native language of the workforce.

24.6 External Award Terms and Obligations.

(a) In addition to this document and the contents described in article 29, this agreement includes the following additional terms as integral parts:

(1) Appendix A to 2 C.F.R. part 25: System for Award Management and Universal Identifier Requirements;

(2) Appendix A to 2 C.F.R. part 170: Reporting Subawards and Executive Compensation;

(3) 2 C.F.R 175.15(b): Trafficking in Persons; and

(4) Appendix XII to 2 C.F.R. part 200: Award Term and Condition for Recipient Integrity and Performance Matters.

(b) The Recipient shall comply with:

(1) 49 C.F.R. part 20: New Restrictions on Lobbying;

(2) 49 C.F.R. part 21: Nondiscrimination in Federally-Assisted Programs of the Department of Transportation—Effectuation of Title VI of the Civil Rights Act of 1964;

(3) 49 C.F.R. part 27: Nondiscrimination on the Basis of Disability in Programs or Activities Receiving Federal Financial Assistance; and

(4) Subpart B of 49 C.F.R. part 32: Governmentwide Requirements for Drug-free Workplace (Financial Assistance).

24.7 Incorporated Certifications. The Recipient makes the statements in the following certifications, which are incorporated by reference:

(1) Appendix A to 49 CFR part 20 (Certification Regarding Lobbying).

ARTICLE 25
ASSIGNMENT

25.1 Assignment Prohibited. The Recipient shall not transfer to any other entity any discretion granted under this agreement, any right to satisfy a condition under this agreement, any remedy under this agreement, or any obligation imposed under this agreement.

ARTICLE 26
WAIVER

26.1 Waivers.

(a) A waiver granted by USDOT under this agreement will not be effective unless it is in writing and signed by an authorized representative of USDOT.

(b) A waiver granted by USDOT under this agreement on one occasion will not operate as a waiver on other occasions.

(c) If USDOT fails to require strict performance of a provision of this agreement, fails to exercise a remedy for a breach of this agreement, or fails to reject a payment during a breach of this agreement, that failure does not constitute a waiver of that provision or breach.

ARTICLE 27
ADDITIONAL TERMS AND CONDITIONS

27.1 Effect of Action Plan or Implementation Plan. Based on information that the Recipient provided to the USDOT, including the Technical Application, at indicated in section 2.5, this agreement designates this award as an Action Plan award or a Implementation award, as defined in the NOFO. The Recipient shall comply with the requirements that accompany that designation on minimum award size, geographic location, and cost sharing.

27.2 Disclaimer of Federal Liability. The USDOT shall not be responsible or liable for any damage to property or any injury to persons that may arise from, or be incident to, performance or compliance with this agreement.

27.3 Environmental Review

(a) In this section, **"Environmental Review Entity"** means:

(1) if the Project is located in a State that has assumed responsibilities for environmental review activities under 23 U.S.C. 326 or 23 U.S.C. 327 and the Project is within the scope of the assumed responsibilities, the State; and

(2) for all other cases, the FHWA.

(b) Except as authorized under section 27.3(c), the Recipient shall not begin final design; acquire real property, construction materials, or equipment; begin construction; or take other actions that represent an irretrievable commitment of resources for the Project unless and until:

(1) the Environmental Review Entity complies with the National Environmental Policy Act, 42 U.S.C. 4321 to 4370m-12, and any other applicable environmental laws and regulations; and

(2) if the Environmental Review Entity is not the Recipient, the Environmental Review Entity provides the Recipient with written notice that the environmental review process is complete.

(c) If the Recipient is using procedures for early acquisition of real property under 23 C.F.R. 710.501 or hardship and protective acquisitions of real property 23 C.F.R. 710.503, the Recipient shall comply with 23 C.F.R. 771.113(d)(1).

(d) The Recipient acknowledges that:

(1) the Environmental Review Entity's actions under section 27.3(a) depend on the Recipient conducting necessary environmental analyses and submitting necessary documents to the Environmental Review Entity; and

(2) applicable environmental statutes and regulation may require the Recipient to prepare and submit documents to other Federal, State, and local agencies.

(e) Consistent with 23 C.F.R. 771.105(a), to the extent practicable and consistent with Federal law, the Recipient shall coordinate all environmental investigations, reviews, and consultations as a single process.

(f) The activities described in this agreement may inform environmental decision-making processes, but the parties do not intend this agreement to document the alternatives under consideration under those processes. If a build alternative is selected that does not align information in this agreement, then:

(1) the parties may amend this agreement under section 21.1 for consistency with the selected build alternative; or

(2) if the USDOT determines that the condition at section 16.1(a)(5) is satisfied, the USDOT may terminate this agreement under section 16.1(a)(5).

(g) The Recipient shall complete any mitigation activities described in the environmental document or documents for the Project, including the terms and conditions contained in the required permits and authorizations for the Project.

27.4 Railroad Coordination. If the agreement includes one or more milestones identified as a "Railroad Coordination Agreement," then for each of those milestones, the Recipient shall enter a standard written railroad coordination agreement, consistent with 23 C.F.R. 646.216(d), no later than the deadline date identified for that milestone, with the identified railroad for work and operation within that railroad's right-of-way.

27.5 Relocation and Real Property Acquisition.

(a) The Recipient shall comply with the land acquisition policies in 49 C.F.R. part 24 subpart B and shall pay or reimburse property owners for necessary expenses as specified in that subpart.

(b) The Recipient shall provide a relocation assistance program offering the services described in 49 C.F.R. part 24 subpart C and shall provide reasonable relocation payments and assistance to displaced persons as required in 49 C.F.R. part 24 subparts D–E.

(c) The Recipient shall make available to displaced persons, within a reasonable period of time prior to displacement, comparable replacement dwellings in accordance with 49 C.F.R. part 24 subpart E.

27.6 Equipment Disposition.

(a) In accordance with 2 C.F.R. 200.313 and 1201.313, if the Recipient or a subrecipient acquires equipment under this award, then when that equipment is no longer needed for the Project that entity shall request disposition instructions from the FHWA.

(b) In accordance with 2 C.F.R. 200.443(d), the distribution of the proceeds from the disposition of equipment must be made in accordance with 2 C.F.R. 200.313–200.316 and 2 C.F.R. 1201.313.

(c) The Recipient shall ensure compliance with this section 27.6 for all tiers of subawards under this award.

ARTICLE 28
MANDATORY AWARD INFORMATION

28.1 Information Contained in a Federal Award. For 2 C.F.R. 200.211:

(1) the "Federal Award Date" is the date of this agreement, as defined under section 30.2;

(2) the "Assistance Listings Number" is 20.939 and the "Assistance Listings Title" is "Safe Streets and Roads for All Grant Program"; and

(3) this award is not for research and development.

ARTICLE 29
CONSTRUCTION AND DEFINITIONS

29.1 Attachments. This agreement includes the following attachments as integral parts:

Attachment A	Performance Measurement Information
Attachment B	Changes from Application
Attachment C	Racial Equity and Barriers to Opportunity
Attachment D	Climate Change and Environmental Justice Impacts
Attachment E	Labor and Workforce
Attachment F	Critical Infrastructure Security and Resilience

29.2 Exhibits. The following exhibits, which are in the document titled "Exhibits to FHWA Grant Agreements Under the Fiscal Year 2022 SS4A Grant Program", dated February 8, 2023, and available at [URL to be inserted when posted online], are part of this agreement.

Exhibit A	Applicable Federal Laws and Regulations
Exhibit B	Additional Standard Terms
Exhibit C	Quarterly Project Progress Reports and Recertifications: Format and Content
Exhibit D	Form for Subsequent Obligation of Funds

29.3 Construction. If a provision in the exhibits or the attachments conflicts with a provision in articles 1–30, then the provision in articles 1–30 prevails. If a provision in the attachments conflicts with a provision in the exhibits, then the provision in the attachments prevails.

29.4 Integration. This agreement constitutes the entire agreement of the parties relating to the SS4A grant program and awards under that program and supersedes any previous agreements, oral or written, relating to the SS4A grant program and awards under that program.

29.5 Definitions. In this agreement, the following definitions apply:

"**Program Statute**" means the BIL section 24112 and statutory text under the heading "Safe Streets and Roads for All Grants" in title I of division J of the Infrastructure Investment and Jobs Act, Pub. L. No. 117-58 (November 15, 2021), and all other provisions of that act that apply to amounts appropriated under that heading.

"**Project**" means the project proposed in the Grant Application, as modified by the negotiated provisions of this agreement, including article 3 and Attachments A–D.

"**SS4A Grant**" means an award of funds that were made available under the NOFO.

"**Grant Application**" means the application identified in section 2.1, including Standard Form 424 and all information and attachments submitted with that form through Grants.gov.

ARTICLE 30
AGREEMENT EXECUTION AND EFFECTIVE DATE

30.1 **Counterparts.** This agreement may be executed in counterparts, which constitute one document. The parties intend each countersigned original to have identical legal effect.

30.2 **Effective Date.** The agreement will become effective when all parties have signed it. The date of this agreement will be the date this agreement is signed by the last party to sign it. This instrument constitutes a SS4A Grant when the USDOT's authorized representative signs it.

U.S. DEPARTMENT OF TRANSPORTATION

EXHIBITS TO FHWA GRANT AGREEMENTS UNDER THE FISCAL YEAR 2022 SAFE STREETS AND ROADS FOR ALL GRANT PROGRAM

February 8, 2023

EXHIBIT A
APPLICABLE FEDERAL LAWS AND REGULATIONS

By entering into this agreement for a FY 2022 Safe Streets and Roads for All Grant, the Recipient assures and certifies, with respect to this Grant, that it will comply with all applicable Federal laws, regulations, executive orders, policies, guidelines, and requirements as they relate to the application, acceptance, and use of Federal funds for this Project. Performance under this agreement shall be governed by and in compliance with the following requirements, as applicable, to the type of organization of the Recipient and any applicable sub-recipients. The applicable provisions to this agreement include, but are not limited to, the following:

General Federal Legislation

a. Federal Fair Labor Standards Act – 29 U.S.C. 201, et seq.
b. Hatch Act – 5 U.S.C. 1501, et seq.
c. Uniform Relocation Assistance and Real Property Acquisition Policies Act of 1970 – 42 U.S.C. 4601, et seq.
d. National Historic Preservation Act of 1966 - Section 106 – 54 U.S.C. 306108
e. Archeological and Historic Preservation Act of 1974 – 54 U.S.C. 312501, et seq.
f. Native American Graves Protection and Repatriation Act – 25 U.S.C. 3001, et seq.
g. Clean Air Act, P.L. 90-148, as amended – 42 U.S.C. 7401, et seq.
h. Section 404 of the Clean Water Act, as amended – 33 U.S.C. 1344
i. Section 7 of the Endangered Species Act, P.L. 93-205, as amended – 16 U.S.C. 1536
j. Coastal Zone Management Act, P.L. 92-583, as amended – 16 U.S.C. 1451, et seq.
k. Flood Disaster Protection Act of 1973 - Section 102(a) – 42 U.S.C. 4012a
l. Age Discrimination Act of 1975 – 42 U.S.C. 6101, et seq.
m. American Indian Religious Freedom Act, P.L. 95-341, as amended
n. Drug Abuse Office and Treatment Act of 1972, as amended – 21 U.S.C. 1101, et seq.
o. The Comprehensive Alcohol Abuse and Alcoholism Prevention, Treatment and Rehabilitation Act of 1970, P.L. 91-616, as amended – 42 U.S.C. 4541, et seq.
p. Sections 523 and 527 of the Public Health Service Act of 1912, as amended – 42 U.S.C. 290dd through 290dd-2
q. Architectural Barriers Act of 1968 – 42 U.S.C. 4151, et seq.
r. Power Plant and Industrial Fuel Use Act of 1978, P.L. 100-42 - Section 403 – 42 U.S.C. 8373
s. Contract Work Hours and Safety Standards Act – 40 U.S.C. 3701, et seq.
t. Copeland Anti-kickback Act, as amended – 18 U.S.C. 874 and 40 U.S.C. 3145
u. National Environmental Policy Act of 1969 – 42 U.S.C. 4321, et seq.
v. Wild and Scenic Rivers Act, P.L. 90-542, as amended – 16 U.S.C. 1271, et seq.
w. Federal Water Pollution Control Act, as amended – 33 U.S.C. 1251-1376
x. Single Audit Act of 1984 – 31 U.S.C. 7501, et seq.
y. Americans with Disabilities Act of 1990 – 42 U.S.C. 12101, et seq.
z. Title IX of the Education Amendments of 1972, as amended – 20 U.S.C. 1681 through 1683 and 1685 through 1687
aa. Section 504 of the Rehabilitation Act of 1973, as amended – 29 U.S.C. 794
bb. Title VI of the Civil Rights Act of 1964 – 42 U.S.C. 2000d, et seq.
cc. Title IX of the Federal Property and Administrative Services Act of 1949 – 40 U.S.C.

1101 -1104, 541, et seq.

dd. Limitation on Use of Appropriated Funds to Influence Certain Federal Contracting and Financial Transactions – 31 U.S.C. 1352
ee. Freedom of Information Act – 5 U.S.C. 552, as amended
ff. Magnuson-Stevens Fishery Conservation and Management Act – 16 U.S.C. 1855
gg. Farmland Protection Policy Act of 1981 – 7 U.S.C. 4201, et seq.
hh. Noise Control Act of 1972 – 42 U.S.C. 4901, et seq.
ii. Fish and Wildlife Coordination Act of 1956 – 16 U.S.C. 661, et seq.
jj. Section 9 of the Rivers and Harbors Act and the General Bridge Act of 1946 – 33 U.S.C. 401 and 525
kk. Section 4(f) of the Department of Transportation Act of 1966 – 49 U.S.C. 303
ll. Comprehensive Environmental Response, Compensation, and Liability Act of 1980 (CERCLA), as amended – 42 U.S.C. 9601, et seq.
mm. Safe Drinking Water Act – 42 U.S.C. 300f to 300j-26
nn. Wilderness Act – 16 U.S.C. 1131-1136
oo. Solid Waste Disposal Act, as amended by the Resource Conservation and Recovery Act of 1976 – 42 U.S.C. 6901, et seq.
pp. Migratory Bird Treaty Act – 16 U.S.C. 703, et seq.
qq. The Federal Funding Transparency and Accountability Act of 2006, as amended (Pub. L. 109–282, as amended by section 6202 of Public Law 110–252)
rr. Cargo Preference Act of 1954 – 46 U.S.C. 55305
ss. Section 889 of the John D. McCain National Defense Authorization Act for Fiscal Year 2019, Pub. L. 115-232

Executive Orders

a. Executive Order 11246 – Equal Employment Opportunity
b. Executive Order 11990 – Protection of Wetlands
c. Executive Order 11988 – Floodplain Management
d. Executive Order 12372 – Intergovernmental Review of Federal Programs
e. Executive Order 12549 – Debarment and Suspension
f. Executive Order 12898 – Federal Actions to Address Environmental Justice in Minority Populations and Low-Income Populations
g. Executive Order 13166 – Improving Access to Services for Persons With Limited English Proficiency
h. Executive Order 13985 – Advancing Racial Equity and Support for Underserved Communities Through the Federal Government
i. Executive Order 14005 – Ensuring the Future is Made in All of America by All of America's Workers
j. Executive Order 14008 – Tackling the Climate Crisis at Home and Abroad

General Federal Regulations

a. Uniform Administrative Requirements, Cost Principles, and Audit Requirements for Federal Awards – 2 C.F.R. Parts 200, 1201
b. Non-procurement Suspension and Debarment – 2 C.F.R. Parts 180, 1200
c. Investigative and Enforcement Procedures – 14 C.F.R. Part 13
d. Procedures for predetermination of wage rates – 29 C.F.R. Part 1

e. Contractors and subcontractors on public building or public work financed in whole or part by loans or grants from the United States – 29 C.F.R. Part 3
f. Labor standards provisions applicable to contracts governing federally financed and assisted construction (also labor standards provisions applicable to non-construction contracts subject to the Contract Work Hours and Safety Standards Act) – 29 C.F.R. Part 5
g. Office of Federal Contract Compliance Programs, Equal Employment Opportunity, Department of Labor (Federal and federally assisted contracting requirements) – 41 C.F.R. Parts 60, et seq.
h. New Restrictions on Lobbying – 49 C.F.R. Part 20
i. Nondiscrimination in Federally Assisted Programs of the Department of Transportation – Effectuation of Title VI of the Civil Rights Act of 1964 – 49 C.F.R. Part 21
j. Uniform relocation assistance and real property acquisition for Federal and Federally assisted programs – 49 C.F.R. Part 24
k. Nondiscrimination on the Basis of Sex in Education Programs or Activities Receiving Federal Financial Assistance – 49 C.F.R. Part 25
l. Nondiscrimination on the Basis of Handicap in Programs and Activities Receiving or Benefiting from Federal Financial Assistance – 49 C.F.R. Part 27
m. DOT's implementation of DOJ's ADA Title II regulations compliance procedures for all programs, services, and regulatory activities relating to transportation under 28 C.F.R. Part 35
n. Enforcement of Nondiscrimination on the Basis of Handicap in Programs or Activities Conducted by the Department of Transportation – 49 C.F.R. Part 28
o. Denial of public works contracts to suppliers of goods and services of countries that deny procurement market access to U.S. contractors – 49 C.F.R. Part 30
p. Governmentwide Requirements for Drug-Free Workplace (Financial Assistance) – 49 C.F.R. Part 32
q. DOT's implementing ADA regulations for transit services and transit vehicles, including the DOT's standards for accessible transportation facilities in Part 37, Appendix A – 49 C.F.R. Parts 37 and 38
r. Participation by Disadvantaged Business Enterprises in Department of Transportation Financial Assistance Programs – 49 C.F.R. Part 26 (as applicable under section 18.3 of this agreement)

Office of Management and Budget Circulars

a. Any applicable OMB Circular based upon the specific FY 2022 Safe Streets and Roads for All Grant Recipient.

Highway Federal Legislation

a. Agreements relating to the use of an access to rights-of-way—Interstate System, 23 U.S.C. 111
b. Planning, 23 U.S.C. 134 and 135 (except for projects that are not regionally significant that do not receive funding under Title 23 or Chapter 53 of Title 49)
c. Tolls, 23 U.S.C. 301 (to the extent the recipient wishes to toll an existing free facility that has received Title 23 funds in the past); except as authorized by 23 U.S.C. 129 and 166.
d. Efficient Environmental Reviews - 23 U.S.C. 139

e. Policy on lands, wildlife and waterfowl refuges, and historic sites - 49 U.S.C. 303

Federal Highway Regulations

a. Planning – 23 C.F.R. Part 450 (except for projects that are not regionally significant that do not receive funding under Title 23 or Chapter 53 of Title 49)
b. National Highway System Design Standards – 23 C.F.R. Part 625
c. Location and Hydraulic Design of Encroachments on Flood Plains – 23 C.F.R. Part 650 Subpart A
d. Manual on Uniform Traffic Control Devices – 23 C.F.R. Part 655
e. Length, Width and Weight Limitations – 23 C.F.R. Part 658
f. Environmental Impact and Related Procedures – 23 C.F.R. Part 771
g. Parks, Recreation Areas, Wildlife and Waterfowl Refuges, and Historic Sites (Section 4(f)) – 23 C.F.R. Part 774
h. Permitting Requirements under the National Pollutant Discharge Elimination System – 40 C.F.R. Part 122

Specific assurances required to be included in the FY 2022 Safe Streets and Roads for All Grant agreement by any of the above laws, regulations, or circulars are hereby incorporated by reference into this agreement.

EXHIBIT B
ADDITIONAL STANDARD TERMS

TERM B.1
TITLE VI ASSURANCE
(Implementing Title VI of the Civil Rights Act of 1964, as amended)

ASSURANCE CONCERNING NONDISCRIMINATION IN FEDERALLY-ASSISTED PROGRAMS AND ACTIVITIES RECEIVING OR BENEFITING FROM FEDERAL FINANCIAL ASSISTANCE

(Implementing the Rehabilitation Act of 1973, as amended, and the Americans With Disabilities Act, as amended)

49 C.F.R. Parts 21, 25, 27, 37 and 38

The United States Department of Transportation (USDOT)

Standard Title VI/Non-Discrimination Assurances

DOT Order No. 1050.2A

By signing and submitting the Technical Application and by entering into this agreement under the FY 2022 Safe Streets and Roads for All (SS4A) grant program, the Recipient **HEREBY AGREES THAT**, as a condition to receiving any Federal financial assistance from the U.S. Department of Transportation (DOT), through the Federal Highway Administration (FHWA), it is subject to and will comply with the following:

Statutory/Regulatory Authorities

- Title VI of the Civil Rights Act of 1964 (42 U.S.C. § 2000d *et seq.*, 78 stat. 252), (prohibits discrimination on the basis of race, color, national origin);
- 49 C.F.R. Part 21 (entitled *Non-discrimination In Federally-Assisted Programs Of The Department Of Transportation—Effectuation Of Title VI Of The Civil Rights Act Of 1964*);
- 28 C.F.R. section 50.3 (U.S. Department of Justice Guidelines for Enforcement of Title VI of the Civil Rights Act of 1964);

The preceding statutory and regulatory cites hereinafter are referred to as the "Acts" and "Regulations," respectively.

General Assurances

In accordance with the Acts, the Regulations, and other pertinent directives, circulars, policy, memoranda, and/or guidance, the Recipient hereby gives assurance that it will promptly take any measures necessary to ensure that:

"No person in the United States shall, on the grounds of race, color, or national origin, be excluded from participation in, be denied the benefits of, or be otherwise subjected to discrimination under any program or activity," for which the Recipient receives Federal financial assistance from DOT, including the FHWA.

The Civil Rights Restoration Act of 1987 clarified the original intent of Congress, with respect to Title VI and other Non-discrimination requirements (The Age Discrimination Act of 1975, and Section 504 of the Rehabilitation Act of 1973), by restoring the broad, institutional-wide scope and coverage of these non-discrimination statutes and requirements to include all programs and activities of the Recipient, so long as any portion of the program is Federally assisted.

Specific Assurances

More specifically, and without limiting the above general Assurance, the Recipient agrees with and gives the following Assurances with respect to its Federally assisted FY 2022 SS4A grant program:

1. The Recipient agrees that each "activity," "facility," or "program," as defined in §§ 21.23 (b) and 21.23 (e) of 49 C.F.R. § 21 will be (with regard to an "activity") facilitated, or will be (with regard to a "facility") operated, or will be (with regard to a "program") conducted in compliance with all requirements imposed by, or pursuant to the Acts and the Regulations.

2. The Recipient will insert the following notification in all solicitations for bids, Requests For Proposals for work, or material subject to the Acts and the Regulations made in connection with the FY 2022 SS4A Grant and, in adapted form, in all proposals for negotiated agreements regardless of funding source:

   "The Recipient, in accordance with the provisions of Title VI of the Civil Rights Act of 1964 (78 Stat. 252, 42 U.S.C. §§ 2000d to 2000d-4) and the Regulations, hereby notifies all bidders that it will affirmatively ensure that for any contract entered into pursuant to this advertisement, disadvantaged business enterprises will be afforded full and fair opportunity to submit bids in response to this invitation and will not be discriminated against on the grounds of race, color, or national origin in consideration for an award."

3. The Recipient will insert the clauses of Appendix A and E of this Assurance in every contract or agreement subject to the Acts and the Regulations.

4. The Recipient will insert the clauses of Appendix B of this Assurance, as a covenant running with the land, in any deed from the United States effecting or recording a transfer of real property, structures, use, or improvements thereon or interest therein to a Recipient.

5. That where the Recipient receives Federal financial assistance to construct a facility, or part of a facility, the Assurance will extend to the entire facility and facilities operated in connection therewith.

6. That where the Recipient receives Federal financial assistance in the form, or for the acquisition of real property or an interest in real property, the Assurance will extend to rights to space on, over, or under such property.

7. That the Recipient will include the clauses set forth in Appendix C and Appendix D of this Assurance, as a covenant running with the land, in any future deeds, leases, licenses, permits, or similar instruments entered into by the Recipient with other parties:

    a. for the subsequent transfer of real property acquired or improved under the applicable activity, project, or program; and
    b. for the construction or use of, or access to, space on, over, or under real property acquired or improved under the applicable activity, project, or program.

8. That this Assurance obligates the Recipient for the period during which Federal financial assistance is extended to the program, except where the Federal financial assistance is to provide, or is in the form of, personal property, or real property, or interest therein, or structures or improvements thereon, in which case the Assurance obligates the Recipient, or any transferee for the longer of the following periods:

    a. the period during which the property is used for a purpose for which the Federal financial assistance is extended, or for another purpose involving the provision of similar services or benefits; or
    b. the period during which the Recipient retains ownership or possession of the property.

9. The Recipient will provide for such methods of administration for the program as are found by the Secretary of Transportation or the official to whom he/she delegates specific authority to give reasonable guarantee that it, other recipients, sub-recipients, contractors, subcontractors, consultants, transferees, successors in interest, and other participants of Federal financial assistance under such program will comply with all requirements imposed or pursuant to the Acts, the Regulations, and this Assurance.

10. The Recipient agrees that the United States has a right to seek judicial enforcement with regard to any matter arising under the Acts, the Regulations, and this Assurance.

By signing this ASSURANCE, the Recipient also agrees to comply (and require any sub-recipients, contractors, successors, transferees, and/or assignees to comply) with all applicable provisions governing the FHWA's access to records, accounts, documents, information, facilities, and staff. You also recognize that you must comply with any program or compliance reviews, and/or complaint investigations conducted by the FHWA. You must keep records, reports, and submit the material for review upon request to FHWA, or its designee in a timely,

complete, and accurate way. Additionally, you must comply with all other reporting, data collection, and evaluation requirements, as prescribed by law or detailed in program guidance.

The Recipient gives this ASSURANCE in consideration of and for obtaining any Federal grants, loans, contracts, agreements, property, and/or discounts, or other Federal-aid and Federal financial assistance extended after the date hereof to the recipients by the U.S. Department of Transportation under the FY 2022 SS4A grant program. This ASSURANCE is binding on the Recipient, other recipients, sub-recipients, contractors, subcontractors and their subcontractors', transferees, successors in interest, and any other participants in the FY 2022 SS4A grant program.

APPENDIX A

During the performance of this contract, the contractor, for itself, its assignees, and successors in interest (hereinafter referred to as the "contractor") agrees as follows:

1. **Compliance with Regulations:** The contractor (hereinafter includes consultants) will comply with the Acts and the Regulations relative to Non-discrimination in Federally-assisted programs of the U.S. Department of Transportation, Federal Highway Administration (FHWA), as they may be amended from time to time, which are herein incorporated by reference and made a part of this contract.

2. **Non-discrimination:** The contractor, with regard to the work performed by it during the contract, will not discriminate on the grounds of race, color, or national origin in the selection and retention of subcontractors, including procurements of materials and leases of equipment. The contractor will not participate directly or indirectly in the discrimination prohibited by the Acts and the Regulations, including employment practices when the contract covers any activity, project, or program set forth in Appendix B of 49 C.F.R. Part 21.

3. **Solicitations for Subcontracts, Including Procurements of Materials and Equipment:** In all solicitations, either by competitive bidding, or negotiation made by the contractor for work to be performed under a subcontract, including procurements of materials, or leases of equipment, each potential subcontractor or supplier will be notified by the contractor of the contractor's obligations under this contract and the Acts and the Regulations relative to Non-discrimination on the grounds of race, color, or national origin.

4. **Information and Reports:** The contractor will provide all information and reports required by the Acts, the Regulations, and directives issued pursuant thereto and will permit access to its books, records, accounts, other sources of information, and its facilities as may be determined by the Recipient or the FHWA to be pertinent to ascertain compliance with such Acts, Regulations, and instructions. Where any information required of a contractor is in the exclusive possession of another who fails or refuses to furnish the information, the contractor will so certify to the Recipient or the FHWA, as appropriate, and will set forth what efforts it has made to obtain the information.

5. **Sanctions for Noncompliance:** In the event of a contractor's noncompliance with the Non-discrimination provisions of this contract, the Recipient will impose such contract sanctions as it or the FHWA may determine to be appropriate, including, but not limited to:

   a. withholding payments to the contractor under the contract until the contractor complies; and/or
   b. cancelling, terminating, or suspending a contract, in whole or in part.

6. **Incorporation of Provisions:** The contractor will include the provisions of paragraphs one through six in every subcontract, including procurements of materials and leases of equipment, unless exempt by the Acts, the Regulations and directives issued pursuant

thereto. The contractor will take action with respect to any subcontract or procurement as the Recipient or the FHWA may direct as a means of enforcing such provisions including sanctions for noncompliance. Provided, that if the contractor becomes involved in, or is threatened with litigation by a subcontractor, or supplier because of such direction, the contractor may request the Recipient to enter into any litigation to protect the interests of the Recipient. In addition, the contractor may request the United States to enter into the litigation to protect the interests of the United States.

APPENDIX B

CLAUSES FOR DEEDS TRANSFERRING UNITED STATES PROPERTY

The following clauses will be included in deeds effecting or recording the transfer of real property, structures, or improvements thereon, or granting interest therein from the United States pursuant to the provisions of Specific Assurance 4:

NOW, THEREFORE, the U.S. Department of Transportation as authorized by law and upon the condition that the Recipient will accept title to the lands and maintain the project constructed thereon in accordance with the Infrastructure Investment and Jobs Act, Pub. L. No. 117-58 (Nov. 15, 2021), the Consolidated Appropriations Act, 2022, Pub. L. No. 117-103 (Mar. 15, 2022), 49 U.S.C. § 6702, the Regulations for the Administration of FY 2022 SS4A grant program, and the policies and procedures prescribed by the Federal Highway Administration (FHWA) of the U.S. Department of Transportation in accordance and in compliance with all requirements imposed by Title 49, Code of Federal Regulations, U.S. Department of Transportation, Subtitle A, Office of the Secretary, Part 21, Non-discrimination in Federally-assisted programs of the U.S. Department of Transportation pertaining to and effectuating the provisions of Title VI of the Civil Rights Act of 1964 (78 Stat. 252; 42 U.S.C. § 2000d to 2000d-4), does hereby remise, release, quitclaim and convey unto the Recipient all the right, title and interest of the U.S. Department of Transportation in and to said lands described in Exhibit A attached hereto and made a part hereof.

(HABENDUM CLAUSE)

TO HAVE AND TO HOLD said lands and interests therein unto Recipient and its successors forever, subject, however, to the covenants, conditions, restrictions and reservations herein contained as follows, which will remain in effect for the period during which the real property or structures are used for a purpose for which Federal financial assistance is extended or for another purpose involving the provision of similar services or benefits and will be binding on the Recipient, its successors and assigns.

The Recipient, in consideration of the conveyance of said lands and interests in lands, does hereby covenant and agree as a covenant running with the land for itself, its successors and assigns, that (1) no person will on the grounds of race, color, or national origin, be excluded from participation in, be denied the benefits of, or be otherwise subjected to discrimination with regard to any facility located wholly or in part on, over, or under such lands hereby conveyed [,] [and]* (2) that the Recipient will use the lands and interests in lands and interests in lands so conveyed, in compliance with all requirements imposed by or pursuant to Title 49, Code of Federal Regulations, U.S. Department of Transportation, Subtitle A, Office of the Secretary, Part 21, Non-discrimination in Federally-assisted programs of the U.S. Department of Transportation, Effectuation of Title VI of the Civil Rights Act of 1964, and as said Regulations and Acts may be amended[, and (3) that in the event of breach of any of the above-mentioned non-discrimination conditions, the Department will have a right to enter or re-enter said lands and facilities on said land, and that above described land and facilities will thereon revert to and vest in and become the absolute property of the U.S. Department of Transportation and its assigns as such interest existed prior to this instruction].*

(*Reverter clause and related language to be used only when it is determined that such a clause is necessary in order to make clear the purpose of Title VI.)

APPENDIX C

CLAUSES FOR TRANSFER OF REAL PROPERTY ACQUIRED OR IMPROVED UNDER THE ACTIVITY, FACILITY, OR PROGRAM

The following clauses will be included in deeds, licenses, leases, permits, or similar instruments entered into by the Recipient pursuant to the provisions of Specific Assurance 7(a):

A. The (Recipient, lessee, permittee, etc. as appropriate) for himself/herself, his/her heirs, personal representatives, successors in interest, and assigns, as a part of the consideration hereof, does hereby covenant and agree [in the case of deeds and leases add "as a covenant running with the land"] that:

   1. In the event facilities are constructed, maintained, or otherwise operated on the property described in this (deed, license, lease, permit, etc.) for a purpose for which a U.S. Department of Transportation activity, facility, or program is extended or for another purpose involving the provision of similar services or benefits, the (Recipient, licensee, lessee, permittee, etc.) will maintain and operate such facilities and services in compliance with all requirements imposed by the Acts and Regulations (as may be amended) such that no person on the grounds of race, color, or national origin, will be excluded from participation in, denied the benefits of, or be otherwise subjected to discrimination in the use of said facilities.

B. With respect to licenses, leases, permits, etc., in the event of breach of any of the above Non-discrimination covenants, Recipient will have the right to terminate the (lease, license, permit, etc.) and to enter, re-enter, and repossess said lands and facilities thereon, and hold the same as if the (lease, license, permit, etc.) had never been made or issued.*

C. With respect to a deed, in the event of breach of any of the above Non-discrimination covenants, the Recipient will have the right to enter or re-enter the lands and facilities thereon, and the above described lands and facilities will there upon revert to and vest in and become the absolute property of the Recipient and its assigns.*

(*Reverter clause and related language to be used only when it is determined that such a clause is necessary to make clear the purpose of Title VI.)

APPENDIX D

CLAUSES FOR CONSTRUCTION/USE/ACCESS TO REAL PROPERTY ACQUIRED UNDER THE ACTIVITY, FACILITY OR PROGRAM

The following clauses will be included in deeds, licenses, permits, or similar instruments/agreements entered into by Recipient pursuant to the provisions of Specific Assurance 7(b):

A. The (Recipient, licensee, permittee, etc., as appropriate) for himself/herself, his/her heirs, personal representatives, successors in interest, and assigns, as a part of the consideration hereof, does hereby covenant and agree (in the case of deeds and leases add, "as a covenant running with the land") that (1) no person on the ground of race, color, or national origin, will be excluded from participation in, denied the benefits of, or be otherwise subjected to discrimination in the use of said facilities, (2) that in the construction of any improvements on, over, or under such land, and the furnishing of services thereon, no person on the ground of race, color, or national origin, will be excluded from participation in, denied the benefits of, or otherwise be subjected to discrimination, (3) that the (Recipient, licensee, lessee, permittee, etc.) will use the premises in compliance with all other requirements imposed by or pursuant to the Acts and Regulations, as amended, set forth in this Assurance.

B. With respect to (licenses, leases, permits, etc.), in the event of breach of any of the above Non-discrimination covenants, Recipient will have the right to terminate the (license, permit, etc., as appropriate) and to enter or re-enter and repossess said land and the facilities thereon, and hold the same as if said (license, permit, etc., as appropriate) had never been made or issued.*

C. With respect to deeds, in the event of breach of any of the above Non-discrimination covenants, Recipient will there upon revert to and vest in and become the absolute property of Recipient and its assigns.*

(*Reverter clause and related language to be used only when it is determined that such a clause is necessary to make clear the purpose of Title VI.)

APPENDIX E

During the performance of this contract, the contractor, for itself, its assignees, and successors in interest (hereinafter referred to as the "contractor") agrees to comply with the following non-discrimination statutes and authorities; including but not limited to:

Pertinent Non-Discrimination Authorities:

- Title VI of the Civil Rights Act of 1964 (42 U.S.C. § 2000d *et seq.*, 78 stat. 252), (prohibits discrimination on the basis of race, color, national origin); and 49 C.F.R. Part 21.
- The Uniform Relocation Assistance and Real Property Acquisition Policies Act of 1970, (42 U.S.C. § 4601), (prohibits unfair treatment of persons displaced or whose property has been acquired because of Federal or Federal-aid programs and projects);
- Section 504 of the Rehabilitation Act of 1973, (29 U.S.C. § 794 *et seq.*), as amended, (prohibits discrimination on the basis of disability); and 49 C.F.R. Part 27;
- The Age Discrimination Act of 1975, as amended, (42 U.S.C. § 6101 *et seq.*), (prohibits discrimination on the basis of age);
- Airport and Airway Improvement Act of 1982, (49 U.S.C. § 471, Section 47123), as amended, (prohibits discrimination based on race, creed, color, national origin, or sex);
- The Civil Rights Restoration Act of 1987, (PL 100-209), (Broadened the scope, coverage and applicability of Title VI of the Civil Rights Act of 1964, The Age Discrimination Act of 1975 and Section 504 of the Rehabilitation Act of 1973, by expanding the definition of the terms "programs or activities" to include all of the programs or activities of the Federal-aid recipients, sub-recipients and contractors, whether such programs or activities are Federally funded or not);
- Titles II and III of the Americans with Disabilities Act, which prohibit discrimination on the basis of disability in the operation of public entities, public and private transportation systems, places of public accommodation, and certain testing entities (42 U.S.C. §§ 12131 – 12189) as implemented by Department of Transportation regulations at 49 C.F.R. Parts 37 and 38;
- The Federal Aviation Administration's Non-discrimination statute (49 U.S.C. § 47123) (prohibits discrimination on the basis of race, color, national origin, and sex);
- Executive Order 12898, Federal Actions to Address Environmental Justice in Minority Populations and Low-Income Populations, which ensures nondiscrimination against minority populations by discouraging programs, policies, and activities with disproportionately high and adverse human health or environmental effects on minority and low-income populations;
- Executive Order 13166, Improving Access to Services for Persons with Limited English Proficiency, and resulting agency guidance, national origin discrimination includes discrimination because of limited English proficiency (LEP). To ensure compliance with Title VI, you must take reasonable steps to ensure that LEP persons have meaningful access to your programs (70 Fed. Reg. at 74087 to 74100);
- Title IX of the Education Amendments of 1972, as amended, which prohibits you from discriminating because of sex in education programs or activities (20 U.S.C. § 1681 et seq).

TERM B.2
CERTIFICATION REGARDING DEBARMENT, SUSPENSION, AND OTHER RESPONSIBILITY MATTERS -- PRIMARY COVERED TRANSACTIONS

2 C.F.R. Parts 180 and 1200

These assurances and certifications are applicable to all Federal-aid construction contracts, design-build contracts, subcontracts, lower-tier subcontracts, purchase orders, lease agreements, consultant contracts or any other covered transaction requiring FHWA approval or that is estimated to cost $25,000 or more – as defined in 2 C.F.R. Parts 180 and 1200.

By signing and submitting the Technical Application and by entering into this agreement under the FY 2022 SS4A grant program, the Recipient is providing the assurances and certifications for First Tier Participants and Lower Tier Participants in the FY 2022 SS4A Grant, as set out below.

1. Instructions for Certification – First Tier Participants:

a. The prospective first tier participant is providing the certification set out below.

b. The inability of a person to provide the certification set out below will not necessarily result in denial of participation in this covered transaction. The prospective first tier participant shall submit an explanation of why it cannot provide the certification set out below. The certification or explanation will be considered in connection with the department or agency's determination whether to enter into this transaction. However, failure of the prospective first tier participant to furnish a certification or an explanation shall disqualify such a person from participation in this transaction.

c. The certification in this clause is a material representation of fact upon which reliance was placed when the contracting agency determined to enter into this transaction. If it is later determined that the prospective participant knowingly rendered an erroneous certification, in addition to other remedies available to the Federal Government, the contracting agency may terminate this transaction for cause of default.

d. The prospective first tier participant shall provide immediate written notice to the contracting agency to whom this proposal is submitted if any time the prospective first tier participant learns that its certification was erroneous when submitted or has become erroneous by reason of changed circumstances.

e. The terms "covered transaction," "civil judgment," "debarred," "suspended," "ineligible," "participant," "person," "principal," and "voluntarily excluded," as used in this clause, are defined in 2 C.F.R. Parts 180 and 1200. "First Tier Covered Transactions" refers to any covered transaction between a Recipient or subrecipient of Federal funds and a participant (such as the prime or general contract). "Lower Tier Covered Transactions" refers to any covered transaction under a First Tier Covered Transaction (such as subcontracts). "First Tier Participant" refers to the participant who has entered into a covered transaction with a Recipient or subrecipient of

Federal funds (such as the prime or general contractor). "Lower Tier Participant" refers to any participant who has entered into a covered transaction with a First Tier Participant or other Lower Tier Participants (such as subcontractors and suppliers).

f. The prospective first tier participant agrees by submitting this proposal that, should the proposed covered transaction be entered into, it shall not knowingly enter into any lower tier covered transaction with a person who is debarred, suspended, declared ineligible, or voluntarily excluded from participation in this covered transaction, unless authorized by the department or agency entering into this transaction.

g. The prospective first tier participant further agrees by submitting this proposal that it will include the clause titled "Certification Regarding Debarment, Suspension, Ineligibility and Voluntary Exclusion-Lower Tier Covered Transactions," provided by the department or contracting agency, entering into this covered transaction, without modification, in all lower tier covered transactions and in all solicitations for lower tier covered transactions exceeding the $25,000 threshold.

h. A participant in a covered transaction may rely upon a certification of a prospective participant in a lower tier covered transaction that is not debarred, suspended, ineligible, or voluntarily excluded from the covered transaction, unless it knows that the certification is erroneous. A participant is responsible for ensuring that its principals are not suspended, debarred, or otherwise ineligible to participate in covered transactions. To verify the eligibility of its principals, as well as the eligibility of any lower tier prospective participants, each participant may, but is not required to, check the System for Award Management website (https://www.sam.gov/), which is compiled by the General Services Administration.

i. Nothing contained in the foregoing shall be construed to require the establishment of a system of records in order to render in good faith the certification required by this clause. The knowledge and information of the prospective participant is not required to exceed that which is normally possessed by a prudent person in the ordinary course of business dealings.

j. Except for transactions authorized under paragraph (f) of these instructions, if a participant in a covered transaction knowingly enters into a lower tier covered transaction with a person who is suspended, debarred, ineligible, or voluntarily excluded from participation in this transaction, in addition to other remedies available to the Federal Government, the department or agency may terminate this transaction for cause or default.

Certification Regarding Debarment, Suspension, Ineligibility and Voluntary Exclusion – First Tier Participants:

a. The prospective first tier participant certifies to the best of its knowledge and belief, that it and its principals:

(1) Are not presently debarred, suspended, proposed for debarment, declared ineligible, or voluntarily excluded from participating in covered transactions by any Federal department or agency;

(2) Have not within a three-year period preceding this proposal been convicted of or had a civil judgment, including a civil settlement, rendered against them for commission of fraud or a criminal offense in connection with obtaining, attempting to obtain, or performing a public (Federal, State or local) transaction or contract under a public transaction; violation of Federal or State antitrust statutes or commission of embezzlement, theft, forgery, bribery, falsification or destruction of records, making false statements, or receiving stolen property;

(3) Are not presently indicted for or otherwise criminally or civilly charged by a governmental entity (Federal, State or local) with commission of any of the offenses enumerated in paragraph (a)(2) of this certification; and

(4) Have not within a three-year period preceding this application/proposal had one or more public transactions (Federal, State or local) terminated for cause or default.

b. Where the prospective participant is unable to certify to any of the statements in this certification, such prospective participant shall attach an explanation to this proposal.

2. Instructions for Certification - Lower Tier Participants:

(Applicable to all subcontracts, purchase orders and other lower tier transactions requiring prior FHWA approval or estimated to cost $25,000 or more - 2 C.F.R. Parts 180 and 1200)

a. The prospective lower tier participant is providing the certification set out below.

b. The certification in this clause is a material representation of fact upon which reliance was placed when this transaction was entered into. If it is later determined that the prospective lower tier participant knowingly rendered an erroneous certification, in addition to other remedies available to the Federal Government, the department, or agency with which this transaction originated may pursue available remedies, including suspension and/or debarment.

c. The prospective lower tier participant shall provide immediate written notice to the person to which this proposal is submitted if at any time the prospective lower tier participant learns that its certification was erroneous by reason of changed circumstances.

d. The terms "covered transaction," "civil settlement," "debarred," "suspended," "ineligible," "participant," "person," "principal," and "voluntarily excluded," as used in this clause, are defined in 2 C.F.R. Parts 180 and 1200. You may contact the person to which this proposal is submitted for assistance in obtaining a copy of those regulations. "First Tier Covered Transactions" refers to any covered transaction between a Recipient or subrecipient of Federal funds and a participant (such as the prime or general contract). "Lower Tier Covered Transactions" refers to any covered transaction under a First Tier Covered Transaction (such as subcontracts). "First Tier Participant" refers to the participant who has entered into a covered transaction with a Recipient or subrecipient of Federal funds (such as the prime or general contractor). "Lower Tier Participant" refers any participant who has entered into a covered

transaction with a First Tier Participant or other Lower Tier Participants (such as subcontractors and suppliers).

e. The prospective lower tier participant agrees by submitting this proposal that, should the proposed covered transaction be entered into, it shall not knowingly enter into any lower tier covered transaction with a person who is debarred, suspended, declared ineligible, or voluntarily excluded from participation in this covered transaction, unless authorized by the department or agency with which this transaction originated.

f. The prospective lower tier participant further agrees by submitting this proposal that it will include this clause titled "Certification Regarding Debarment, Suspension, Ineligibility and Voluntary Exclusion-Lower Tier Covered Transaction," without modification, in all lower tier covered transactions and in all solicitations for lower tier covered transactions exceeding the $25,000 threshold.

g. A participant in a covered transaction may rely upon a certification of a prospective participant in a lower tier covered transaction that is not debarred, suspended, ineligible, or voluntarily excluded from the covered transaction, unless it knows that the certification is erroneous. A participant is responsible for ensuring that its principals are not suspended, debarred, or otherwise ineligible to participate in covered transactions. To verify the eligibility of its principals, as well as the eligibility of any lower tier prospective participants, each participant may, but is not required to, check the System for Award Management website (https://www.sam.gov/), which is compiled by the General Services Administration.

h. Nothing contained in the foregoing shall be construed to require establishment of a system of records in order to render in good faith the certification required by this clause. The knowledge and information of participant is not required to exceed that which is normally possessed by a prudent person in the ordinary course of business dealings.

i. Except for transactions authorized under paragraph e of these instructions, if a participant in a covered transaction knowingly enters into a lower tier covered transaction with a person who is suspended, debarred, ineligible, or voluntarily excluded from participation in this transaction, in addition to other remedies available to the Federal Government, the department or agency with which this transaction originated may pursue available remedies, including suspension and/or debarment.

Certification Regarding Debarment, Suspension, Ineligibility and Voluntary Exclusion -- Lower Tier Participants:

1. The prospective lower tier participant certifies, by submission of this proposal, that neither it nor its principals is presently debarred, suspended, proposed for debarment, declared ineligible, or voluntarily excluded from participating in covered transactions by any Federal department or agency.

2. Where the prospective lower tier participant is unable to certify to any of the statements in this certification, such prospective participant shall attach an explanation to this proposal.

TERM B.3
REQUIREMENTS REGARDING DELINQUENT TAX LIABILITY OR A FELONY CONVICTION UNDER ANY FEDERAL LAW

As required by sections 744 and 745 of Title VII, Division E of the Consolidated Appropriations Act, 2023, Pub. L. No. 117-328 (Dec. 29, 2022), and implemented through USDOT Order 4200.6, the funds provided under this award shall not be used to enter into a contract, memorandum of understanding, or cooperative agreement with, make a grant to, or provide a loan or loan guarantee to, any corporation that:

(1) Has any unpaid Federal tax liability that has been assessed, for which all judicial and administrative remedies have been exhausted or have lapsed, and that is not being paid in a timely manner pursuant to an agreement with the authority responsible for collecting the tax liability, where the awarding agency is aware of the unpaid tax liability, unless a Federal agency has considered suspension or debarment of the corporation and made a determination that suspension or debarment is not necessary to protect the interests of the Government; or

(2) Was convicted of a felony criminal violation under any Federal law within the preceding 24 months, where the awarding agency is aware of the conviction, unless a Federal agency has considered suspension or debarment of the corporation and made a determination that suspension or debarment is not necessary to protect the interests of the Government.

The Recipient therefore agrees:

1. **Definitions.** For the purposes of this exhibit, the following definitions apply:

   "**Covered Transaction**" means a transaction that uses any funds under this award and that is a contract, memorandum of understanding, cooperative agreement, grant, loan, or loan guarantee.

   "**Felony Conviction**" means a conviction within the preceding 24 months of a felony criminal violation under any Federal law and includes conviction of an offense defined in a section of the United States Code that specifically classifies the offense as a felony and conviction of an offense that is classified as a felony under 18 U.S.C. 3559.

   "**Participant**" means the Recipient, an entity who submits a proposal for a Covered Transaction, or an entity who enters into a Covered Transaction.

   "**Tax Delinquency**" means an unpaid Federal tax liability that has been assessed, for which all judicial and administrative remedies have been exhausted, or have lapsed, and that is not being paid in a timely manner pursuant to an agreement with the authority responsible for collecting the tax liability.

2. **Mandatory Check in the System for Award Management.** Before entering a Covered Transaction with another entity, a Participant shall check the System for Award Management (the "**SAM**") at http://www.sam.gov/ for an entry describing that entity.

3. **Mandatory Certifications.** Before entering a Covered Transaction with another entity, a Participant shall require that entity to:

   (1) Certify whether the entity has a Tax Delinquency; and

   (2) Certify whether the entity has a Felony Conviction.

4 **Prohibition.** If

   (1) the SAM entry for an entity indicates that the entity has a Tax Delinquency or a Federal Conviction;

   (2) an entity provides an affirmative response to either certification in section 3; or

   (3) an entity's certification under section 3 was inaccurate when made or became inaccurate after being made

   then a Participant shall not enter or continue a Covered Transaction with that entity unless the USDOT has determined in writing that suspension or debarment of that entity are not necessary to protect the interests of the Government.

5. **Mandatory Notice to the USDOT.**

   (a) If the SAM entry for a Participant indicates that the Participant has a Tax Delinquency or a Felony Conviction, the Recipient shall notify the USDOT in writing of that entry.

   (b) If a Participant provides an affirmative response to either certification in section 1, the Recipient shall notify the USDOT in writing of that affirmative response.

   (c) If the Recipient knows that a Participant's certification under section 1 was inaccurate when made or became inaccurate after being made, the Recipient shall notify the USDOT in writing of that inaccuracy.

6. **Flow Down.** For all Covered Transactions, including all tiers of subcontracts and subawards, the Recipient shall:

   (1) require the SAM check in section 2;

   (2) require the certifications in section 3;

   (3) include the prohibition in section 4; and

(4) require all Participants to notify the Recipient in writing of any information that would require the Recipient to notify the USDOT under section 5.

TERM B.4
RECIPIENT POLICY TO BAN TEXT MESSAGING WHILE DRIVING

(a) *Definitions.* The following definitions are intended to be consistent with the definitions in DOT Order 3902.10, Text Messaging While Driving (Dec. 30, 2009) and Executive Order 13513, Federal Leadership on Reducing Text Messaging While Driving (Oct. 1, 2009). For clarification purposes, they may expand upon the definitions in the executive order.

For the purpose of this Term B.4, "**Motor Vehicles**" means any vehicle, self-propelled or drawn by mechanical power, designed and operated principally for use on a local, State or Federal roadway, but does not include a military design motor vehicle or any other vehicle excluded under Federal Management Regulation 102-34-15.

For the purpose of this Term B.4, "**Driving**" means operating a motor vehicle on a roadway, including while temporarily stationary because of traffic congestion, a traffic signal, a stop sign, another traffic control device, or otherwise. It does not include being in your vehicle (with or without the motor running) in a location off the roadway where it is safe and legal to remain stationary.

For the purpose of this Term B.4, "**Text messaging**" means reading from or entering data into any handheld or other electronic device (including, but not limited to, cell phones, navigational tools, laptop computers, or other electronic devices), including for the purpose of Short Message Service (SMS) texting, e-mailing, instant messaging, obtaining navigational information, or engaging in any other form of electronic data retrieval or electronic data communication. The term does not include the use of a cell phone or other electronic device for the limited purpose of entering a telephone number to make an outgoing call or answer an incoming call, unless this practice is prohibited by State or local law. The term also does not include glancing at or listening to a navigational device that is secured in a commercially designed holder affixed to the vehicle, provided that the destination and route are programmed into the device either before driving or while stopped in a location off the roadway where it is safe and legal to remain stationary.

For the purpose of this Term B.4, the "**Government**" includes the United States Government and State, local, and tribal governments at all levels.

(b) *Workplace Safety.* In accordance with Executive Order 13513, Federal Leadership on Reducing Text Messaging While Driving (Oct. 1, 2009) and DOT Order 3902.10, Text Messaging While
Driving (Dec. 30, 2009), the Recipient, subrecipients, contractors, and subcontractors are encouraged to:

(1) adopt and enforce workplace safety policies to decrease crashes caused by distracted drivers including policies to ban text messaging while driving—

(i) Company-owned or -rented vehicles or Government-owned, leased or rented vehicles; or

(ii) Privately-owned vehicles when on official Government business or when performing any work for or on behalf of the Government.

(2) Conduct workplace safety initiatives in a manner commensurate with the size of the business, such as—

(i) Establishment of new rules and programs or re-evaluation of existing programs to prohibit text messaging while driving; and

(ii) Education, awareness, and other outreach to employees about the safety risks associated with texting while driving.

(c) *Subawards and Contracts.* To the extent permitted by law, the Recipient shall insert the substance of this exhibit, including this paragraph (c), in all subawards, contracts, and subcontracts under this award that exceed the micro-purchase threshold, other than contracts and subcontracts for the acquisition of commercially available off-the-shelf items.

EXHIBIT C
QUARTERLY PROJECT PROGRESS REPORTS AND RECERTIFICATIONS: FORMAT AND CONTENT

1. **Purpose**. The purpose of the Quarterly Project Progress Reports and Recertifications under this agreement for the FY 2022 SS4A grant program are to ensure that the project scope, schedule, and budget will be maintained to the maximum extent possible.

2. **Format and Content.** The Recipient shall produce a quarterly cost, schedule, and status report that contains the sections enumerated in the following list. At the discretion of the USDOT, modifications or additions can be made to produce a quarterly reporting format that will most effectively serve both the Recipient and the USDOT. Some projects will have a more extensive quarterly status than others. For smaller projects, the USDOT may determine that the content of the quarterly reports will be streamlined and project status meetings will be held on a less-frequent basis. The first quarterly progress report should include a detailed description and, where appropriate, drawings of the items funded.

(a) **Project Overall Status.** This section provides an overall status of the project's scope, schedule and budget. The Recipient shall note and explain any deviations from the scope of work, the schedule, or the budget that are described in this agreement.

(b) **Project Significant Activities and Issues.** This section provides highlights of key activities, accomplishments, and issues occurring on the project during the previous quarter. Activities and deliverables to be reported on should include meetings, audits and other reviews, design packages submitted, advertisements, awards, construction submittals, construction completion milestones, submittals related to any applicable Recovery Act requirements, media or Congressional inquiries, value engineering/constructability reviews, and other items of significance.

(c) **Action Items/Outstanding Issues.** This section should draw attention to, and track the progress of, highly significant or sensitive issues requiring action and direction in order to resolve. The Recipient should include administrative items and outstanding issues that could have a significant or adverse effect on the project's scope, schedule, or budget. Status, responsible person(s), and due dates should be included for each action item/outstanding issue. Action items requiring action or direction should be included in the quarterly status meeting agenda. The action items/outstanding issues may be dropped from this section upon full implementation of the remedial action, and upon no further monitoring anticipated.

(d) **Project Scope Overview.** The purpose of this section is to provide a further update regarding the project scope. If the original scope contained in the grant agreement is still accurate, this section can simply state that the scope is unchanged.

(e) **Project Schedule.** An updated master program schedule reflecting the current status of the program activities should be included in this section. A Gantt (bar) type chart is probably the most appropriate for quarterly reporting purposes, with the ultimate

format to be agreed upon between the Recipient and the USDOT. It is imperative that the master program schedule be integrated, i.e., the individual contract milestones tied to each other, such that any delays occurring in one activity will be reflected throughout the entire program schedule, with a realistic completion date being reported. Narratives, tables, and/or graphs should accompany the updated master program schedule, basically detailing the current schedule status, delays and potential exposures, and recovery efforts. The following information should also be included:

- Current overall project completion percentage vs. latest plan percentage.
- Completion percentages vs. latest plan percentages for major activities such as right-of-way, major or critical design contracts, major or critical construction contracts, and significant force accounts or task orders. A schedule status description should also be included for each of these major or critical elements.
- Any delays or potential exposures to milestone and final completion dates. The delays and exposures should be quantified, and overall schedule impacts assessed. The reasons for the delays and exposures should be explained, and initiatives being analyzed or implemented in order to recover the schedule should be detailed.

(f) Project Cost. An updated cost spreadsheet reflecting the current forecasted cost vs. the latest approved budget vs. the baseline budget should be included in this section. One way to track project cost is to show: (1) Baseline Budget, (2) Latest Approved Budget, (3) Current Forecasted Cost Estimate, (4) Expenditures or Commitments to Date, and (5) Variance between Current Forecasted Cost and Latest Approved Budget. Line items should include all significant cost centers, such as prior costs, right-of-way, preliminary engineering, environmental mitigation, general engineering consultant, section design contracts, construction administration, utilities, construction packages, force accounts/task orders, wrap-up insurance, construction contingencies, management contingencies, and other contingencies. The line items can be broken-up in enough detail such that specific areas of cost change can be sufficiently tracked and future improvements made to the overall cost estimating methodology. A Program Total line should be included at the bottom of the spreadsheet. Narratives, tables, and/or graphs should accompany the updated cost spreadsheet, basically detailing the current cost status, reasons for cost deviations, impacts of cost overruns, and efforts to mitigate cost overruns. The following information should be provided:

- Reasons for each line item deviation from the approved budget, impacts resulting from the deviations, and initiatives being analyzed or implemented in order to recover any cost overruns.

- Transfer of costs to and from contingency line items, and reasons supporting the transfers.

- Speculative cost changes that potentially may develop in the future, a quantified dollar range for each potential cost change, and the current status of the speculative change. Also, a comparison analysis to the available contingency amounts should be included, showing that reasonable and sufficient amounts of contingency remain to keep the project within the latest approved budget.

- Detailed cost breakdown of the general engineering consultant (GEC) services (if applicable), including such line items as contract amounts, task orders issued (amounts), balance remaining for tasks, and accrued (billable) costs.

- Federal obligations and/or disbursements for the project, compared to planned obligations and disbursements.

(g) Federal Financial Report (SF-425). The Federal Financial Report (SF-425) is a financial reporting form used throughout the Federal Government Grant system. Recipients shall complete this form and attach it to each quarterly Project Progress and Monitoring Report. The form is available at https://www.grants.gov/forms/post-award-reporting-forms.html.

(h) Certifications.

i. A certification that the Recipient is in compliance with 2 C.F.R. 200.303 (Internal Controls) and 2 C.F.R. Part 200, Subpart F (Audit Requirements).

ii. The certification required under 2 C.F.R. 200.415(a).

EXHIBIT D
FORM FOR SUBSEQUENT OBLIGATION OF FUNDS

The USDOT and **[recipient name]** entered a grant agreement for the **[project name]** that was executed by the USDOT on **[date of USDOT signature on original agreement]** (the "**Agreement**").

This instrument obligates **[$XXX]** for **[insert portion of project listed in the Agreement]**.

[Recipient name] states that:

(1) the Agreement accurately describe the Project's activities;

(2) for each completion date listed in the Agreement, the Recipient's estimate for that milestone is not more than six months after the date listed in the Agreement;

(3) comparing the Project's current budget with the amounts listed in the Agreement, the "Non-Federal Funds" amount has not decreased and the total eligible project costs amount has not decreased; and

(4) under the terms of article 21 of the General Terms and Conditions, the Recipient is not presently required to request a modification to the Agreement.

[Recipient name] acknowledges that USDOT is acting in reliance on the Recipient's statements above.

July 12, 2023
Date

By: Nicholas Gradisar
Signature of Recipient's Authorized Representative

[insert name] Nicholas Gradisar
Name

[insert title] Mayor
Title

The USDOT has determined that all applicable Federal requirements for obligating these funds are satisfied.

_____By: _____

Date

Signature of USDOT's Authorized Representative

[insert name]

Name

[insert title]

Title

Additional Information for Agreement

Proposer's Agreement to Special Funding Requirements

System for Award Management (SAM.gov) Registration - to be updated prior to agreement signature

Certificate of Good Standing

Affirmative Action Plan

PERA Questionnaire

Insurance Certificate(s) - to be added prior to agreement signature

CERTIFICATION REGARDING
BYRD ANTI-LOBBYING

Award of $100,000 or more; 2 CFR, Part 200, Appendix II(I)

The undersigned Contractor certifies, to the best of his or her knowledge, that:

1. No Federal appropriated funds have been paid or will be paid, by or on behalf of the undersigned, to any person for influencing or attempting to influence an officer or employee of an agency, a Member of Congress, an officer or employee of Congress, or an employee of a Member of Congress in connection with the awarding of any Federal contract, the making of any Federal grant, the making of any Federal loan, the entering into of any cooperative agreement, and the extension, continuation, renewal, amendment, or modification of any Federal contract, grant, loan, or cooperative agreement.

2. If any funds other than Federal appropriated funds have been paid or will be paid to any person for influencing or attempting to influence an officer or employee of any agency, a Member of Congress, an officer or employee of Congress, or an employee of a Member of Congress in connection with this Federal contract, grant, loan, or cooperative agreement, the undersigned shall complete and submit Standard Form- LLL, "Disclosure Form to Report Lobbying," in accordance with its instructions.

3. The undersigned shall require that the language of this certification be included in the award documents for all subawards at all tiers (including subcontracts, subgrants, and contracts under grants, loans, and cooperative agreements) and that all subrecipients shall certify and disclose accordingly.

This certification is a material representation of fact upon which reliance was placed when this transaction was made or entered into. Submission of this certification is a prerequisite for making or entering into this transaction imposed by Section 1352, Title 31, U.S. Code. Any person who fails to file the required certification shall be subject to a civil penalty of not less than $10,000 and not more than $100,000 for each such failure.

The Contractor signed below certifies or affirms the truthfulness and accuracy of each statement of its certification and disclosure, if any. In addition, the Contractor understands and agrees that the provisions of 31 U.S.C. Chapter 38, Administrative Remedies for False claims and Statements, apply to this certification and disclosure, if any.

Contractor Company Name: DiExSys Road Safety Analytics

Signature: _____ Date: 08/04/2024

Printed Name/Title: Jake Kononov/President

CERTIFICATION REGARDING
CONTRACTOR/CONSULTANT AGREEMENT WITH FUNDING REQUIREMENTS

BID: 24-012 (CITY OF PUEBLO)

Contractor/Consultant shall comply with all requirements, terms, and conditions as included in this bid or by reference.

By signature below, Contractor/Consultant certifies that they have received copies of, reviewed, understand, and agree to fully comply with the requirements, terms, and conditions of the SPECIAL FUNDING CONTRACT REQUIREMENTS FOR CITY OF PUEBLO, the Supplement for SS4AFHWA, the Grant Award dated February 8, 2023, and the U.S. Department of Transportation Exhibits to FHWA Grant Agreements dated February 8, 2023.

Contractor Company Name: DiExSys Road Safety Analytics

Signature:_____ Date: 08/04/2024

Printed
Name/Title: Jake Kononov/President

SAM.GOV

DIEXSYS LLC

REVIEWED
By Christina Garcia at 3:53 pm, Aug 08, 2024

Unique Entity ID	CAGE / NCAGE	Purpose of Registration
J88SFM6GM7K8	**6MB21**	**All Awards**
Registration Status	Expiration Date	
Active Registration	**Oct 19, 2024**	
Physical Address	Mailing Address	
3717 Windchant CIR **Castle Rock, Colorado 80104-9648** **United States**	**3717 Windchant CIR** **Castle Rock, Colorado 80104-9648** **United States**	

Business Information

Doing Business as	Division Name	Division Number
(blank)	**Engineering**	**(blank)**
Congressional District	State / Country of Incorporation	URL
Colorado 04	**Colorado / United States**	**https://roadsafetyanalytics.com**

Registration Dates

Activation Date	Submission Date	Initial Registration Date
Oct 24, 2023	**Oct 20, 2023**	**Jan 1, 2012**

Entity Dates

Entity Start Date	Fiscal Year End Close Date
Mar 3, 2003	**Dec 31**

Immediate Owner

CAGE	Legal Business Name
(blank)	**(blank)**

Highest Level Owner

CAGE	Legal Business Name
(blank)	**(blank)**

Executive Compensation

Registrants in the System for Award Management (SAM) respond to the Executive Compensation questions in accordance with Section 6202 of P.L. 110-252, amending the Federal Funding Accountability and Transparency Act (P.L. 109-282). This information is not displayed in SAM. It is sent to USAspending.gov for display in association with an eligible award. Maintaining an active registration in SAM demonstrates the registrant responded to the questions.

Proceedings Questions

Registrants in the System for Award Management (SAM.gov) respond to proceedings questions in accordance with FAR 52.209-7, FAR 52.209-9, or 2. C.F.R. 200 Appendix XII. Their responses are displayed in the responsibility/qualification section of SAM.gov. Maintaining an active registration in SAM.gov demonstrates the registrant responded to the proceedings questions.

Exclusion Summary

Active Exclusions Records?

No

SAM Search Authorization

I authorize my entity's non-sensitive information to be displayed in SAM public search results:

Yes

Entity Types

Business Types

Entity Structure	Entity Type	Organization Factors
Partnership or Limited Liability Partnership	**Business or Organization**	**Limited Liability Company**
Profit Structure		
For Profit Organization		

Socio-Economic Types

Check the registrant's Reps & Certs, if present, under FAR 52.212-3 or FAR 52.219-1 to determine if the entity is an SBA-certified HUBZone small business concern. Additional small business information may be found in the SBA's Dynamic Small Business Search if the entity completed the SBA supplemental pages during registration.

Financial Information

Accepts Credit Card Payments	Debt Subject To Offset
No	**No**

EFT Indicator	CAGE Code
0000	**6MB21**

Points of Contact

Electronic Business

JAKE KONONOV, President

3717 Windchant CIR
Castle Rock, Colorado 80104
United States

JAKE KONONOV

8608 Mountain View LN
Littleton, Colorado 80125
United States

Government Business

JAKE KONONOV, President

3717 Windchant CIR
Castle Rock, Colorado 80104
United States

Service Classifications

NAICS Codes

Primary	NAICS Codes	NAICS Title
Yes	**541330**	**Engineering Services**

Disaster Response

This entity does not appear in the disaster response registry.

3717 Windchant Circle
Castle Rock, CO 80104

AFFIRMATIVE ACTION PLAN

DiExSys does not discriminate against any employee or applicant or employment because of race, color, religion, sex, national origin, creed or age.

Policy Statement

It is the policy of DiExSys LLC to assure that applicants are employed, and that employees are treated during employment, without regard to their race, religion, sex, color, national origin, age or disability. Such action shall include; employment, upgrading, demotion, or transfer; recruitment or recruitment advertising; layoff or termination; rates of pay or other forms of compensation; and selection for training, including apprenticeship, pre-apprenticeship, and/or on-the-job training.

Utilization Analysis

In the spirit of our Affirmative Action Policy two out of seven 28.6% of DiExSys' employees are women.

1. Gillian McCarthy MS, PE-Safety Engineer
2. Marcia Rutherford- GIS Technician

Jake Kononov, PhD, PE
DiExSys Managing Partner

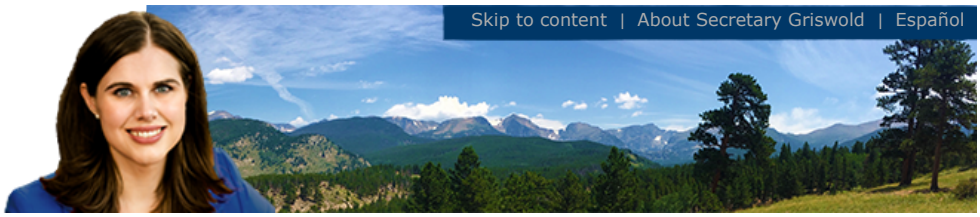

Summary

Details			
Name	DIEXSYS, LLC		
Status	Good Standing	**Formation date**	03/03/2003
ID number	20031069351	**Form**	Limited Liability Company
Periodic report month	March	**Jurisdiction**	Colorado
Principal office street address	3717 Windchant Cir, Castle Rock, CO 80104, US		
Principal office mailing address	3717 Windchant Cir, Castle Rock, CO 80104, US		

Registered Agent	
Name	Jake Kononov
Street address	3717 Windchant Cir, Castle Rock, CO 80104, US
Mailing address	3717 Windchant Cir, Castle Rock, CO 80104, US

Log in to secure business filing

Filing history and documents

View Trademarks

Get a certificate of good standing

Get certified copies of documents

File a form

Subscribe to email notification

Unsubscribe from email notification

Subscribe to text notification

Unsubscribe from text notification

Back

OFFICE OF THE SECRETARY OF STATE
OF THE STATE OF COLORADO

CERTIFICATE OF FACT OF GOOD STANDING

I, Jena Griswold, as the Secretary of State of the State of Colorado, hereby certify that, according to the records of this office,

DIEXSYS, LLC

is a

Limited Liability Company

formed or registered on 03/03/2003 under the law of Colorado, has complied with all applicable requirements of this office, and is in good standing with this office. This entity has been assigned entity identification number 20031069351 .

This certificate reflects facts established or disclosed by documents delivered to this office on paper through 10/08/2024 that have been posted, and by documents delivered to this office electronically through 10/10/2024 @ 08:31:06 .

I have affixed hereto the Great Seal of the State of Colorado and duly generated, executed, and issued this official certificate at Denver, Colorado on 10/10/2024 @ 08:31:06 in accordance with applicable law. This certificate is assigned Confirmation Number 16460778 .

Secretary of State of the State of Colorado

**********End of Certificate**********

Notice: A certificate issued electronically from the Colorado Secretary of State's website is fully and immediately valid and effective. However, as an option, the issuance and validity of a certificate obtained electronically may be established by visiting the Validate a Certificate page of the Secretary of State's website, https://www.coloradosos.gov/biz/CertificateSearchCriteria.do entering the certificate's confirmation number displayed on the certificate, and following the instructions displayed. Confirming the issuance of a certificate is merely optional and is not necessary to the valid and effective issuance of a certificate. For more information, visit our website, https://www.coloradosos.gov click "Businesses, trademarks, trade names" and select "Frequently Asked Questions."

COLORADO PUBLIC EMPLOYEES RETIREMENT ASSOCIATION
SUPPLEMENTAL QUESTIONNAIRE TO BE ANSWERED BY
ANY BUSINESS PERFORMING SERVICES FOR THE CITY OF PUEBLO

Pursuant to section 24-51-1101(2), C.R.S., salary or other compensation from the employment, engagement, retention or other use of a person receiving retirement benefits (Retiree) through the Colorado Public Employees Retirement Association (PERA) in an individual capacity or of any entity owned or operated by a PERA Retiree or an affiliated party by the City of Pueblo to perform any service as an employee, contract employee, consultant, independent contractor, or through other arrangements, is subject to employer contributions to PERA by the City of Pueblo. Therefore, as a condition of contracting for services with the City of Pueblo, this document must be completed, signed and returned to the City of Pueblo:

(a) Are you, or do you employ or engage in any capacity, including an independent contractor, a PERA Retiree who will perform any services for the City of Pueblo? Yes__x_, No___. (If you answered "no" please proceed to signature section at bottom of this page.)

(b) If you answered "yes" to (a) above, please answer the following question: Are you an individual, sole proprietor or partnership, or a business or company owned or operated by a PERA Retiree or an affiliated party? For purposes of responding to this question, an "affiliated party" includes (1) any person who is the named beneficiary or cobeneficiary on the PERA account of the PERA Retiree; (2) any person who is a relative of the PERA Retiree by blood or adoption to and including parents, siblings, half-siblings, children, and grandchildren; (3) any person who is a relative of the PERA Retiree by marriage to and including spouse, spouse's parents, stepparents, stepchildren, stepsiblings, and spouse's siblings; and (4) any person or entity with whom the PERA Retiree has an agreement to share or otherwise profit from the performance of services for the City of Pueblo by the PERA Retiree other than the PERA Retiree's regular salary or compensation. Yes _x___, No____.

If you answered "yes" please state which of the above entities best describes your business:
_____.

(c) If you answered "yes" to both (a) and (b), you agree to reimburse the City of Pueblo for any employer contribution required to be paid by the City of Pueblo to PERA for salary or other compensation paid to you as a PERA Retiree or paid to any employee or independent contractor of yours who is a PERA Retiree performing services for the City of Pueblo. You further authorize the City of Pueblo to deduct and withhold all such contributions from any moneys due or payable to you by the City of Pueblo under any current or future contract or other arrangement for services between you and the City of Pueblo.

Please provide the name, address, date of birth, and social security number of each such PERA Retiree. If more than two, please attach a supplemental list.

Name: Yakov Kononov	Address: 3717 Windchant Cir., Castle Rock, CO 80104	9/26/59	524-23-5024
Name: James Williams	Address: 7363 E Elsworth, Denver, CO 80230	9/8/54	522-76-1273
Name: Richard Sarchet	Address: 165 Sunbury Ln, Fruita CO 81521	8/31/65	523-21-3040

Failure to accurately complete, sign and return this document to the City of Pueblo may result in you being denied the privilege of doing business with the City of Pueblo.

Company Name: Jake Kononov

Authorized Signature: _____ Title: Managing Partner

Printed Name: Jake Kononov Date: October 11, 2024

Docusign Envelope ID: 1DDD049B-FCF9-4559-95A9-751907C4636E

City Clerk's Office Item # M2

Background Paper for Proposed Resolution

COUNCIL MEETING DATE: November 11, 2024

TO: President Mark Aliff and Members of City Council

CC: Mayor Heather Graham

VIA: Marisa Stoller, City Clerk

FROM: Andra Ahrens, Director Wastewater

SUBJECT: A RESOLUTION APPROVING AMENDMENT NO. 1 TO THE AGREEMENT FOR ADDITIONAL PROFESSIONAL CONSULTING SERVICES BETWEEN THE CITY OF PUEBLO, A COLORADO MUNICIPAL CORPORATION, AND BROWN AND CALDWELL, INC., IN THE AMOUNT OF $160,874 FOR PROJECT NO. 18-087 WASTEWATER DEPARTMENT ENGINEER OF RECORD – STOCKYARD ROAD 60- AND 66-INCH PIPELINE CIPP REHABILITATION, AND AUTHORIZING THE PURCHASING AGENT TO EXECUTE THE SAME

SUMMARY:

This Resolution approves Amendment No. 1 to the Professional Consulting Services Agreement awarded to Brown and Caldwell, Inc., in the amount of $160,874 for Project No.18-087 Wastewater Department Engineer of Record – Stockyard Road 60- and 66-inch Pipeline CIPP Rehabilitation.

PREVIOUS COUNCIL ACTION:

Ordinance 10428, dated March 27, 2023, approved an agreement for professional engineering services in the amount of $300,000 to Brown and Caldwell, Inc., for Project No.18-087 Wastewater Department Engineer of Record – Stockyard Road 60- and 66-inch Pipeline CIPP Rehabilitation.

BACKGROUND:

The Wastewater Department requested design services to rehabilitate the existing 60- and 66-inch reinforced concrete sanitary sewer interceptor that serves the entire city. The existing main is in a condition where using a trenchless method by installing cured-in-place pipe, CIPP, will extend the useful life of the pipe.

Amendment 1 to the contract will provide additional work for the project including an alternate design approach to the sewer bypass suction pit. This approach includes the

Docusign Envelope ID: 1DDD049B-FCF9-4559-95A9-751907C4636E

design of a permanent concrete vault between the 102-inch brick storm sewer and the 60-inch RCP sanitary sewer. The concrete vault will be designed and constructed over the existing 48-inch HDPE sanitary sewer while it is in service.

FINANCIAL IMPLICATIONS:

The cost of the agreement with Brown and Caldwell, Inc. to provide additional design services for the rehabilitation project will not exceed $160,874. Funds are available from the Sewer User Fund and have been appropriated to Project No. WWAN02.

BOARD/COMMISSION RECOMMENDATION:

Not applicable

STAKEHOLDER PROCESS:

None

ALTERNATIVES:

Denial of this resolution will cancel the additional design requested by the Wastewater Department

RECOMMENDATION:

Approval of the Resolution.

ATTACHMENTS:

1. 11-11-24 Stockyard Raod Large Main CIPP Lining Design Amenment No. 1 Attachment

Docusign Envelope ID: 1DDD049B-FCF9-4559-95A9-751907C4636E

RESOLUTION NO. 15807

A RESOLUTION APPROVING AMENDMENT NO. 1 TO THE AGREEMENT FOR ADDITIONAL PROFESSIONAL CONSULTING SERVICES BETWEEN THE CITY OF PUEBLO, A COLORADO MUNICIPAL CORPORATION, AND BROWN AND CALDWELL, INC., IN THE AMOUNT OF $160,874 FOR PROJECT NO. 18-087 WASTEWATER DEPARTMENT ENGINEER OF RECORD – STOCKYARD ROAD 60- AND 66-INCH PIPELINE CIPP REHABILITATION, AND AUTHORIZING THE PURCHASING AGENT TO EXECUTE THE SAME

WHEREAS, Project No.18-087 Wastewater Department Engineer of Record – Stockyard Road 60- and 66-inch Pipeline CIPP Rehabilitation was awarded to Brown and Caldwell, Inc. on March 27, 2023; and

WHEREAS, Brown and Caldwell is the consulting Engineer of Record and is the most qualified to serve the Pueblo Wastewater Department for such project;

WHEREAS, additional design and engineering work contemplated by Amendment No. 1 is needed; and

WHEREAS, it is in the best interest of the City to proceed with and complete such design in the manner herein provided; NOW, THEREFORE,

BE IT RESOLVED BY THE CITY COUNCIL OF PUEBLO, that

SECTION 1.

The Amendment No. 1, by and between the City of Pueblo, a Colorado Municipal Corporation, and Brown and Caldwell, Inc., a copy of which is attached hereto, having been approved as to form by the City Attorney, is hereby approved, and City Council authorizes the additional work contemplated by Amendment No. 1 to be performed in the amount of $160,874.

SECTION 2.

Funds in the amount of $160,874 will be paid from Project No. WWAN02.

SECTION 3.

The Purchasing Agent is hereby authorized to execute Amendment No. 1 on behalf of the City of Pueblo, a Colorado Municipal Corporation, and the City Clerk shall affix the seal of the City thereto and attest same.

SECTION 4.

The officers of the City are authorized to perform any and all acts consistent with this Resolution to implement the policies and procedures described herein.

Docusign Envelope ID: 1DDD049B-FCF9-4559-95A9-751907C4636E

SECTION 5.

This Resolution shall become effective immediately upon passage and approval.

INTRODUCED: November 11, 2024

BY: Regina Maestri
MEMBER OF CITY COUNCIL

APPROVED: DocuSigned by: Mark Alliff B7A4F51823AB462...
PRESIDENT OF CITY COUNCIL

ATTESTED BY: DocuSigned by: 7C02EBDFEC3D43C...
CITY CLERK

AMENDMENT NO. 1
TO THE PROFESSIONAL ENGINEERING SERVICES AGREEMENT
BY AND BETWEEN CITY OF PUEBLO AND BROWN AND CALDWELL, INC.

1. INTRODUCTION

This Amendment No. 1 to the Professional Engineering Services Agreement ("Amendment") is executed to be effective as of the _____ day of _____, 20____, by and between the City of Pueblo, a Colorado Municipal Corporation ("Owner") and Brown and Caldwell, Inc., a California Corporation authorized to do business in the State of Colorado ("Engineer"). Owner and Engineer are sometimes referred to herein as a "Party" and collectively, as the "Parties."

2. PROJECT STATEMENT

WITNESSETH THAT:

WHEREAS, Owner and Engineer entered into that certain Professional Engineering Services Agreement dated April 11, 2023 for Bid 18-087 Wastewater Department Engineer of Record - Stockyard Road 60-inch and 66-inch Pipeline CIPP Rehabilitation (the "Agreement").

WHEREAS, Owner and Engineer desire to amend the Agreement pursuant to the provisions set forth herein.

NOW, THEREFORE, in consideration of the foregoing premises, the mutual promises set forth herein and other good and valuable consideration, the receipt and adequacy of which is hereby acknowledged, Owner and Engineer hereby agree to the following conditions.

3. AGREEMENT

A. The Agreement is amended by expanding the scope of services to include the following additional services:

   1. Engineer shall provide additional project management, geotechnical investigations, additional percent and final design (including structural design of the new concrete vault), and additional services for the bid and construction phases as identified in Attachment A.

   2. Attachment A to this Amendment No. 1 shall be additional work as agreed upon by Engineer and Owner, and Engineer shall complete the work items as generally described in said Attachment A in accordance with the terms of the Agreement.

B. With respect to services provided under the Amendment No. 1, the fee schedule attached as Attachment B to this Amendment No. 1 shall apply to compensation payable to Engineer. The aggregate compensation payable to the Engineer for performance of the additional services authorized by this Amendment No. 1 shall not exceed the maximum amount of $160,874.00 as set forth in Attachment B and notwithstanding whether the service is billed as Time and Material.

   1. The compensation payable to the Engineer by this Amendment No. 1 shall be billed at the amounts set forth in the Attachment B.

2. Owner must respond in writing with written approval prior to Engineer beginning work.

C. This Amendment shall be binding upon and inure to the benefit of the Parties hereto and their respective successors and assigns.

D. Except as expressly modified by this Amendment No. 1, the Agreement shall remain in full force and effect. Except as modified by this Amendment No. 1, any obligations to be performed under the Agreement by either party are not waived nor excused in any manner but shall be performed in accordance with the terms and conditions of the Agreement as it existed prior to this Amendment No. 1.

E. This Amendment may be executed in one or more counterparts, each of which shall be deemed an original and all of which shall constitute one and the same document with the same effect as if all Parties had signed the same original. The Parties further agree that transmission of this Amendment by any electronic format, telecopy or via email in a PDF format, shall be deemed transmission of the original Amendment for all purposes. Electronic signatures shall be deemed valid and binding to the same extent as the original

4. SIGNATURE SECTION

IN WITNESS WHEREOF, the parties hereto have caused this instrument to be executed the day and year first above written.

CITY OF PUEBLO, A MUNICIPAL CORPORATION

By_____
Naomi Hedden, Director of Purchasing

Attest_____
Marisa Stoller, City Clerk

BROWN AND CALDWELL, INC.

By_____
Michael J. Thorstenson, Principal-In-Charge

[SEAL]

BALANCE OF APPROPRIATION EXISTS FOR THIS AGREEMENT AND FUNDS ARE AVAILABLE

_____
Danny Nunn, Interim Finance Director

APPROVED AS TO FORM
DEPARTMENT OF LAW

_____
Robert Jagger, Deputy City Attorney

Attachments: Attachment A, Attachment B, and Additional Information for Amendment

Attachment A

Scope of Service

Excerpt from Consultant Proposal dated September 24, 2024, Pages 2 – 7

Background

Brown and Caldwell (BC) have provided engineering services through 100% design level to the City of Pueblo (COP) for design of the rehabilitation via UV Cured CIPP of the Stockyard Road 60- and 66-inch wastewater pipeline as well as associated manhole and vault rehabilitation.

After submission of the 100% design documents, the City requested an alternate design approach to the sewer bypass suction pit. This approach includes the design of a permanent concrete vault between the 102-inch brick storm sewer and the 60-inch RCP sanitary sewer. The concrete vault will be designed and constructed over the existing 48-inch HDPE sanitary sewer while it is in service.

Project Description

This scope of work describes the services to be rendered by Brown and Caldwell (Consultant or BC) for the design of a permanent, concrete vault for the sewer bypass suction pit. The scope of work will include but is not limited to:

- Additional Project Management activities.
- Geotechnical subsurface investigations including soil boring, piezometer installation and monitoring and summary report.
- Structural design of the new concrete vault to include excavation and shoring recommendations and mitigation measures to allow for installation of the new concrete vault.
- Revise the current 100% Design Documents to incorporate the sewer bypass vault.
- Submit 90% Design Documents for City review followed by Final (100%) Design Documents for bidding.
- Additional bid and construction phase services.

This Scope of Services for this Amendment 1 – Bypass Suction Pit Design includes the following tasks, under Phase 600:

Task 1 – Project Management

Task 2 – Geotechnical Investigations

Task 3 – 90% and Final Design

Task 4 – Additional Bid Phase Services

Task 5 – Additional Engineering Services During Construction

One attachment is also included with this Scope of Services:

Attachment 1 – Project Fee for Amendment 1

Revised schedule shall be provided within 3 days of receiving notice to proceed for Amendment 1.

City of Pueblo Responsibility

COP will provide BC all available and relevant information, not already provided, to aid in the design process. This includes, but is not limited to:

- Guidance on scope for repairs to existing 102-inch brick storm sewer.
- Any available CCTV inspection data of the pipelines that has not already been provided.
- Knowledgeable staff who can discuss operational and maintenance issues.
- Flow data information to be used in bypass schematic.
- As built drawings of the pipeline that has not already been provided.
- Available geotechnical information in proximity to project site.
- Additionally, the COP will provide day-to-day oversight of construction Contractor.

Project Assumptions and Limitations

The following assumptions were made in the development of this Amendment:

- City will provide access for BC and its subconsultants in Confluence Park to conduct data collection activities.
- Any City permits required for data collection activities will be the obtained and paid for by the City.
- The vault will be constructed over the existing 48-inch HDPE sanitary sewer under live flow conditions.
- No additional permitting is included as part of this addendum.
- The extents of the existing brick sewer are approximated based on available information provided by the City, and the condition of the brick sewer is not known. A structural assessment of the sewer, including an evaluation of its load carrying capacity and condition, is not possible given the sewer's age, limited accessibility for inspection, and limited available as-built documentation. Therefore, the recommended design approach provided in this scope of work will consider mitigation measures to be implemented by the construction contractor to minimize the potential for disturbance and/or damage to the existing sewer during construction. Unknown defects and/or structural deficiencies that are not known but may be present within the sewer could result in damage and service disruption due to the proximity of the proposed construction. BC will assist the City in developing appropriate protective and mitigation measures to the extent they are feasible and acceptable to the City, but due to the uncertainty of the sewer condition, the risk of impacts cannot be completely avoided.
- Assume that BC to apply approved 2024 rates moving forward with this project. Rates to be applied are those approved by the City of Pueblo in 2024.

Task 1 –Project Management

1.1 Project Management

Project Management for this amendment includes additional project management activities associated with the data collection and design of the sanitary sewer bypass vault. The key elements of project management are described below:

- Amendment development.
  - Coordination with BC subject matter experts (Civil, Structural, and Geotechnical)

  - Scope and fee development.
- Project schedule updates, budget tracking, invoicing, monthly progress reports, etc.
- Design progress meetings and coordination with City PM and staff.
- Contracting and coordination with subconsultant.
- Health and Safety Plan for amendment-related field work.

Deliverables

The following deliverables will be provided as part of this phase:

- Monthly invoices, with update summaries
- Meeting agendas, presentation materials, and minutes

Assumptions

- Amendment duration for final design is 6-months from time of approval/notice to proceed. A revised project schedule will be provided at that time.

Task 2 –Geotechnical Investigations

2.1 Geotechnical Investigations

Geotechnical services to be provided by a subconsultant to BC and will include:

- One (1) geotechnical boring up to a depth of forty (40) feet and associated laboratory testing or as recommended by the geotechnical engineer.
- State permit for groundwater monitoring well, installation of groundwater monitoring well, up to six (6) groundwater measurements, and decommissioning of well.
- Slug Test to determine hydraulic conductivity
- Geotechnical Engineering Report (GER)

BC will review the GER developed by geotechnical subconsultant for purposes of these design services for overall completeness, compatibility, and conformance with the work scope and other contract requirements.

Task 3–90 Percent and Final Design

The intent of the detailed design for Amendment 1 is to revise the existing 100% design documents to include the design for sewer bypass vault. The deliverables associated with this task will be final design documents, suitable for obtaining bids from prequalified contractors.

3.1 90 Percent Design

Objectives

- Complete revised 90 Percent design and provide documents to City for review.
- BC will conduct an internal QA/QC review of materials to be submitted to COP prior to submission.

Deliverables

The following deliverables associated with Amendment No. 1 will be provided:

- Technical specifications (BC Format) – provided electronic only, prior to design review meeting.
- Drawings. BC will provide an electronic copy prior to design review meeting.

90% Design Review Meeting

BC will organize and attend one (1) Design Review Meeting with COP to review the 90 percent design. The meeting will be held following the draft 90 percent submittal and COP review period (10 working days). This meeting is expected to be held virtually and last up to 2 hours.

3.2 Final (100 Percent) Design

Objectives

- 90 percent review comments addressed.
- Complete final design and provide bidding documents.
- BC will conduct an internal QA/QC review of materials to be submitted to COP prior to submission.

Deliverables

The following deliverables will be provided as part of this phase:

- 100 Percent Submittal – A complete electronic (PDF) set of specifications (BC Format) along with the set of Final (100 percent) Design drawings. BC will provide an electronic (PDF) copy of this deliverable.

3.3 Bid Document Preparation

BC will assemble and reproduce the bid ready contract documents associated with this amendment to be issued by COP during the bidding phase.

Objectives

- 100 percent comments are addressed.
- Provide Colorado licensed Professional Engineer stamped design documents.

Task 4 – Additional Bid Phase Services

BC will provide the following Additional Bid Phase Services related to the work provided in Amendment No. 1:

4.1 Bidder Questions

BC will respond to bidders' questions during the bidding period. All questions will be documented and answered in addenda. All responses will be routed through COP for review and approval.

4.2 Addenda

BC will prepare not more than two addenda, as required, to modify or amend the bidding documents as appropriate during the bidding period. A copy of the addenda will be issued to the COP for review and approval. BC assumes not more than 10 hours will be required to prepare each addendum.

Deliverables

The following deliverables will be provided as part of this phase:

- Provide Colorado licensed Professional Engineer stamped design documents at the completion of the bid phase.

Task 5 – Additional Engineering Services During Construction

BC will provide the following Additional Engineering Services During Construction Bid Phase Services related to the work provided in Amendment No. 1:

5.1 Shop Drawing Submittals

Review shop drawings submitted by the Contractor for conformance with the design intent of the contract documents and indicate to the Contractor the acceptability of the submittal. It is assumed that eight (8) shop drawings will be reviewed and no more than (2) reviews per submittal will be required. A total of 40 hours has been budgeted for review of the initial submittal and 2 hours for potential re-submittals (Assumed for half of submittals). BC will maintain a shop drawing submittal log.

5.2 Requests for Information

Respond up to eight (8) Requests for Information (RFI). Eight (8) hours have been allotted for this task. BC will maintain an RFI log.

5.3 Progress Meetings

As part of the original contract, BC will prepare for and lead up to twelve (12) monthly construction meetings (virtually) to facilitate communication among the construction team members during the construction period. BC will also lead an in-person pre-construction meeting.

It is anticipated that a BC structural representative will attend up to four (4) of these meetings.

5.4 On-Site (Observation) Services

On-site observation services during construction of the bypass vault will include periodic observations at key milestones (i.e., scant piles, rebar placement, slab and wall pour). A total of no more than four (4) trips/days to the site are assumed (budgeted 8 hours per visit).

5.5 Record Drawings

BC will provide additional support, from that provided in the original contract, needed to include the bypass vault in the Record Drawings.

Attachment B

Fee Schedule

Excerpt from Consultant Proposal dated September 24, 2024, Pages 9

9/18/2024 **160162 - Stockyard Road CIPP**

Scope Description			Labor Manhours														Labor Cost	ODCS				Subconsultants/ Subcontractors		Total Price	
			Wilson, Chandler	Lambert, Keli A	Davies, Rob	Knitig, Chelsey	Dunn, Haley	Catalano, Larry	Poppe, Mark	Structural	Structural	Henshaw, Dana	Simon, Jerry	Lewis, Chuck	Pennighton, Tom			Airfare	Lodging and Food	Travel	**Total ODCs**	Terracon - Geotechnical			
Task	SubTask	Phase Description	PM	PA	DM	CAD	Eng II	QAQC	Field Tech	CAD	Struct Eng II	Struct Lead	QAQC	QAQC	QAQC	Total Labor Hours	Total Labor Effort					Cost	Total Sub Cost	APC + ODC + Subs	Total Effort
		Rate =	$247.00	$137.00	$247.00	$158.00	$158.00	$269.00	$269.00	$183.00	$183.00	$247.00	$269.00	$269.00	$269.00										
600	**Amendment 1 - Bypass Suction Pit Design**		**40.00**	**16.00**	**50.00**	**24.00**	**12.00**	**2.00**	**2.00**	**116.00**	**56.00**	**212.00**	**58.00**	**20.00**	**14.00**	**622.00**	**$139,774.00**	**$0.00**	**$300.00**	**$670.00**	**$970.00**	**$18,300.00**	**$18,300.00**	**$21,100.00**	**$160,874.00**
	001	Project Mangement	24.00	16.00	32.00				2.00			16.00	16.00	12.00	8.00	126.00	$30,198.00				$0.00		$0.00	$0.00	$30,198.00
	002	Geotechnical Investigations	4.00		2.00							8.00			4.00	18.00	$4,534.00				$0.00	$18,300.00	$18,300.00	$20,130.00	$24,664.00
	003	90% Design and Final	12.00		16.00	24.00	12.00	2.00		92.00	24.00	108.00	42.00	8.00	2.00	342.00	$75,034.00				$0.00		$0.00	$0.00	$75,034.00
	004	Additional Bid Phase Services								4.00		8.00				12.00	$2,708.00				$0.00		$0.00	$0.00	$2,708.00
	005	Additional ESDC								20.00	32.00	72.00				124.00	$27,300.00		$300.00	$670.00	$970.00		$0.00	$970.00	$28,270.00
		GRAND TOTAL	**40**	**16**	**50**	**24**	**12**	**2**	**2**	**116**	**56**	**212**	**58**	**20**	**14**	**622**	**$139,774.00**	**$0.00**	**$300.00**	**$670.00**	**$970.00**	**$18,300.00**	**$18,300.00**	**$21,100.00**	**$160,874.00**

Additional Information for Agreement

Certificate of Good Standing

PERA Questionnaire

Insurance Certificate(s)

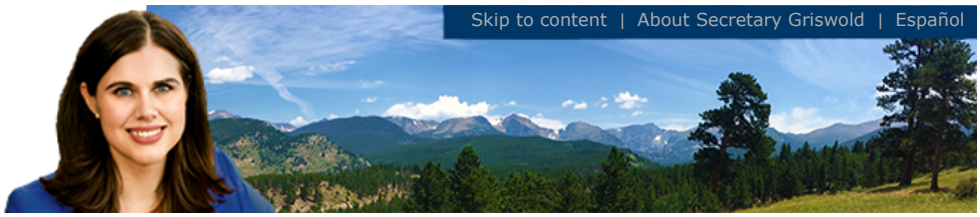

Summary

Details			
Name	BROWN AND CALDWELL, INC.		
Status	Good Standing	**Formation date**	03/20/1978
ID number	19871067502	**Form**	Foreign Corporation
Periodic report month	March	**Jurisdiction**	California
Principal office street address	201 North Civic Drive, Suite 300, Walnut Creek, CA 94596, US		
Principal office mailing address	201 North Civic Drive, Suite 300, Walnut Creek, CA 94596, US		

Registered Agent	
Name	Corporation Service Company
Street address	1900 W Littleton Blvd, Littleton, CO 80120, US
Mailing address	1900 W Littleton Blvd, Littleton, CO 80120, US

Filing history and documents

Get a certificate of good standing

Get certified copies of documents

File a form

Set up secure business filing

Subscribe to email notification

Unsubscribe from email notification

Subscribe to text notification

Unsubscribe from text notification

Back

OFFICE OF THE SECRETARY OF STATE
OF THE STATE OF COLORADO

CERTIFICATE OF FACT OF GOOD STANDING

I, Jena Griswold, as the Secretary of State of the State of Colorado, hereby certify that, according to the records of this office,

BROWN AND CALDWELL, INC.

is an entity formed or registered under the law of California, has complied with all applicable requirements of this office, and is in good standing with this office. This entity has been assigned entity identification number 19871067502 .

This certificate reflects facts established or disclosed by documents delivered to this office on paper through 10/17/2024 that have been posted, and by documents delivered to this office electronically through 10/21/2024 @ 13:42:54 .

I have affixed hereto the Great Seal of the State of Colorado and duly generated, executed, and issued this official certificate at Denver, Colorado on 10/21/2024 @ 13:42:54 in accordance with applicable law. This certificate is assigned Confirmation Number 16490580 .

Secretary of State of the State of Colorado

**********End of Certificate**********

Notice: A certificate issued electronically from the Colorado Secretary of State's website is fully and immediately valid and effective. However, as an option, the issuance and validity of a certificate obtained electronically may be established by visiting the Validate a Certificate page of the Secretary of State's website, https://www.coloradosos.gov/biz/CertificateSearchCriteria.do entering the certificate's confirmation number displayed on the certificate, and following the instructions displayed. Confirming the issuance of a certificate is merely optional and is not necessary to the valid and effective issuance of a certificate. For more information, visit our website, https://www.coloradosos.gov click "Businesses, trademarks, trade names" and select "Frequently Asked Questions."

COLORADO PUBLIC EMPLOYEES RETIREMENT ASSOCIATION
SUPPLEMENTAL QUESTIONNAIRE TO BE ANSWERED BY
ANY BUSINESS PERFORMING SERVICES FOR THE CITY OF PUEBLO

Pursuant to section 24-51-1101(2), C.R.S., salary or other compensation from the employment, engagement, retention or other use of a person receiving retirement benefits (Retiree) through the Colorado Public Employees Retirement Association (PERA) in an individual capacity or of any entity owned or operated by a PERA Retiree or an affiliated party by the City of Pueblo to perform any service as an employee, contract employee, consultant, independent contractor, or through other arrangements, is subject to employer contributions to PERA by the City of Pueblo. Therefore, as a condition of contracting for services with the City of Pueblo, this document must be completed, signed and returned to the City of Pueblo:

(a) Are you, or do you employ or engage in any capacity, including an independent contractor, a PERA Retiree who will perform any services for the City of Pueblo? Yes___, No_X_. (If you answered "no" please proceed to signature section at bottom of this page.)

(b) If you answered "yes" to (a) above, please answer the following question: Are you an individual, sole proprietor or partnership, or a business or company owned or operated by a PERA Retiree or an affiliated party? For purposes of responding to this question, an "affiliated party" includes (1) any person who is the named beneficiary or cobeneficiary on the PERA account of the PERA Retiree; (2) any person who is a relative of the PERA Retiree by blood or adoption to and including parents, siblings, half-siblings, children, and grandchildren; (3) any person who is a relative of the PERA Retiree by marriage to and including spouse, spouse's parents, stepparents, stepchildren, stepsiblings, and spouse's siblings; and (4) any person or entity with whom the PERA Retiree has an agreement to share or otherwise profit from the performance of services for the City of Pueblo by the PERA Retiree other than the PERA Retiree's regular salary or compensation. Yes ____, No____.

If you answered "yes" please state which of the above entities best describes your business:
_____.

(c) If you answered "yes" to both (a) and (b), you agree to reimburse the City of Pueblo for any employer contribution required to be paid by the City of Pueblo to PERA for salary or other compensation paid to you as a PERA Retiree or paid to any employee or independent contractor of yours who is a PERA Retiree performing services for the City of Pueblo. You further authorize the City of Pueblo to deduct and withhold all such contributions from any moneys due or payable to you by the City of Pueblo under any current or future contract or other arrangement for services between you and the City of Pueblo.

Please provide the name, address, date of birth, and social security number of each such PERA Retiree. If more than two, please attach a supplemental list.

Name	Address	DOB	Social Security Number
Name	Address	DOB	Social Security Number

Failure to accurately complete, sign and return this document to the City of Pueblo may result in you being denied the privilege of doing business with the City of Pueblo.

Company Name: Brown and Caldwell

Authorized Signature: Michael J. Thorstenson Title: Managing Director, CS

Printed Name: Michael J. Thorstenson Date: September 22, 2023

CERTIFICATE OF LIABILITY INSURANCE

5/31/2025

DATE (MM/DD/YYYY): 5/16/2024

THIS CERTIFICATE IS ISSUED AS A MATTER OF INFORMATION ONLY AND CONFERS NO RIGHTS UPON THE CERTIFICATE HOLDER. THIS CERTIFICATE DOES NOT AFFIRMATIVELY OR NEGATIVELY AMEND, EXTEND OR ALTER THE COVERAGE AFFORDED BY THE POLICIES BELOW. THIS CERTIFICATE OF INSURANCE DOES NOT CONSTITUTE A CONTRACT BETWEEN THE ISSUING INSURER(S), AUTHORIZED REPRESENTATIVE OR PRODUCER, AND THE CERTIFICATE HOLDER.

IMPORTANT: If the certificate holder is an ADDITIONAL INSURED, the policy(ies) must have ADDITIONAL INSURED provisions or be endorsed. If SUBROGATION IS WAIVED, subject to the terms and conditions of the policy, certain policies may require an endorsement. A statement on this certificate does not confer rights to the certificate holder in lieu of such endorsement(s).

PRODUCER
Lockton Companies
444 W. 47th Street, Suite 900
Kansas City MO 64112-1906
(816) 960-9000
kcasu@lockton.com

CONTACT NAME:
PHONE (A/C, No, Ext): FAX (A/C, No):
E-MAIL ADDRESS:

INSURER(S) AFFORDING COVERAGE	NAIC #
INSURER A : Hartford Fire Insurance Company	19682
INSURER B : Hartford Accident and Indemnity Company	22357
INSURER C : Lloyds of London	
INSURER D : Twin City Fire Insurance Company	29459
INSURER E : Hartford Underwriters Insurance Company	30104
INSURER F :	

INSURED
1051211
BROWN AND CALDWELL
AND ITS WHOLLY OWNED SUBSIDIARIES
AND AFFILIATES
201 NORTH CIVIC DRIVE, SUITE 300
WALNUT CREEK CA 94596

COVERAGES * CERTIFICATE NUMBER: 19439439 REVISION NUMBER: XXXXXXX

THIS IS TO CERTIFY THAT THE POLICIES OF INSURANCE LISTED BELOW HAVE BEEN ISSUED TO THE INSURED NAMED ABOVE FOR THE POLICY PERIOD INDICATED. NOTWITHSTANDING ANY REQUIREMENT, TERM OR CONDITION OF ANY CONTRACT OR OTHER DOCUMENT WITH RESPECT TO WHICH THIS CERTIFICATE MAY BE ISSUED OR MAY PERTAIN, THE INSURANCE AFFORDED BY THE POLICIES DESCRIBED HEREIN IS SUBJECT TO ALL THE TERMS, EXCLUSIONS AND CONDITIONS OF SUCH POLICIES. LIMITS SHOWN MAY HAVE BEEN REDUCED BY PAID CLAIMS.

INSR LTR	TYPE OF INSURANCE	ADDL INSD	SUBR WVD	POLICY NUMBER	POLICY EFF (MM/DD/YYYY)	POLICY EXP (MM/DD/YYYY)	LIMITS	
A	X COMMERCIAL GENERAL LIABILITY	Y	N	37CSEQU1172	5/31/2024	5/31/2025	EACH OCCURRENCE	$ 1,000,000
	CLAIMS-MADE X OCCUR						DAMAGE TO RENTED PREMISES (Ea occurrence)	$ 1,000,000
							MED EXP (Any one person)	$ 10,000
							PERSONAL & ADV INJURY	$ 1,000,000
	GEN'L AGGREGATE LIMIT APPLIES PER:						GENERAL AGGREGATE	$ 2,000,000
	POLICY X PRO-JECT X LOC						PRODUCTS - COMP/OP AGG	$ 2,000,000
	OTHER:							$
A E A	AUTOMOBILE LIABILITY	Y	N	37CSEQU1173 37CSEQU1174 37CSEQU1175	5/31/2024 5/31/2024 5/31/2024	5/31/2025 5/31/2025 5/31/2025	COMBINED SINGLE LIMIT (Ea accident)	$ 1,000,000
	X ANY AUTO						BODILY INJURY (Per person)	$ XXXXXXX
	OWNED AUTOS ONLY / SCHEDULED AUTOS						BODILY INJURY (Per accident)	$ XXXXXXX
	X HIRED AUTOS ONLY / X NON-OWNED AUTOS ONLY						PROPERTY DAMAGE (Per accident)	$ XXXXXXX
								$ XXXXXXX
	UMBRELLA LIAB / OCCUR			NOT APPLICABLE			EACH OCCURRENCE	$ XXXXXXX
	EXCESS LIAB / CLAIMS-MADE						AGGREGATE	$ XXXXXXX
	DED / RETENTION $							$ XXXXXXX
B D	WORKERS COMPENSATION AND EMPLOYERS' LIABILITY	N / A	Y	37WNQU1170 37WBRQU1171	5/31/2024 5/31/2024	5/31/2025 5/31/2025	X PER STATUTE / OTH-ER	
	ANY PROPRIETOR/PARTNER/EXECUTIVE OFFICER/MEMBER EXCLUDED? Y / N: N (Mandatory in NH)						E.L. EACH ACCIDENT	$ 2,000,000
	If yes, describe under DESCRIPTION OF OPERATIONS below						E.L. DISEASE - EA EMPLOYEE	$ 2,000,000
							E.L. DISEASE - POLICY LIMIT	$ 2,000,000
C	PROFESSIONAL LIABILITY	N	N	LDUSA2400482	5/31/2024	5/31/2025	$1,000,000 PER CLAIM & AGGREGATE	

DESCRIPTION OF OPERATIONS / LOCATIONS / VEHICLES (ACORD 101, Additional Remarks Schedule, may be attached if more space is required)

RE: BC SID 105203 – 18-087 WASTEWATER DEPARTMENT ENGINEER OF RECORD – STOCKYARD ROAD 60-INCH AND 66-INCH PIPELINE CIPP REHABILITATION. THE CITY OF PUEBLO, ITS AGENTS, OFFICERS AND EMPLOYEES ARE ADDITIONAL INSUREDS AS RESPECTS GENERAL LIABILITY AND AUTO LIABILITY, AND THESE COVERAGES ARE PRIMARY AND NON-CONTRIBUTORY, AS REQUIRED BY WRITTEN CONTRACT. WAIVER OF SUBROGATION APPLIES TO WORKERS COMPENSATION/EMPLOYER'S LIABILITY WHERE ALLOWED BY STATE LAW AND AS REQUIRED BY WRITTEN CONTRACT.

CERTIFICATE HOLDER

19439439
PUE-25
CITY OF PUEBLO, A MUNICIPAL CORPORATION
230 S MECHANIC STREET
PUEBLO CO 81003

CANCELLATION See Attachment

SHOULD ANY OF THE ABOVE DESCRIBED POLICIES BE CANCELLED BEFORE THE EXPIRATION DATE THEREOF, NOTICE WILL BE DELIVERED IN ACCORDANCE WITH THE POLICY PROVISIONS.

AUTHORIZED REPRESENTATIVE

Joseph M Agnello

© 1988-2015 ACORD CORPORATION. All rights reserved.

The ACORD name and logo are registered marks of ACORD

BROWN AND CALDWELL

CARRIER: LLOYD'S OF LONDON
POLICY NUMBER: LDUSA2400482
EFFECTIVE: 5/31/2024-2025
AM BEST NUMBER: 085202
AM BEST RATING: A XV

LLOYD'S SYNDICATES:

LLOYD'S SYNDICATES:	ALIEN ID Number:
Renassiance Re #1458	AA-1120102
Munitus #7805	AA-1120067
Faraday #435	AA-1126435
Hamilton #4000	AA-1126005
Liberty #4472	AA-1126006

Docusign Envelope ID: 1DDD049B-FCF9-4559-95A9-751907C4636E

City Clerk's Office Item # M3

Background Paper for Proposed Resolution

COUNCIL MEETING DATE: November 11, 2024

TO: President Mark Aliff and Members of City Council

CC: Mayor Heather Graham

VIA: Marisa Stoller, City Clerk

FROM: Steven Meier, Director of Parks and Recreation

SUBJECT: A RESOLUTION APPROVING AN AGREEMENT IN THE AMOUNT OF $149,500 TO CONFLUENCE, INC., FOR DESIGN SERVICES AND SETTING FORTH $25,500 IN CONTINGENCY FOR THE MASTER PLAN FOR CITY PARK AND ARKANSAS RIVER CORRIDOR PROJECT, AND AUTHORIZING THE PURCHASING AGENT TO EXECUTE THE SAME

SUMMARY:

This Resolution awards a contract to Confluence, Inc. for design services as part of the Master Plan for City Park and Arkansas River Corridor Project.

PREVIOUS COUNCIL ACTION:

During the City Council Retreat on February 27, 2021, this project was identified as a priority of City Council.

BACKGROUND:

In 2017, the City of Pueblo and the Pueblo Conservancy District championed an effort to provide a Master Plan for the 2.75-mile stretch of the Arkansas River Flood Levee adjacent to Historic Downtown Pueblo. The planning process was initiated in response to ongoing work at that time to lower the existing Levee in this area, develop safety features to the popular whitewater course, enhance the murals, and access the opportunities and challenges of this popular urban river park. The plan laid out a vision for the area below 4th Street bridge, which increased community focus on active river recreation, improved connectivity to the river, improved the ecology of the river, and increased economic development opportunities.

With the Board of Water Works replacing their water intake below City Park with a boatable structure, the City and the District solicited for a third-party consultant to help expand the vision of the Arkansas River Corridor for further development. Specifically,

Docusign Envelope ID: 1DDD049B-FCF9-4559-95A9-751907C4636E

from the Pueblo Dam to Runyon Lake, the Plan will highlight opportunities and strategies for the segments from the north boundary of City Park and extending through both whitewater parks. The primary goals for the project include developing a Master Plan for:

- Enhancing the corridor for recreation use as the Board of Water Works completes the project to renovate a dam and create a boatable water park.
- To address vehicle movement through and around City Park with safe vehicle access to the water park and identify parking needs.
- To improve pedestrian and bicycle use of the trails.
- To improve water quality and wildlife habitat in the corridor.
- To identify opportunities for art, culture, and learning within the corridor.
- Create new trail connections to adjacent neighborhoods and throughout the Arkansas River Trail System.
- Create resting points and overlooks along the trail with seating, lighting, and information.
- To identify river hazards that must me removed to make the river safe for use.
- To analyze abandoned railroad property in the corridor.

The Master Plan will help guide policy and resource decisions by leaders as the Arkansas River Corridor is further developed. When the Plan is complete, it will help leverage Federal, State, and Local funding opportunities for the Arkansas River Corridor through Pueblo. The Plan is expected to cost up to $175,000, funded with $125,000 from the City's existing Conservation Trust Funds, and $50,000 from the City's ARPA funds which was approved by Resolution 15654 on June 10, 2024.

On July 30, 2024, RFP 24-100 City Park & Arkansas River Corridor Master Plan Project was advertised with seven vendors submitting proposals. After a lengthy evaluation process, Confluence, Inc. was recommended by the Project Evaluation Committee for City Council approval.

FINANCIAL IMPLICATIONS:

The Plan is expected to cost up to $175,000, funded with $125,000 from the City's existing Conservation Trust Funds and $50,000 from City ARPA funds. The Resolution will also set aside $25,500 in contingency funds.

BOARD/COMMISSION RECOMMENDATION:

Not applicable to this Resolution.

STAKEHOLDER PROCESS:

A tenant of the work will be community engagement. As the consultant works to develop the Plan, the City will lead civic engagement and visioning activities with a broad range of stakeholders to be active partners to inform and the ultimate adoption of the Plan.

ALTERNATIVES:

Docusign Envelope ID: 1DDD049B-FCF9-4559-95A9-751907C4636E

City Council could decline the approval of this agreement which would result in the Master Plan for the City Park and Arkansas River Corridor not to be completed.

RECOMMENDATION:

Approval of the Resolution.

ATTACHMENTS:

1. 24-100 Confluence Agmt City Park Arkansas River Corridor Master Plan
2. City_Park_&_Arkansas_River_Corridor_Master_Plan_-_Confluence_09-05-2024
3. 24-100 Evaluation Summary for City Park & Arkansas River Corridor Master Plan Project

Docusign Envelope ID: 1DDD049B-FCF9-4559-95A9-751907C4636E

RESOLUTION NO. 15808

A RESOLUTION APPROVING AN AGREEMENT IN THE AMOUNT OF $149,500 TO CONFLUENCE, INC., FOR DESIGN SERVICES AND SETTING FORTH $25,500 IN CONTINGENCY FOR THE MASTER PLAN FOR CITY PARK AND ARKANSAS RIVER CORRIDOR PROJECT, AND AUTHORIZING THE PURCHASING AGENT TO EXECUTE THE SAME

BE IT RESOLVED BY THE CITY COUNCIL OF PUEBLO, that

SECTION 1.

City Council authorizes and approves the Agreement for Professional Design Services with Confluence, Inc. for the City Park and Arkansas River Corridor Master Plan Project, awarded to said bidder in the amount of $149,500 and setting forth $25,500 in contingencies for the project.

SECTION 2.

Funds for the City Park and Arkansas River Corridor Master Plan Project have been budgeted and appropriated with $125,000 in Conservation Trust Funds provided through Capital Project LT2001 – Parks Renovation City Park.

SECTION 3.

Funds for the City Park and Arkansas River Corridor Master Plan Project have been budgeted and appropriated with $50,000 in American Rescue Plan Act Funds provided through Capital Project CI2113 – ARPA Funds.

SECTION 4.

The Purchasing Agent is hereby authorized to execute said contract on behalf of the City of Pueblo, a Colorado Municipal Corporation, and the City Clerk shall affix the seal of the City thereto and attest the same.

SECTION 5.

The officers and staff of the City are authorized to perform any and all acts consistent with the intent of this Resolution to effectuate the policies and procedures described herein.

SECTION 6.

This Resolution shall become effective immediately upon final passage.

INTRODUCED: November 11, 2024

BY: Regina Maestri
MEMBER OF CITY COUNCIL

APPROVED: DocuSigned by: Mark Alliff
B7A4F51823AB462...
PRESIDENT OF CITY COUNCIL

ATTESTED BY: DocuSigned by:
7C02EBDFFC3D43C...
CITY CLERK

AGREEMENT FOR PROFESSIONAL CONSULTING SERVICES

BY AND BETWEEN CITY OF PUEBLO AND CONFLUENCE, INC.

24-100

CITY PARK & ARKANSAS RIVER CORRIDOR MASTER PLAN PROJECT

AGREEMENT FOR PROFESSIONAL CONSULTING SERVICES BY AND BETWEEN CITY OF PUEBLO AND CONFLUENCE, INC.

1. INTRODUCTION

THIS AGREEMENT ("Agreement") made and entered this _____ day of _____, 20____, by and between the City of Pueblo, a Colorado Municipal Corporation (hereinafter referred to as "City") and Confluence, Inc., an Iowa corporation authorized to do business in Colorado (hereinafter referred to as "Consultant"), a professional firm for Consultant to render certain professional design, planning, and related services for City in connection with Bid 24-100 City Park & Arkansas River Corridor Master Plan Project, hereinafter referred to as the "Project." In consideration of the mutual covenants hereinafter set forth, the parties agree as follows:

A. Consultant shall satisfactorily perform professional project management, data collection and review, community involvement/engagement, community needs assessment, design, planning, reporting, and related services for the Project described in more detail in Schedule 1 attached hereto and incorporated herein by reference (the "Services"). Such Services shall include all usual and customary professional services incidental to the work on the Project. In the event this Agreement follows the selection of Consultant by City pursuant to a Request for Proposals (RFP), all of the requirements of that RFP are incorporated herein by reference, unless any requirement is expressly excluded in Schedule 1.

B. To the extent Consultant performs any of the Project work through subcontractors or subconsultants, Consultant shall be and remain as fully responsible for the full performance and quality of services performed by such subcontractors or subconsultants as it is for services performed directly by Consultant or Consultant's employees.

C. To the extent Consultant requires access to private property to perform its services hereunder, Consultant shall be required to make arrangements to obtain such access. However, in the event City has already secured access for Consultant to any such property through a right of entry agreement, access agreement, letter of consent or other instrument, Consultant shall fully comply with and be subject to the terms and conditions set forth therein. A copy of any such instrument will be provided to Consultant upon request.

2. CONSULTANT'S RESPONSIBILITIES

A. Consultant shall be responsible for the professional quality, technical accuracy, and timely completion of Consultant's work, including that performed by Consultant's subconsultants and subcontractors, and data, design, plans, reports, and other services, irrespective of City's approval of or acquiescence in same. Consultant shall be responsible, in accordance with applicable law, to City for all loss or damage to City caused by Consultant's negligent act or omission; except that Consultant hereby irrevocably waives and excuses City and City's

attorneys from compliance with any requirement to obtain a certificate of review as a condition precedent to commencement of an action, including any such requirements set forth in Section 13-20-602, C.R.S. or similar statute, whether now existing or hereafter enacted.

B. Consultant shall be completely responsible for the safety of Consultant's employees in the execution of work under this Agreement and shall provide all necessary safety and protective equipment for said employees.

C. Consultant acknowledges that time is of the essence with respect to the completion of its services under this Agreement. Consultant represents that Schedule 3 attached hereto is the schedule by which Consultant proposes to accomplish its work, with time periods for which it will commence and complete each major work item. Except to the extent the parties agree to time extensions for delays beyond the control of Consultant, Consultant shall adhere to this schedule and perform its work in a timely manner so as not to delay City's timetable for achievement of interim tasks and final completion of Project work. Consultant further acknowledges that its schedule has accounted for all reasonably anticipated delays, including those inherent in the availability of tools, supplies, labor and utilities required for the work, the availability of information which must be obtained from any third parties, and all conditions to access to public and private facilities.

D. Before undertaking any work or incurring any expense which Consultant considers beyond or in addition to the Services described in Schedule 1 or otherwise contemplated by the terms of this Agreement, Consultant shall advise City in writing that (1) Consultant considers the work beyond the scope of this Agreement, (2) the reasons that Consultant believes the out of scope or additional work should be performed, and (3) a reasonable estimate of the cost of such work. Consultant shall not proceed with any out of scope or additional work until authorized in writing by City. The compensation for such authorized work shall be negotiated, but in the event the parties fail to negotiate or are unable to agree as to compensation, then Consultant shall be compensated for its direct costs and professional time at the rates set forth in Schedule 2 attached hereto.

E. Consultant acknowledges that, due to the nature of the services for this project, related professional services, and the impact of same on the Project, the City has a substantial interest in the personnel and consultants to whom Consultant assigns principal responsibility for services performed under this Agreement. Consequently, Consultant represents that Consultant has selected and intends to employ or assign the key personnel and subconsultants identified in Schedule 4 ("Identification of Personnel, Subcontractors, and Task Responsibility") attached hereto for the Project assignments and areas of responsibility stated therein. Within 10 days of execution of this Agreement, City shall have the right to object in writing to employment on the Project of any such key person, subconsultant, or assignment of principal responsibility, in which case Consultant will employ alternate personnel for such function or reassign such responsibility

to another to whom City has no reasonable objection. Thereafter, Consultant shall not assign or reassign Project work to any person to whom City has reasonable objection.

3. CITY'S RESPONSIBILITIES

A. City agrees to advise Consultant regarding City's Project requirements and to provide all relevant information, data and previous reports accessible to City which Consultant may reasonably require.

B. City shall designate a Project Representative to whom all communications from Consultant shall be directed and who shall have limited administrative authority on behalf of City to receive and transmit information and make decisions with respect to the Project. Said representative shall not, however, have authority to bind City as to matters of governmental policy or fiscal policy, nor to contract for additions or obligations exceeding a value which is the lesser of $5000 or 5% of the maximum agreement price.

C. City shall examine all documents presented by Consultant and render decisions pertaining thereto within a reasonable time. The City's approval of any data, designs, plans, reports, or product furnished hereunder shall not in any way relieve Consultant of responsibility for the professional adequacy of its work.

D. City shall perform its obligations and render decisions within a reasonable time under the circumstances presented. Based upon the nature of City and its requirements, a period of 14 days shall be presumed reasonable for any decision not involving policy decision or significant financial impact, when all information reasonably necessary for City to responsibly render a decision has been furnished. A period of 46 days shall be presumed reasonable for City to act with respect to any matter involving policy or significant financial impact. The above periods of presumed reasonableness shall be extended where information reasonably required is not within the custody or control of City but must be procured from others.

4. TIME FOR PERFORMANCE

Consultant's obligation to render services shall continue for such period of time as may reasonably be required for completion of the work contemplated in Schedule 1 – “Services” and Section 2 of this Agreement. The proposed work schedule attached as Schedule 3 may be adjusted by mutual agreement of all parties.

5. PAYMENT

A. City will pay to Consultant as full compensation for all services required to be performed by Consultant under this Agreement, except for services for additional work or work beyond the scope of this Agreement, an amount not to exceed $149,500.00 in the aggregate as set forth in Schedule 2 "Fee Schedule" and computed in accordance with this Section. In the event compensation for services is set forth in Schedule 2 as to each phase of work indicated in this

Agreement, the maximum amount of compensation for any phase shall not exceed the amount specified in Schedule 2 for such phase.

B. Consultant shall submit periodic, but not more frequently than monthly, applications for payment, aggregating to not more than the maximum amount set forth above, for actual professional services rendered and reimbursable expenses incurred. Such applications shall be submitted based upon the hourly rates and expense reimbursement provisions set forth in Schedule 2 attached hereto and shall contain appropriate documentation that such services have been performed and expenses incurred. Thereafter, City shall pay Consultant for the amount of the application within 45 days of the date of such application is received, provided that sufficient documentation has been furnished, and further provided that City will not be required to pay more than 90% of the maximum amount unless the Consultant's services on the Project phases for which this Agreement is applicable have been completed to City's reasonable satisfaction and all required Consultant submittals have been provided.

C. No separate or additional payment shall be made for profit, overhead, local telephone expenses, lodging, routine photocopying, computer time, secretarial or clerical time or similar expenses unless otherwise provided and listed in Schedule 2 - "Fee Schedule."

D. No compensation shall be paid to Consultant for services required and expenditures incurred in correcting Consultant's mistakes or negligence.

E. Compensation for authorized work beyond the scope of this Agreement shall be governed by Section 2.

6. TERMINATION

A. City reserves the right to terminate this Agreement and Consultant's performance hereunder, at any time upon written notice, either for cause or for convenience. Upon such termination, Consultant and its subcontractors shall cease all work, stop incurring expenses, and shall promptly deliver to City all data. designs, plans, reports, or work product and materials as Consultant may have accumulated in performing this Agreement, together with all finished work and work in progress. Consultant shall at all times act in good faith with respect to the orderly transfer of work to the City or any entity designated by City.

B. Upon termination of this Agreement for events or reasons not the fault of Consultant, Consultant shall be paid at the rates specified in Schedule 2 for all services rendered and reasonable costs incurred to the date of termination; together with any reasonable costs incurred within 10 days of termination provided such latter costs could not be avoided or were incurred in mitigating loss or expenses to Consultant or City. Consultant shall provide a detailed final invoice to the City within fourteen (14) calendar days from the effective date of termination, itemizing the work completed, costs incurred, and any outstanding payments due. In no event shall payment to Consultant upon termination exceed the maximum compensation

provided for complete performance in Section 5, and the Consultant expressly waives any right to claim damages, including but not limited to lost profits, anticipated revenue, or indirect or consequential damages arising out of or relating to the termination for convenience.

C. In the event termination of this Agreement or Consultant's services is for breach of this Agreement by Consultant, or for other fault of Consultant including but not limited to any failure to timely proceed with work, or to pay its employees and Consultants, or to perform work according to the highest professional standards, or to perform work in a manner deemed satisfactory by City's Project Representative, then in that event, Consultant's entire right to compensation shall be limited to the lesser of: (1) the reasonable value of completed work to City, or (2) payment at the rates specified in Schedule 2 for services satisfactorily performed and reimbursable expenses reasonably incurred, prior to date of termination.

D. Consultant's responsibility for its completed work and services shall survive any termination.

7. GENERAL PROVISIONS

7.1. Ownership of Documents

Data, analysis, evaluations, designs, plans, reports, and all other documents or instruments procured or produced by the Consultant in the performance of this Agreement shall be the sole property of the City and the City is vested with all rights therein of whatever kind and however created, whether created by common law, statutory law, or by equity. The Consultant agrees that the City shall have access at all reasonable times to inspect and make copies of all communication, notes, designs, plans, reports, technical data, and all other documents pertaining to the work to be performed under this Agreement. In the event City uses the information provided hereunder for another project independent from Project, without adaptation by Consultant, City shall hold harmless Consultant from all loss, claims, injury, and judgments arising from the use of such information for such other project.

7.2. Advertising

Unless specifically approved in advance in writing by City, Consultant shall not include representations of the Project in any advertising or promotional materials, except for accurate statements contained in resumes or curriculum vitae of Consultant’s employees. If Consultant wishes to include representations in advertising or promotional materials, it shall submit a draft of same and printer’s proof of the proposed advertising or promotional materials to the City for prior review and shall not publish or distribute same unless written approval of the materials is first obtained.

7.3. Equal Employment Opportunity

In connection with the performance of this Agreement, Consultant shall not discriminate against any employee or applicant for employment because of race, color, religion, sex, sexual orientation, national origin, disability, or age. Consultant shall endeavor to ensure that applicants are employed, and that employees are treated during employment without regard to their race, color, religion, sex, sexual orientation, national origin, disability, or age.

7.4. Notices

Any and all notices or other communications required or permitted by this Agreement or by law to be served on or given to either the City or the Consultant by the other party shall be in writing and shall be deemed duly served and given when personally delivered to the party to whom it is directed, or in lieu of such personal service when deposited in the United States mail, first-class postage prepaid, addressed to the City of Pueblo, Department of Parks and Recreation, Attn: Steven Meier, Director, 800 Goodnight Avenue, Pueblo, CO, 81005; or to the Consultant, Confluence, Inc., Attn: Chad Herd, Principal, 3457 Ringsby Ct, Unit 223, Denver, CO, 80216. Either party may change their address for the purpose of this paragraph by giving written notice of such change to the other party in the manner provided in this paragraph.

7.5. Entire Agreement

This instrument contains the entire agreement between the City and the Consultant respecting the Project, and any other written or oral agreement or representation respecting the Project or the duties of either the City or the Consultant in relation thereto not expressly set forth in this instrument are null and void. Notwithstanding the foregoing, the terms of Bid 24-100 City Park & Arkansas River Corridor Master Plan Project are hereby incorporated herein, and Consultant agrees to abide by and comply with the same. In the event of any conflict between any provision of this Agreement and a provision of any Schedule or attachment to this Agreement, the provision in this Agreement shall control and supersede the conflicting provision in the Schedule or attachment. Any inconsistent resolution provision in any attachment to this Agreement shall be void.

7.6. Subcontracts

A. City acknowledges that Consultant is the prime contractor and the only party with whom City has a contractual relationship under this Agreement. To the extent Consultant performs any Project activities through subconsultants or subcontractors, Consultant shall contractually bind each of its subconsultants and subcontractors by subcontract agreement to all of the terms of this Agreement which are for the benefit of City, and City shall be a third-party beneficiary of those subcontract provisions.

B. Consultant shall indemnify and defend City from all claims and demands for payment for services provided by subcontractors of Consultant.

C. Consultant acknowledges that, due to the nature of the services to be provided under this Agreement, the City has a substantial interest in the personnel and consultants to whom Consultant assigns principal responsibility for services performed under this Agreement. Consequently, Consultant represents that it has selected and intends to employ or assign the key personnel and consultants identified in its proposal submitted to City prior to execution of this Agreement to induce City to enter this Agreement. Consultant shall not change such consultants or key personnel except after giving notice of a proposed change to City and receiving City's consent thereto. Consultant shall not assign or reassign Project work to any person to whom City has reasonable objection.

7.7. Successors and Assigns

This Agreement shall be binding on the parties hereto and on their partners, heirs, executors, administrators, successors, and assigns; provided, however, that neither this Agreement, nor any part thereof, nor any moneys due or to become due hereunder to the Consultant may be assigned by it without the written consent of the City. It is expressly understood and agreed that enforcement of the terms and conditions of this Agreement, and all rights of action relating to such enforcement, shall be strictly reserved to the parties hereto, and nothing contained in this Agreement shall give or allow any such claim or right of action by any other or third person or entity on such Agreement. It is the express intention of the parties hereto that any person or entity, other than the parties to this Agreement, receiving services or benefits under this Agreement shall be deemed to be an incidental beneficiary only.

7.8. Amendments

No amendment to this Agreement shall be made nor be enforceable unless made by written Amendment signed by an authorized representatives of both Consultant and City.

7.9. Choice of Law, Jurisdiction, and Venue

Colorado law, the Pueblo City Charter, the Pueblo Municipal Code, and rules and regulations issued pursuant thereto shall be applied in the interpretation, execution, and enforcement of this Agreement. Any provision included or incorporated herein by reference that conflicts with said laws, rules, and regulations shall be null and void. All suits or actions related to this Agreement shall be filed and proceedings held in the State of Colorado and exclusive venue shall be in the County of Pueblo.

7.10. Severability

If any provision of this Agreement, except for Section 2, is determined to be directly contrary to and prohibited by law or the requirements of any federal grant or other Project funding source, then such provision shall be deemed void and the remainder of the Agreement enforced. However, it is the intent of the parties that Section 2 of this Agreement not be severable, and that if any provision of said section be determined to be contrary to law or the terms of any federal grant, then this entire Agreement shall be void.

7.11. Appropriations

A. Subject to execution of this Agreement by the Director of Finance certifying that a balance of appropriation exists and funds are available, the amount of money appropriated for this Agreement is equal to or in excess of the maximum compensation payable hereunder; provided, however, that if work is phased and subject to annual appropriation, funds only in the amount of initial appropriation are available and Consultant shall confirm availability of funds before proceeding with work exceeding initial and subsequent annual appropriations.

B. Financial obligations of the City payable after the current City Fiscal Year are contingent upon funds for that purpose being appropriated, budgeted, and otherwise made available.

8. DISPUTES

Except as herein specifically provided otherwise, disputes concerning the performance of this Agreement which the designated Agreement representatives cannot resolve shall be referred in writing to the Mayor's Office for the City for a final determination of the issue. The Parties agree that participation in this administrative procedure shall be a condition precedent to the initiation of litigation, except in the case of an emergency or other conditions that entitle either Party to seek injunctive or emergency relief from a court of competent jurisdiction, in which no participation in the preceding alternative dispute resolution process shall be required.

9. REQUIRED FEDERAL, STATE, AND/OR GRANT PROVISIONS

A. Consultant understands that City may be funding the Project in whole or part with funds provided by a grant from the American Rescue Plan Act (ARPA), Conservation Trust Funds, and the Pueblo Conservancy District. Consultant agrees it is subject to and shall comply with all applicable provisions of said funding agencies for which the contract award has been made and applicable regulations.

B. Consultant shall comply with the attached [Title of attached requirement clauses] and any/all other Federal, State, and local laws applicable to its activities.

C. All records with respect to any matters covered by this Agreement shall be available for inspection by City and/or grant, state, federal, trust, and conservancy agencies at any time during normal business hours and as often as agencies deem necessary, to audit, examine and make excerpts or transcripts of relevant information, and otherwise to perform its official functions or duties.

D. If any of the work to be performed by Consultant under this Agreement is funded in whole or in part with federal or state funds, then this Agreement shall be construed to include all applicable terms required by the federal or state assistance agreement and integrated federal or state regulations. By executing this Agreement, Consultant agrees to be bound by all such mandatory federal or state requirements, irrespective of Consultant’s actual knowledge or lack of knowledge of such requirements prior to execution of this Agreement.

10. INSURANCE

10.1. Conditions

A. Consultant agrees that it has procured and will maintain during the term of this Agreement, such insurance as will protect it from claims under workers' compensation acts, claims for damages because of bodily injury including personal injury, sickness or disease or death of any of its employees or of any person other than its employees, and from claims or damages because of injury to or destruction of property including loss of use resulting therefrom; and such insurance will provide for coverage in such amounts as set forth below.

B. Consultant agrees to hold harmless, defend and indemnify City from and against any liability to third parties, arising out of negligent acts, errors or omissions of Consultant, their employees, subcontractors, and consultants.

10.2. Minimum Requirements

A. Commercial General Liability Insurance. The Consultant shall secure and maintain during the period of this agreement and for such additional time as work on the project is being performed, Commercial General Liability Insurance issued to and covering the liability of the Consultant with respect to all work performed by it and all its subcontractors under the agreement, to be written on a comprehensive policy form. This insurance shall be written in amounts not less than $1,000,000 for each occurrence and aggregate for personal injury including death and bodily injury and $1,000,000 for each occurrence and aggregate for property damage. This policy of insurance shall name the City of Pueblo, its agents, officers and employees as additional insureds. The policy shall also provide coverage for contractual liability assumed by Consultant under the provisions of the agreement.

B. Comprehensive Automobile Liability Insurance. The Consultant shall procure and maintain during the period of the agreement and for such additional time as work on the project is being performed, Comprehensive Automobile Liability Insurance. This insurance shall be written with limits of liability for and injury to one person in any single occurrence of not less than $350,000 and for any injury to two or more persons in any single occurrence of not less than $1,000,000. Alternate coverage of combined single limit, each accident, in an amount of not less than $1,000,000 may be accepted at the discretion of the Purchasing Director. This insurance shall include uninsured/underinsured motorist coverage and shall protect the Consultant from any and all claims arising from the use both on and off the site of the project of automobiles whether owned, leased, hired or used by Consultant.

C. Workers' Compensation Insurance complying with statutory requirements in Colorado and in any other state or states where the work is performed. The Workers' Compensation Insurance policy shall contain an endorsement waiving subrogation against the City.

D. Professional Liability Insurance with coverage of not less than $1,000,000 in a form and with a deductible acceptable to City.

10.3. Governmental Immunity

Liability for claims for injuries to persons or property arising from the negligence of the City, its departments, boards, commissions committees, bureaus, offices, employees and officials shall be controlled and limited by the provisions of the Colorado Governmental Immunity Act, §24-10-101, et seq., C.R.S.; the Federal Tort Claims Act, 28 U.S.C. Pt. VI, Ch. 171 and 28 U.S.C. 1346(b). No term or condition of this Agreement shall be construed or interpreted as a waiver, express or implied, of any of the immunities, rights, benefits, protections, or other provisions, contained in these statutes.

11. ACCESSIBILITY

The Americans with Disabilities Act (ADA) provides that it is a violation of the ADA to design and construct a facility for first occupancy later than January 26, 1993, that does not meet the accessibility and usability requirements of the ADA except where an entity can demonstrate that it is structurally impractical to meet such requirements. The Consultant therefore, will use its best reasonable professional efforts to implement applicable ADA requirements and other federal, state, and local laws, rules codes, ordinances and regulations as they apply to the Project.

12. IMMIGRATION REFORM AND CONTROL ACT OF 1986

Consultant certifies that it has complied with the United States Immigration Reform and Control Act of 1986. Consultant represents and warrants that to the extent required by said Act, all persons employed by Consultant for performance of this Agreement have completed and signed Form I-9 verifying their identities and authorization for employment.

13. PERA LIABILITY

The Consultant shall reimburse the City for the full amount of any employer contribution required to be paid by the City of Pueblo to the Public Employees' Retirement Association ("PERA") for salary or other compensation paid to a PERA retiree performing contracted services for the City under this Agreement. The Consultant shall complete the Colorado PERA Questionnaire and the completed form shall be included as an Additional Information of the signed Agreement.

14. SCHEDULES

The following Schedules are attached to and made a part of this Agreement:

- Schedule 1 - "Scope of Services" consisting of 5 pages.
- Schedule 2 - "Fee Schedule" consisting of 9 pages.
- Schedule 3 - "Work Schedule" consisting of 1 page.
- Schedule 4 - "Identification of Personnel, Subcontractors, and Task Responsibility" consisting of 7 pages.
- Schedule 5 - " Special Funding Requirements" consisting of 8 pages.

(Signature section on following page.)

15. SIGNATURE

A. This Agreement and all other documents contemplated hereunder may be executed using electronic signatures with delivery via facsimile transmission, by scanning and transmission of electronic files in Portable Document Format (PDF) or other readily available file format, or by copy transmitted via email, or by other electronic means and in one or more counterparts, each of which shall be: (1) an original, and all of which taken together shall constitute one and the same agreement, (2) a valid and binding agreement and fully admissible under state and federal law, and (3) enforceable in accordance with its terms.

B. This Agreement, together with all Project Documents incorporated by reference , constitutes the entire Agreement between City and Contractor with respect to their subject matter, and may not be amended a modified except by written document signed by both parties.

IN WITNESS WHEREOF the parties hereto have made and executed this Agreement as of the day and year first above written.

CITY OF PUEBLO, A MUNICIPAL CORPORATION

By_____
Naomi Hedden, Director of Purchasing

Attest_____
Marisa Stoller, City Clerk

CONSULTANT, CONFLUENCE, INC.

By_____
Chad Herd, Principal

[SEAL]

BALANCE OF APPROPRIATION EXISTS FOR THIS AGREEMENT AND FUNDS ARE AVAILABLE.

_____
Danny Nunn, Interim Finance Director

APPROVED AS TO FORM

_____
Elizabeth Sexton Drake, Assistant City Attorney

Attachments: Schedules 1 - 5 and Additional Attachments for Agreement

Schedule 1

Scope of Service

Excerpt from Request for Proposal dated July 30, 2024, Section 3

3.1. Objective

A. The selected Consultant will create a new Master Plan ("Plan") for the area that will help guide policy and resource decisions by leaders as the Arkansas Corridor is further developed. When the Plan is complete it will help leverage Federal, State, and local funding opportunities.

B. The primary goals for the project include developing a Plan plan for:

1. Enhancing the corridor for recreation use as the Board of Water Works completes their project renovations and create a new recreational and boatable water park
2. Vehicle movement to, through, and around City Park.
    a. How to improve pedestrian and vehicle movement and connect with the new water park (including assess and identify parking needs)
3. Identify and design necessary park improvements to the park and river recreational areas
4. Improved pedestrian and bicycle use of the trails
5. Improved water quality and wildlife habitat in the corridor
6. Identifying opportunities for art, culture, and learning within the corridor
7. New trail connections to adjacent neighborhoods and throughout the river trail system
8. Creating resting points and overlooks along the trail with seating, lighting and information
9. Identifying river hazards that must be removed to make the river safe for water recreational use
10. Analysis of abandoned railroad property in the corridor
    a. Determine whether the railroad property could be better utilized for trail corridors and recreational opportunities.
11. Identify key access points and necessary improvements for users to access and exit the river from the Lake Pueblo dam to Runyon Lake.
12. Evaluate Runyon Lake area and identify what recreational and site improvements are needed to make the area a great anchor for the recreation corridor.

C. The City anticipates that the process will involve a minimum of two public meetings, several meetings with stakeholders and partners, and two meetings with the City Council.

D. The Consultant will be required to develop two or three alternatives, design details of various site improvements, and associated drawings showing different views or perspectives.

3.2. Minimum Qualifications

A. Consultants responding to this request must demonstrate the experience and qualifications of the prime personnel, subconsultants, subcontractors, and team members qualified to perform the services detailed in this RFP.

B. All professionals, if required by the State of Colorado to perform their services, must show proof of licensing.

C. Additionally, Consultants shall be knowledgeable in the regulations and requirements of the City of Pueblo with respect to the services and work contemplated by this agreement. Consultant(s) shall perform such services and work in compliance with each project.

3.3. Scope of Service

The following tasks highlight the minimum work anticipated for this project. The selected Consultant may change or alter the tasks with City's approval.

A. Project Management:

1. Review project schedule, work process, and timeline.
2. Obtain all necessary data, resources, and materials needed to complete the project.
3. The Consultant and the City's Project Manager ("Project Manager") shall conduct progress meetings as often as necessary, no less than twice per month, until the final plan is accepted by City. These meetings can be a combination of conference calls and/or in-person as deemed appropriate between City staff and the Consultant.
4. The Consultant shall supply the Project Manager with at least one (1) electronic copy of all completed or partially completed reports, studies, forecasts, maps or plans at least three (3) working days before each progress meeting.
5. The Project Manager shall work with City staff to schedule advisory committee meetings and other meetings, as necessary, at key times during the Master Plan development process.

B. Data Collection and Review

1. Initial Data Request – The Consultant shall deliver a document identifying all initial background and reference information requested by the Consultant Team. The City will provide copies of all existing studies, plans, programs and other data.
2. Key Staff and Stakeholder Interviews – The consultant shall conduct an estimated eight (8) individual or small group interviews with key City staff and stakeholder entities for the

purposes of building a strong contextual understanding early in the project. The participants and details of these meetings will be developed in coordination with the City's Project Manager.

C. Community Involvement/Engagement Plan

1. The City of Pueblo values citizen involvement and input for decision-making. This plan will rely heavily on the input of citizens through open house meetings, citizen surveys, and other modern methods of community engagement as well as generally keeping citizens informed by the distribution of project updates in press releases, social media, and website updates.

2. The Consultant will develop and utilize innovative and cost-effective methods to generate and maximize public participation in the development of the updated Plan. In addition, the Consultant will work with the City staff, public officials, stakeholder organizations, recreation partners, homeowners' associations, interested individuals, and parties representing a wide range of parks and recreation user groups.

3. Engagement Plan – The Consultant shall develop a document identifying a plan for engagement with stakeholders, the general public, stakeholders and public officials. The Engagement Plan should specify audiences, methods, timeframes, and project team roles. Iterative City review and leadership approval may be required. The Consultant shall update the Engagement Plan following major changes to the planned approach. The Consultant shall conduct all stakeholder and public engagement per the approved Engagement Plan. City staff may be available to support stakeholder engagement activities.

D. Community Needs Assessment

1. Identify the needs of the community and details to provide services appropriate to those needs. Data collection should identify needs, priorities, and physical conditions that make up the community.

2. Determine citizen interest, needs, and customer satisfaction for the city park, natural open space areas, trails, river recreation opportunities and facilities, recreation programs and services, and any others identified in the community's engagement process.

3. Identify and assess apparent overlaps or gaps between City facilities/programs/services and those offered by other providers that offer similar services to the community.

4. The Consultant shall review and inventory all major partnerships and facilities relevant to the needs addressed in this plan.

E. Connectivity Plan:

1. Compile and review existing City connectivity data, visitor numbers (provided by the City), trails connection opportunities, vehicle access, and opportunities/recommendations.

2. The Consultant should evaluate how the users will flow through the City Park and neighborhoods to gain access to the trails and the Arkansas River.

3. Provide design guidelines for access points and trails, including lighting and landscaping standards by section type.

4. Provide design guidelines to create a consistent and fully connected trails system.

    a. Specific guidelines are needed for, but not limited to, signage plan, road crossings (both below and at grade), wash trail corridors, major arterial and local street multiuse corridors, trail head location and design, trail width, acceptable plant palette, slopes, trail location along streets, etc.

5. The Consultant should also evaluate options for right-of-way dedication, use of abandon railroads, and public access easements. pedestrian crossings and other barriers that may need resolved.

F. City Park, Trail, and Arkansas River Master Plan: The Consultant shall develop a Master Plan including an Opinion of Probable Costs that is being considered for development to meet the park and recreation needs of the community. The plan development should be incorporated into the Consultant's overall public outreach approach and included in the Engagement Plan.

G. Master Plan Products/Elements: The following information shall be included in the Master Plan:

1. Develop specific measurable strategic action items, priorities, sequences, capital improvements to implement by short (1-2 years), medium (3-5 years) and long term (6-10 years) timelines. Strategy and timelines will be driven by the program structure derived from citizen desires and preferences and shall, at a minimum, address the following:

    a. Capital Improvement Plan:

        i. A year-to-year prioritized schedule of capital improvements, for incorporation into a short term (2025-2030), and long term (2031-2035) capital improvement program necessary to meet the proposed standards, fulfill community needs identified in the planning process, including potential funding sources and strategies for raising necessary funds.

        ii. Include proposed renovations and new improvements to the park, trail, and river corridor.

        iii. Identify potential new capital improvement projects which will include estimated capital costs and operation/maintenance costs.

        iv. The development of the capital plan should be based on market analysis, cost benefit analysis, revenue opportunities, site analysis, and neighborhood and community impact.

b. Land Acquisition: Access easement and associated improvements to get users to the river. Give complete descriptions and anticipated costs.

H. Project Completion: The Consultant will work with the City to ensure the project is completed per the approved scope of work and all outstanding items are resolved. The Consultant will provide two (2) formal presentations of the draft Master Plan and final Master Plan to the City of Pueblo and Pueblo Conservancy District, which will include all the partners and stakeholders. The Master Plan will require the favorable recommendation by the City Council.

I. Project Expectations/Deliverables: At the completion of the project the City will require the receipt of the following:

1. Working Paper #1 – Summary of Existing Conditions and Trends Analysis
2. Working Paper #2 – Summary of Community Needs Assessment and Inventory/Benchmarking Analysis
3. Draft Master Plan book including color exhibits within the book
4. Final Master Plan book including color exhibits within the book
5. Color executive summaries of the Master Plan
6. One (1) USB flash drive that with an electronic copy of the documents listed above including color exhibits and GIS maps
7. Submit to the City all drawings, exhibits, plans, maps and other related works as part of the project.
   a. Full size color exhibits shall be formatted as 24" x 36"

J. Please bid Study and Report Phase as Items A - E (including items in item I as applicable) above.

K. Please bid Master Plan Phase as Items F - H (including items in item I as applicable) above.

Schedule 2

Fee Schedule

Excerpt from Consultant's Pricing Proposal submitted September 5, 2024

CONFLUENCE RESPONSE DOCUMENT REPORT

RFP No. 24-100

City Park & Arkansas River Corridor Master Plan Project

Report Generated: Friday, October 18, 2024

PRICE TABLES

TABLE 1: NOT TO EXCEED

Refer to Section 2.9A

Line Item	Description	Unit of Measure	Unit Cost
1	Study and Report Phase	Not To Exceed	$72,500.00
2	Master Plan Phase	Not To Exceed	$77,000.00

TABLE 2: HOURLY RATES

Refer to Section 2.9

Line Item	Description	Unit of Measure	Unit Cost
3	Principal	Per Person Per Hour	$225.00
4	General Manager	Per Person Per Hour	$0.00
5	Team Leader	Per Person Per Hour	$190.00
6	Construction Manager	Per Person Per Hour	$0.00

Line Item	Description	Unit of Measure	Unit Cost
7	Senior Project Manager	Per Person Per Hour	$190.00
8	Project Manager	Per Person Per Hour	$150.00
9	Project Lead	Per Person Per Hour	$0.00
10	Project Coordinator	Per Person Per Hour	$0.00
11	QA/QC Manager	Per Person Per Hour	$0.00
12	Principal Engineer	Per Person Per Hour	$0.00
13	Senior Engineer	Per Person Per Hour	$0.00
14	Project Engineer	Per Person Per Hour	$0.00
15	Design Engineer	Per Person Per Hour	$0.00
16	Assistant Project Engineer	Per Person Per Hour	$0.00
17	Engineer In Training	Per Person Per Hour	$0.00

Line Item	Description	Unit of Measure	Unit Cost
18	Senior Planner	Per Person Per Hour	$170.00
19	Senior Project Planner	Per Person Per Hour	$0.00
20	Project Planner	Per Person Per Hour	$150.00
21	Senior Landscape Architect	Per Person Per Hour	$170.00
22	Senior Project Landscape Archtect	Per Person Per Hour	$0.00
23	Project Landscape Architect	Per Person Per Hour	$150.00
24	Associate Landscape Architect	Per Person Per Hour	$150.00
25	Assistant Lansdcape Architect	Per Person Per Hour	$0.00
26	Senior Designer	Per Person Per Hour	$135.00
27	Advanced Design Technician	Per Person Per Hour	$0.00
28	Design Manager	Per Person Per Hour	$0.00

Line Item	Description	Unit of Measure	Unit Cost
29	Design Technical Manager	Per Person Per Hour	$0.00
30	Designer	Per Person Per Hour	$90.00
31	Design Associate	Per Person Per Hour	$0.00
32	Senior Construction Inspector	Per Person Per Hour	$0.00
33	Construction Inspector	Per Person Per Hour	$0.00
34	Building Inspector	Per Person Per Hour	$0.00
35	Senior Technician	Per Person Per Hour	$0.00
36	Technician	Per Person Per Hour	$0.00
37	CAD Manager	Per Person Per Hour	$0.00
38	Drafting Manager	Per Person Per Hour	$0.00
39	Advanced Drafter	Per Person Per Hour	$0.00

Line Item	Description	Unit of Measure	Unit Cost
40	Intermediate Drafter	Per Person Per Hour	$0.00
41	Drafter	Per Person Per Hour	$0.00
42	Land Survey Manager	Per Person Per Hour	$0.00
43	Land Surveyor	Per Person Per Hour	$0.00
44	Survey Technician	Per Person Per Hour	$0.00
45	One-Man Survey	Per Person Per Hour	$0.00
46	Two-Man Survey Crew	Per Person Per Hour	$0.00
47	GIS Analyst	Per Person Per Hour	$150.00
48	Technical Writer	Per Person Per Hour	$0.00
49	Expert Witness	Per Person Per Hour	$0.00
50	Industry Expert	Per Person Per Hour	$0.00

Line Item	Description	Unit of Measure	Unit Cost
51	Intern	Per Person Per Hour	$75.00
52	Senior Business Consultant	Per Person Per Hour	$0.00
53	Senior Adminstrative Assistant	Per Person Per Hour	$0.00
54	Administrative Office Manager	Per Person Per Hour	$0.00
55	Administrative Office Coordinator	Per Person Per Hour	$90.00
56	Administrative Assistant	Per Person Per Hour	$0.00
57	Clerical	Per Person Per Hour	$75.00
58	Network Administrator	Per Person Per Hour	$0.00
59	Marketing Specialist	Per Person Per Hour	$0.00

TABLE 3: HOURLY RATES CONTINUED

Refer to Section 2.9

Line Item	Description	Position	Unit of Measure	Unit Cost
60	Please Enter Job Title in Position Column	River Trail Specialist	Per Person Per Hour	$170.00
61	Please Enter Job Title in Position Column		Per Person Per Hour	$0.00
62	Please Enter Job Title in Position Column		Per Person Per Hour	$0.00
63	Please Enter Job Title in Position Column		Per Person Per Hour	$0.00
64	Please Enter Job Title in Position Column		Per Person Per Hour	$0.00
65	Please Enter Job Title in Position Column		Per Person Per Hour	$0.00
66	Please Enter Job Title in Position Column		Per Person Per Hour	$0.00
67	Please Enter Job Title in Position Column		Per Person Per Hour	$0.00
68	Please Enter Job Title in Position Column		Per Person Per Hour	$0.00
69	Please Enter Job Title in Position Column		Per Person Per Hour	$0.00

TABLE 4: REIMBURSABLE EXPENSES

Refer to Section 2.9

Line Item	Description	Unit of Measure	Unit Cost
70	Mileage, reproduction, etc.	Cost Plus Percent	$1.15
71	Subconsultants	Cost Plus Percent	$1.15

TABLE 5: ADDITIONAL REIMBURSABLES

Refer to Section 2.9

Line Item	Description	Unit of Measure	Unit Cost
72	Reproduction	Each	$0.20
73	Prints (11" x17", 18" x 24")	Each	$1.50
74	Prints (24" x 36")	Each	$2.50

Line Item	Description	Details	Unit of Measure	Unit Cost
75	Recommended Additional Services - Please provide details in the next box.	Social Pinpoint Public Engagement Web Tool	Total	$1,500.00
76	Recommended Additional Services - Please provide details in the next box.	Large Format Color Plotting per SF	Total	$2.50
77	Recommended Additional Services - Please provide details in the next box.	Booklet Binding each	Total	$4.50

Line Item	Description	Details	Unit of Measure	Unit Cost
78	Recommended Additional Services - Please provide details in the next box.	Foam Core (30x42) each	Total	$8.00

Schedule 3

Work Schedule

Excerpt from Consultant's Proposal submitted September 5, 2024, Page 32

SECTION FIVE / PROPOSED TIMELINE

PROJECT TIMELINE WORK PROGRAM

CITY PARK AND ARKANSAS RIVER CORRIDOR MASTER PLAN		2024			2025		
		OCT	NOV	DEC	JAN	FEB	MAR
TASK #	SCOPE ITEM						
A	PROJECT MANAGEMENT KICK OFF						
1	Develop Project Schedule						
2	Obtain all data						
3	Team meetings						
4	Provide materials to city throughout project						
5	Advisory Committee Meetings						
B	DATA COLLECTION AND REVIEW						
1	Data review and request						
2	Key staff and stakeholder interviews (8 meetings)						
C	COMMUNITY OUTREACH / ENGAGEMENT PLAN						
1	Citizen input - open house meetings (2 meetings)						
2	Stakeholder input - Social Pinpoint - Surveys						
3	Engagement Plan						
D	COMMUNITY NEEDS ASSESSMENT (PROGRAM DEVELOPMENT)						
1	Identify needs/priorities of community						
2	Determine interest needs for City Park						
3	Identify gaps in facilities/programs/services						
4	Review and inventory partnerships and facilities						
E	CONNECTIVITY PLAN (ACCESS AND CIRCULATION)						
1	Compile and review City connectivity data						
2	Evaluate user access and flow						
3	Provide guidelines for access and improvement						
4	Provide guidelines for fully connected trails						
5	Evaluate crossings and easements						
F	SITE MASTER PLAN CONCEPTS (DEVELOPMENT ALTERNATIVES)						
1	Develop Master Plan						
2	Estimate Probable Cost						
G	MASTER PLAN ELEMENTS (CAPITAL IMPROVEMENT PLAN)						
1	Prepare Capital Improvement Plan with Action Items						
2	Identify / research land acquisition						
H	PROJECT APPROVALS (MASTER PLAN REVIEW WITH THE CITY)						
1	Review and completion scope with City						
2	Formal Presentations with City and PCD						
PROJECT COMMUNICATION (SUMMARY OF ALL MEETINGS							

Schedule 4

Identification of Personnel, Subcontractors, and Task Responsibility

Excerpt from Consultant's Proposal submitted September 5, 2024, Pages 7 - 13

CHAD HERD, PLA, ASLA
PRINCIPAL + PROJECT LEADER

Chad Herd will be the project design lead and project manager for the Confluence Team. He has a legacy of great design work in the City of Pueblo. He was involved in several stages of the Historic Arkansas Riverwalk of Pueblo (HARP) project, leading design and implementation efforts on many of the prominent areas of the riverwalk. More recently, in 2018, Chad prepared a conceptual master plan for the treatment of the Arkansas River Levee just south of Downtown in the heart of Pueblo. This effort was in concert with the lowering of the levee, which was a several-year engineering project. Chad's efforts to assess the river corridor and adjacent trail to determine appropriate areas for access and activity were documented in a summary master plan document. The focus of this project was just to the east of the current project below and to the north of City Park. Another critical part to the Arkansas River Levee Master Plan was the stakeholder engagement effort. Chad led a stakeholder outreach effort which included a variety of user groups from activities such as kayaking, river surfing, fishing, hiking, cycling and more within the corridor. The public open houses were well attended, and the stakeholder input helped shape the concepts and create community connections to the regional trail system.

CURRENT + NOTABLE PROJECT EXPERIENCE

Arkansas River Levee Master Plan / Pueblo, Colorado

Historic Arkansas Riverwalk of Pueblo (HARP) / Pueblo, Colorado

Bear Creek Master Plan / Medford, Oregon

Sioux Falls Greenway & Riverfront Master Plan / Sioux Falls, South Dakota

Estes Park West Corridor Master Plan / Estes Park, Colorado

El Parque del Rio / Santa Fe, New Mexico

Dakota Ridge – Skyline Open Space / Loveland, Colorado

Boulder Reservoir / Boulder, Colorado

- Visitor's Service Center
- South Shore Site Management Plan

Boettcher Outdoor Education Center – HARP / Pueblo, Colorado

Clear Creek Corridor / Golden, Colorado

Barr Lake State Park - Nature Center / Brighton, Colorado

Staunton State Park / Pine, Colorado

- Master Plan
- Phase One
- Phase One Trails

Colorado Parks & Wildlife Office Relocation / Fort Collins, Colorado

Echo Bluff State Park / Eminence, Missouri

Barnes Softball Complex / Loveland, Colorado

Florence Recreation Complex / Florence, Colorado

Performance Park / Estes Park, Colorado

The Commons, Park Block I & II / Medford, Oregon

HARP Gateway Park / Pueblo, Colorado

PROFESSIONAL EXPERIENCE
35+ Years of Experience

EDUCATION
BLA – Landscape Architecture,
Kansas State University, 1988

PROFESSIONAL + CIVIC AFFILIATIONS

Licensed Landscape Architect:
Colorado / #369
Kansas / #646

CLARB Certification

American Society of Landscape Architects / Colorado

Partnership – Emerging Leaders / Alumni Inaugural Class of 2004

Instructor "Advanced Landscape Architectural Graphics"
University of Colorado- Denver
(2002-2005)

GARY WORTHLEY, ASLA, PLA
PRINCIPAL- IN- CHARGE

Gary is the managing principal of our Denver office. He has more than 25-years of experience designing and implementing projects in Colorado and throughout the Western United States. He brings his imaginative approach to problem-solving together with a knack for developing creative solutions to unique challenges and circumstances.

SELECT HONORS + AWARDS

Merit Award, ASLA for Planning, Staunton State Park, Pine, Colorado

Merit Award, ASLA for Excellence in the Study of Landscape Architecture

Merit Award, American Planning Association, Utah Chapter, A Study in Rural Community Planning

Certificate of Appreciation, US Department of Agriculture, Santa Fe National Forest

Certificate of Appreciation, United States Department of Agriculture – Santa Fe National Forest

CURRENT + NOTABLE PROJECT EXPERIENCE

Ridgeway State Park / Ridgeway, Colorado

Eldorado Canyon State Park / Eldorado Springs, Colorado

Roxborough State Park / Roxborough, Colorado

Staunton State Park / Pine, Colorado

- Master Plan; Visitor Center; Phase 1; Phase 2; Phase 3; Trails Phase 1; Trails Phase 2; Trails Phase 3

Sweetwater Lake Master Development Plan / Garfield County, Colorado

Paako Ridge / Sandia Park, New Mexico

- Master Plan; Key Lodge; Pro Shop; Golf Amenity Clubhouse; Cart Barn; Day Spa; Member Spa

Snowmass Base Village / Snowmass Village, Colorado

Viceroy Hotel / Snowmass Village, Colorado

Westin Hotel / Snowmass Village, Colorado

Wildwood Hotel / Snowmass Village, Colorado

Boyne Highlands (Multiple Phases) / Harbor Springs, Michigan

Edgemont / Steamboat Springs, Colorado

Altis / Mammoth Lakes, California

Village at Wolf / Wolf Creek, Colorado

Jacks Creek Campground / Santa Fe National Forest, New Mexico

Jemez Creek Campground , Santa Fe National Forest, New Mexico

Gondola Square / Steamboat Springs, Colorado1

Thunderhead / Steamboat Springs, Colorado

Copper Mountain Village / Copper Mountain, Colorado

EverVail / Vail, Colorado

PROFESSIONAL EXPERIENCE
26 Years of Experience
6 Years with Confluence

EDUCATION
Utah State University: Master of Landscape Architecture / 1995

Kansas State University: Bachelor of Landscape Architecture / 1993

PROFESSIONAL REGISTRATIONS
Licensed Landscape Architect:
- Alaska / #207408
- Arizona / # 75134
- California / #4913
- Colorado / #247
- Connecticut / LAR-0001642
- Idaho / #16790
- Montana / #19985
- Michigan / #3901001688
- Nevada / #629
- New Mexico / #613
- Oklahoma / # la08054
- Utah / #349762
- Wyoming / #0061C

PROFESSIONAL REGISTRATIONS

American Society of Landscape Architects / Colorado Chapter

WM. CHRISTOPHER CLINE, ASLA, PLA
DESIGN PRINCIPAL

Chris is one of our most talented design principals and will be involved during the early design process to ensure the generation of exciting and unique design ideas. Chris brings over 30+ years of solid urban design and planning experience to the firm, and enjoys collaborating with multi-disciplinary teams. He continually seeks creative solutions, and is adept in building consensus through community involvement. His work has included corridor planning and aesthetics, land planning, urban design, and community revitalization. Chris provides project design and planning oversight and attends key meetings. As the project develops, he will provide input and direction at each stage of the project.

PROFESSIONAL + CIVIC AFFILIATIONS

ASLA Prairie Gateway Chapter / 1990 to Present

- President / 2017 to 2019

TIF Commission, City of Parkville, Missouri / 2017 to 2019, 2021 to Present

Urban Land Institute / 2005 to Present

- Membership Committee Chair / 2014 to 2016
- Programs Committee Chair / 2011 to 2014, 2020 to Present
- Chair of Mission Advancement / 2011 to 2013
- Management Committee Member / 2011 to 2016

American Planning Association / 2017 to Present

Downtown Council of Kansas City / 2001 to Present

- Infrastructure Committee / 2008 to Present
- Parking + Transportation Committee / 2001 to 2005

Kansas City, Kansas Downtown Shareholders, Board of Directors / 2008 to 2014

Northland Redevelopment Partners, Clay County EDC / 2004 to 2006

Neighborhood Housing Services of Kansas City, Board of Directors / 1997 to 2000

Astor Place Homes Association, Founding President / 1994 to 1997

CURRENT + NOTABLE PROJECT EXPERIENCE

E H Young Riverfront Park / Riverside, Missouri

Highland Bridge - Ford Site Redevelopment / St. Paul, Minnesota

Riverwalk Master Plan / St. Cloud, Minnesota

Metro Blue - KC Riverfront Recreation Study / Kansas City, Missouri

Linden Square Amphitheater / Gladstone, Missouri

Linking Historic Shawnee: A Multi-modal Downtown Connectivity Plan - MARC Creating Sustainable Places / Shawnee, Kansas

A New Look at Old Town Downtown Revitalization Study - MARC Creating Sustainable Places / Lenexa, Kansas

Rock Island Corridor Study - MARC Creating Sustainable Places / Raytown, Kansas City, Lee's Summit, Greenwood and Pleasant Hill, Missouri

Kettlestone (Grand Prairie Parkway Corridor) Master Plan + Design Guidelines / Waukee, Iowa

EXPERIENCE
30 Years of Experience
14 Years with Confluence

EDUCATION
Kansas State University:
Bachelor of Landscape Architecture

REGISTRATIONS
Licensed Landscape Architect:
Missouri / #191
Kansas / #548

MIMI WAGNER, ASLA, PLA
RIVER TRAIL SPECIALIST

Mimi's project work focuses primarily on design and planning related to natural resources and people, particularly water. Her background in education and research provides ready skills in public engagement and communication at many different scales from neighborhoods to an entire state. Mimi has experience in the field were she provided professional services in Iowa over four years for work related to dam mitigation, stream restoration, river planning, and river edge infrastructure design. She also worked in education at Iowa State University as an Associate Professor of Landscape Architecture; Graduate Program Director of Sustainable Environments Developed curriculum and taught undergraduate and graduate landscape architecture courses in social and behavioral factors, ecological design, regional design, soils and earthwork, stormwater management, community design.

CURRENT + NOTABLE PROJECT EXPERIENCE

State Water Trail Plans*:

- Upper North Raccoon River Water Trail Plan / Buena Vista, Sac, Calhoun counties, Iowa
- Dubuque County Water Trails Plan / Dubuque County, Iowa
- West Nishnabotna River Water Trail Plan / Shelby County, Iowa
- West Fork Des Moines River Water Trail Plan / Emmet County, Iowa
- Lower Des Moines River Water Trail Plan / Van Buren County, Iowa
- Iowa River Water Trail Plan / Johnson and Louisa Counties, Iowa
- Maquoketa River Water Trail Plan / Delaware County, Iowa
- Skunk River Water Trail Plan / Story County, Iowa
- West Nishnabotna River Water Trail Plan / Pottawattamie County, Iowa

River Front Park Motor Boat and Kayak Ramps / Keosauqua, Iowa*

Midway River Access / Emmet County Iowa*

Riverside Park ADA Fishing Pier, Universal Design Boat Ramp, and Trail Design / Estherville, Iowa*

Little Walnut Creek Stabilization & Trail Construction / Clive, Iowa*

Priest Ravine Remediation / Pleasant Hill, Iowa*

Fort Sheridan Lakeshore Preserve Bartlett Ravine Stream Daylighting / Highland Park, Illinois*

Jester Park Skull Pond Rehabilitation / Granger, Iowa*

Lake Restoration Diagnostics Studies – Watershed Social Assessment

- Easter Lake Watershed / Des Moines, Iowa*
- Clear Lake Watershed / Clear Lake, Iowa*
- Lizard Lake Watershed / Pocahontas County, Iowa*
- Lower Gar chain of lakes Watershed / Dickinson County, Iowa*

Lake LaVerne Vegetated Floating Islands / Ames, Iowa*

Municipal Comprehensive Stream Assessment / Ames, Iowa*

College Creek Restoration and Grant Writing / Ames, Iowa*

** work performed while employed by another firm*

PROFESSIONAL EXPERIENCE

30+ Years of Experience

EDUCATION

Iowa State University: Bachelor of Landscape Architecture

Iowa State University: Master of Landscape Architecture II

PROFESSIONAL REGISTRATIONS

Licensed Professional Landscape Architect:

- Iowa / #267

PROFESSIONAL + CIVIC AFFILIATIONS

American Society of Landscape Architects, Prairie Gateway Chapter

Emerita Associate Professor of Landscape Architecture, Iowa State University / 2021 to Present

Iowa Floodplain and Stormwater Management Association / 2020 to Present; Board Member 2023 to Present

Story County Soil and Water Conservation District Assistant Commissioner / 2010 to Present

American Society of Landscape Architects Iowa Chapter / 1984 to Present

DANIEL BECKERDITE, ASLA, PLA
ASSOCIATE + LANDSCAPE ARCHITECT

Daniel has nearly 20 years of experience taking projects from concept to implementation in Colorado and the West. During this time he has managed a variety of project types from mountain resorts to parks and trails.. He has worked on projects through all phases of development including conceptual design through construction documentation and has extensive experience with construction administration.

CURRENT + NOTABLE PROJECT EXPERIENCE

Altis / Mammoth Lakes, California

Boyne Highlands / Harbor Springs, Michigan

Edgemont / Steamboat Springs, Colorado

Mile High Greyhound Park Redevelopment / Commerce City, Colorado

EverVail / Vail, Colorado

Lone Rock Ranch / Bailey, Colorado

10th Street Townhomes / Denver, Colorado

Jason Street Townhomes / Denver, Colorado

Gondola Square / Steamboat Springs, Colorado

Limelight Hotel / Ketchum, Idaho + Snowmass Village, Colorado

Lionsback Resort (Multiple Phases) / Moab, Utah

Mammoth View / Mammoth Lakes, California

Mammoth Crossing / Mammoth Lakes, California

Mayflower Base Village / Park City, Utah

Arrowhead Nordic Spa / Littleton, Colorado

Mountain Village Hotel / Telluride, Colorado

North Day Lot / Vail, Colorado

One Snowmass / Snowmass Village, Colorado

Paako Ridge / Sandia Park, New Mexico

River Run Hardscape and Snowmelt / Keystone, Colorado

Ski Time Square / Steamboat Springs, Colorado

Snowmass Base Village / Snowmass Village, Colorado

South Hotel and Residence / Mammoth Lakes, California

Thunderhead / Steamboat Springs, Colorado

Vail Marriott Redevelopment / Vail, Colorado

Ridgway State Park / Ridgway, Colorado

Eldorado Canyon State Park / Eldorado Springs, Colorado

Viceroy Hotel / Snowmass Village, Colorado

Roxborough State Park / Roxborough, Colorado

Village at Wolf Creek / Wolf Creek, Colorado

Westin Hotel / Snowmass Village, Colorado

Westin Monache / Mammoth Lakes, California

PROFESSIONAL EXPERIENCE
19 Years of Experience
6 Years with Confluence

EDUCATION
Kansas State University
Bachelor of Landscape Architecture / 2004

Kansas State University
Natural Resources and Environmental Sciences / 2004

PROFESSIONAL REGISTRATIONS
Licensed Landscape Architect
Colorado / #786

PROFESSIONAL + CIVIC AFFILIATIONS
American Society of Landscape Architects / Colorado Chapter

BENNETT RINDY

PROJECT DESIGN & GRAPHIC SUPPORT

Bennett is a talented designer that was drawn to landscape architecture to positively impact the quality of people's lives. He is a design leader that pushed innovative design solutions. Additionally, Bennett is also enthusiastic about design representation through graphics and visualization.

CURRENT + NOTABLE PROJECT EXPERIENCE

1001 NP Site Design & Rooftop Amenity / Fargo, North Dakota

1350 Sheridan / Denver, Colorado

26th and Alcott / Denver, Colorado

76th Avenue South Corridor Study / Fargo, North Dakota

Anne Carlsen Center - Pathways / Jamestown, North Dakota

Antique Building / Fargo, North Dakota

Nordic Spa / Littleton, Colorado

Block 9 Streetscape / Fargo, North Dakota

Boyne Highlands - Pool Area / Harbor Springs, Michigan

Boyne Highlands Spa Redesign 2022 / Harbor Springs, Michigan

Itterman Residence-Additional Services / West Fargo, North Dakota

City of St. Cloud Rendering Services / St. Cloud, Minnesota

FM Rotary Natural Playground / Fargo, North Dakota

Detroit Mountain Rec Area-Natural Playgr / Detroit Lakes, Michigan

Creighton University: Campus Master Plan / Omaha, Nebraska

Mercantile Rooftop / Fargo, North Dakota

North 24th Street Streetscape - Bid / Omaha, Nebraska

Downtown Moorhead Master Plan / Moorhead, Minnesota

Memorial Highway - Addtional Svcs - Ph1 / Mandan, North Dakota

Merhiy Residence / Fargo, North Dakota

Fort Peck-Rendering Services / Fort Peck, Montana

CPW Cameo Project - Pallisade, Colorado / Pallisade, Colorado

Lionsback Resort Phase - Casitas / Moab, Utah

Lone Rock - Village 2 / Los Altos, California

Fargo Sports Complex / Fargo, North Dakota

Red Lake Charter School / Red Lake, Minnesota

Creighton Fundraising Materials / Omaha, Nebraska

MAC Spine Connectivity Project / Council Bluffs, Iowa

Mayflower / Park City, Utah

Ferguson Residence / Boulder, Colorado

Breckenridge Double Tree Hotel / Breckenridge, Colorado

Lionsback Resort Phase II / Moab, Utah

PROFESSIONAL EXPERIENCE

5 years of Experience

5 years with Confluence

EDUCATION

North Dakota State University, MLA, Landscape Architecture / 2022

North Dakota State University, BS, Environmental Design / 2021

CLAIRE HILTON
PROJECT SUPPORT

Claire's appreciation for the natural world began at a young age. She spent her childhood exploring nature and forming relationships with the various forms and niches of Michigan's Upper Peninsula.

She has since had the opportunity to travel and live in other locations across the country, including Colorado, New York, California, and Minnesota. Claire finds inspiration in exploring other cultures and observing her surroundings. Claire exhibits her creativity through the creation and curation of art, fashion, figure skating, and contemporary trends.

PROFESSIONAL + CIVIC AFFILIATIONS

American Society of Landscape Architects / Colorado Chapter

CURRENT + NOTABLE PROJECT EXPERIENCE

8100 W 10th Ave / Lakewood, Colorado

Westin Hotel / Sacramento, California

Sweetwater/ Sweetwater Lake, Colorado

"We Don't Waste"/ Denver, Colorado

Frederick Parks Master Plan / Frederick, Colorado

PROFESSIONAL EXPERIENCE
2 Years of Experience
< 1 Year with Confluence

EDUCATION
University of Minnesota- Twin Cities : Master's Degree in Landscape Architecture/ 2023

Schedule 5

Special Funding Requirements

Excerpt from Request for Proposal dated July 30, 2024, Section 10

10.1. Special Funding Contract Requirements

For use with FEMA, ARPA, SLFRF, and/or other state and federal grant funds and cooperative agreements.

This section shall be added to all City bid projects with the potential utilization of federal or state fund projects (including projects utilizing FEMA, ARPA, SLFRF, or grant funds). The following clauses mirror the Federal Required Contract Provisions available at www.fema.gov/procurement-disaster-assistance-team.

A. Definitions

1. Agreement: For the purposes of this bid and/or project, agreement shall indicate a contract between City and Contractor.
2. Contractor: Awarded bidder, consultant, and/or engineer contracted or under agreement with the City for a specified duration or for specific project work.
3. Contract:: Any form of agreement, award, written contract, issued purchase order, purchase agreement, etc. as issued by the City as a result of a formal or informal bid, cooperative agreement, or other award as determined appropriate by the Purchasing Director and/or City Mayor and/or City Council.

B. Notice

1. The project(s) and contracts utilizing funds from a federally established fund, disaster relief program, state program, or other grant fund are subject to the sections contained herein and signature of the bid by the Contractor shall constitute Contractor's agreement to all terms within this bid, agreement, and/or contract.
2. Failure to adhere to all federal, FEMA, state, grant, and City project requirements may mean suspension or department by the City of Pueblo, the federal government, and other FEMA awarded projects (as per 2 CFR, Part 180, Implementing Executive Orders 12549 and 12689). It is the Contractor's responsibility to adhere to any federal fund project requirements that may be revised, added, stipulated by the situation or federal fund advisor, etc. Additionally, Contractor must adhere to the terms of the grant award as applicable for each project, including all federal laws, executive orders, federal regulations, state oversight regulations, etc. Failure to adhere to these and all other project requirements may mean suspension or department (see section below).

3. As indicated in each Section, some clauses determined nonapplicable for this project may be removed.

10.2. Remedies

Applicable to all contracts/agreements in excess of $250,000; 2 CFR, Part 200, Appendix II(A)

A. All remedies provided for in this Agreement may be exercised individually or in combination with any other remedy available hereunder or under applicable laws, rules and regulations. The exercise of any remedy shall not preclude or in any way be deemed to waive any other remedy.

B. The City may withhold any amount that may be due Contractor as the City deems necessary to protect the City against loss including, without limitation, loss as a result of outstanding liens and excess costs incurred by the City in procuring from third parties replacement products and services necessary to complete the project.

C. City may deny payment for products not received and services not performed, or that due to Contractor's actions/inactions cannot be delivered/performed, or if they were delivered/performed and are reasonably of no value to the City, provided that any denial of payment shall be equal to the value of the City's obligations for products/services not delivered/performed.

D. Although the City does not anticipate the cost of this project to exceed $250,000, this section is included in case of any additional work/tasks assigned that may require agreement of Consultant.

10.3. Termination for Cause and Convenience

Applicable to all contracts/agreements in excess of $10,000; 2 CFR, Part 200, Appendix II(B)

A. Termination for Cause. Contractor's failure to perform or observe any covenant, condition, provision, or term of the contract shall constitute Contractor's default. In the event of Contractor's default, the City shall have the right to exercise its legal and equitable remedies as listed above and may immediately terminate the agreement upon written notice to Contractor.

B. Termination for Convenience. City shall have the option, in its sole discretion, to terminate the contract at any time during the term for convenience and without cause. City shall exercise this option by giving Contractor written notice of termination including date on which termination shall become effective.

C. Within 30 days after specified termination, Contractor shall submit to City a final invoice for actual property shipped, received, and accepted and/or services (partial or in full) accepted as complete by the City's authorized representative. All invoices shall be pro-rated for exact amount of product received or work submitted. City shall not pay any additional costs for loss of work or contract, administrative or work costs after termination date, costs to subcontractors or

subconsultants for loss of work, or any other conditions. The City's payment obligation under this Section shall survive termination of the contract.

10.4. Equal Employment Opportunity

This section is required for all federal grant and cooperative agreement programs; 2 CFR, Part 200, Appendix II(C)

During the performance of this contract, the Contractor agrees as follows:

A. The Contractor will not discriminate against any employee or applicant for employment because of race, color, religion, sex, sexual orientation, gender identity, or national origin. The Contractor will take affirmative action to ensure that applicants are employed, and that employees are treated during employment without regard to their race, color, religion, sex, sexual orientation, gender identity, or national origin. Such action shall include, but not be limited to the following:

   1. Employment, upgrading, demotion, or transfer; recruitment or recruitment advertising; layoff or termination; rates of pay or other forms of compensation; and selection for training, including apprenticeship. The Contractor agrees to post in conspicuous places, available to employees and applicants for employment, notices to be provided setting forth the provisions of this nondiscrimination clause.

B. The Contractor will, in all solicitations or advertisements for employees placed by or on behalf of the Contractor, state that all qualified applicants will receive consideration for employment without regard to race, color, religion, sex, sexual orientation, gender identity, or national origin.

C. The Contractor will not discharge or in any other manner discriminate against any employee or applicant for employment because such employee or applicant has inquired about, discussed, or disclosed the compensation of the employee or applicant or another employee or applicant. This provision shall not apply to instances in which an employee who has access to the compensation information of other employees or applicants as a part of such employee's essential job functions discloses the compensation of such other employees or applicants to individuals who do not otherwise have access to such information, unless such disclosure is in response to a formal complaint or charge, in furtherance of an investigation, proceeding, hearing, or action, including an investigation conducted by the employer, or is consistent with the Contractor's legal duty to furnish information.

D. The Contractor will send to each labor union or representative of workers with which he has a collective bargaining agreement or other contract or understanding, a notice to be provided advising the said labor union or workers' representatives of the Contractor's commitments under this section and shall post copies of the notice in conspicuous places available to employees and applicants for employment.

E. The Contractor will comply with all provisions of Executive Order 11246 of September 24, 1965, and of the rules, regulations, and relevant orders of the Secretary of Labor.

F. The Contractor will furnish all information and reports required by Executive Order 11246 of September 24, 1965, and by rules, regulations, and orders of the Secretary of Labor, or pursuant thereto, and will permit access to his books, records, and accounts by the administering agency and the Secretary of Labor for purposes of investigation to ascertain compliance with such rules, regulations, and orders.

G. In the event of the Contractor's noncompliance with the nondiscrimination clauses of this contract or with any of the said rules, regulations, or orders, this contract may be canceled, terminated, or suspended in whole or in part and the Contractor may be declared ineligible for further Government contracts or federally assisted construction contracts in accordance with procedures authorized in Executive Order 11246 of September 24, 1965, and such other sanctions may be imposed and remedies invoked as provided in Executive Order 11246 of September 24, 1965, or by rule, regulation, or order of the Secretary of Labor, or as otherwise provided by law.

H. The Contractor will include the portion of the sentence immediately preceding paragraph A and the provisions of paragraphs A through H in every subcontract or purchase order unless exempted by rules, regulations, or orders of the Secretary of Labor issued pursuant to section 204 of Executive Order 11246 of September 24, 1965, so that such provisions will be binding upon each subcontractor or vendor. The Contractor will take such action with respect to any subcontract or purchase order as the administering agency may direct as a means of enforcing such provisions, including sanctions for noncompliance:

   1. Provided, however, that in the event a Contractor becomes involved in, or is threatened with, litigation with a subcontractor or vendor as a result of such direction by the administering agency, the Contractor may request the United States to enter into such litigation to protect the interests of the United States.

10.5. Rights to Inventions Made Under a Contract/Agreement

Applicable to contracts for performance of experimental, developmental, or research work; 2 CFR, Part 220, Appendix II(F)

If the Contractor qualifies as a small business firm or nonprofit organization regarding the substitution of parties, assignment or performance of experimental, developmental, or research work under the federal funding contract, the Contractor must comply with the requirements of 37 CFR Part 401, “Rights to Inventions Made by Nonprofit Organizations and Small Business Firms Under Government Grants, Contracts and Cooperative Agreements.”

10.6. Clean Air Act and The Federal Water Pollution Control Act

Contracts in excess of $150,000; 2 CFR, Part 200, Appendix II(G)

A. Clean Air Act:

1. The Contractor agrees to comply with all applicable standards, orders or regulations issued pursuant to the Clean Air Act, as amended, 42 U.S.C. § 7401 et seq.
2. The Contractor agrees to report each violation to the City and understands and agrees that the City will, in turn, report each violation as required to assure notification to the federal, state, or other grant funding agency and the appropriate Environmental Protection Agency Regional Office.
3. The Contractor agrees to include these requirements in each subcontract meeting or exceeding $150,000.

B. Federal Water Pollution Control Act:

1. The Contractor agrees to comply with all applicable standards, orders or regulations issued pursuant to the Federal Water Pollution Control Act, as amended, 33 U.S.C. § 1251 et seq.
2. The Contractor agrees to report each violation to the City and understands and agrees that the City will, in turn, report each violation as required to assure notification to the federal, state, or other grant funding agency and the appropriate Environmental Protection Agency Regional Office.
3. The Contractor agrees to include these requirements in each subcontract meeting or exceeding $150,000.

10.7. Debarment and Suspension

Required for all federal, state, grant, and cooperative agreement programs; 2 CFR, Part 200, Appendix II(H)

A. This contract is a covered transaction for purposes of 2 CFR, Part 180 and 2 CFR, Part 3000. As such the Contractor is required to verify that none of the Contractor, its principals (defined at 2 CFR Section 180.995) or its affiliates (defined at 2 CFR Section 180.905) are excluded (defined at 2 CFR Section 180.940) or disqualified (defined at 2 CFR Section 180.935).

B. The Contractor must comply with 2 CFR Part 180, subpart C and 2 CFR Part 3000, subpart C and must include a requirement to comply with these regulations in any lower tier covered transaction it enters into.

C. This certification is a material representation of fact relied upon by City. If it is later determined that the Contractor did not comply with 2 CFR Part 180, subpart C and 2 CFR Part 3000, subpart C, in addition to remedies available to City, the federal government may pursue available remedies, including but not limited to suspension and/or debarment.

D. The bidder agrees to comply with the requirements of 2 CFR Part 180, subpart C and 2 CFR Part 3000, subpart C while this offer is valid and throughout the period of any contract that may arise from this offer. The Proposer further agrees to include a provision requiring such compliance in its lower tier covered transactions.

10.8. Byrd Anti-lobbying Amendment

Award of $100,000 or more; 2 CFR, Part 200, Appendix II(I)

Contractors must sign and submit to the City the Byrd Anti-lobbying Amendment Certification. Contractors who apply or bid for an award of $100,000 or more shall file the required certification. Each tier certifies to the tier above that it will not and has not used federal appropriated funds to pay any person or organization for influencing or attempting to influence an officer or employee of any agency, a member of Congress, officer or employee of Congress, or an employee of a member of Congress in connection with obtaining any Federal contract, grant, or any other award covered by 31 U.S.C. § 1352. Each tier shall also disclose any lobbying with non-federal funds that takes place in connection with obtaining any federal award. Such disclosures are forwarded from tier to tier up to the recipient.

10.9. Procurement of Recovered Materials

Required for all federal grant and cooperative agreement programs; 2 CFR, Part 200, Appendix II(J)

A. In the performance of this contract/agreement, the Contractor shall make maximum use of products containing recovered materials that are EPA-designated items in accordance with 40 C.F.R. Part 247, unless the product cannot be acquired:

    1. Competitively within a timeframe providing for compliance with the contract performance schedule.

    2. Meeting contract performance requirements.

    3. At a reasonable price.

B. Information about this requirement, along with the list of EPA-designate items, is available at EPA's Comprehensive Procurement Guidelines web site, https://www.epa.gov/smm/comprehensive-procurement-guideline-cpg-program.

C. The Contractor also agrees to comply with all other applicable requirements of Section 6002 of the Solid Waste Disposal Act, as amended by the Resource Conservation and Recovery Act.

10.10. Domestic Preferences for Procurement

Required for all federal grant and cooperative agreement programs; 2 CFR, Part 200, Appendix II(L)

To the extent consistent with law and in accordance with 2 C.F.R. § 200.322, Contractor and all of its subcontractors will to the greatest extent practicable under the Contract, provide a preference for the purchase, acquisition, or use of goods, products, or materials produced in the United States (including but not limited to iron, aluminum, steel, cement, and other manufactured products). This requirement must be included in all contracts and purchase orders that Contractor may enter into.

10.11. Access to Records

This section from Recommended Contract Provision No. 1; Required for all City federally funded projects

A. The Contractor agrees to provide the federal fund and/or grant provider, the City, the Comptroller General of the United States, and/or any of their authorized representatives access to any books, documents, papers, and records of the Contractor which are directly pertinent to this contract for the purposes of making audits, examinations, excerpts and transcriptions.

B. The Contractor agrees to permit any of the foregoing parties to reproduce by any means whatsoever or to copy excerpts and transcriptions as reasonably needed.

C. In compliance with the Disaster Recovery Act of 2018, the City and the Contractor acknowledge and agree that no language in this contract is intended to prohibit audits or internal reviews by the federal fund and/or grant provider or the Comptroller General of the United States.

10.12. Changes

This section from Recommended Contract Provision No. 2; Required for all City federally funded projects

A. The cost of changes, modifications, change orders, or constructive changes must be allowable, allocable, within the scope of its grant or cooperative agreement, and reasonable for the completion of the project scope.

B. Changes can be made by either party to alter the method, price, or schedule of the work without breaching the contract as long as the City and Contractor agree to change in writing and change still meets any funding submittal and expiration dates.

10.13. Department of Homeland Security Seal, Logo, and Flags

This section from Recommended Contract Provision No. 3; Required for all City federally funded projects

The Contractor shall not use the Department of Homeland Security (DHS) seal(s), logos, crests, or reproductions of flags or likenesses of DHS agency officials without specific federal fund and or grant administrator approval.

10.14. Compliance with Federal Law, Regulations, and Executive Orders

This section from Recommended Contract Provision No. 4; Required for all City federally funded projects

This is an acknowledgement that federal financial assistance will be used to fund all or a portion of the contract. The Contractor will comply with all applicable federal law, regulations, executive orders, federal policies, procedures, and directives.

10.15. No Obligation by Federal Government

This section from Recommended Contract Provision No. 5; Required for all City federally funded projects

The Federal Government is not a party to this contract and is not subject to any obligations or liabilities to the non-federal entity, Contractor, or any other party pertaining to any matter resulting from the contract.

10.16. Fraud and False or Fraudulent or Related Acts

This section from Recommended Contract Provision No. 6; Required for all City federally funded projects

The Contractor acknowledges that 31 U.S.C. Chapter 38 (Administrative Remedies for False Claims or Statements) applies to the Contractor's actions pertaining to this contact.

Additional Information for Agreement

Proposer's Agreement to Special Funding Requirements

System for Award Management (SAM.gov) Registration

Certificate of Good Standing

Affirmative Action Plan – To be added prior to agreement signatures

PERA Questionnaire - To be added prior to agreement signatures

Insurance Certificate(s) - To be added prior to agreement signatures

CERTIFICATION REGARDING
BYRD ANTI-LOBBYING

Award of $100,00 or more; 2 CFR, Part 200, Appendix II(I)

The undersigned Contractor certifies, to the best of his or her knowledge, that:

1. No Federal appropriated funds have been paid or will be paid, by or on behalf of the undersigned, to any person for influencing or attempting to influence an officer or employee of an agency, a Member of Congress, an officer or employee of Congress, or an employee of a Member of Congress in connection with the awarding of any Federal contract, the making of any Federal grant, the making of any Federal loan, the entering into of any cooperative agreement, and the extension, continuation, renewal, amendment, or modification of any Federal contract, grant, loan, or cooperative agreement.

2. If any funds other than Federal appropriated funds have been paid or will be paid to any person for influencing or attempting to influence an officer or employee of any agency, a Member of Congress, an officer or employee of Congress, or an employee of a Member of Congress in connection with this Federal contract, grant, loan, or cooperative agreement, the undersigned shall complete and submit Standard Form- LLL, "Disclosure Form to Report Lobbying," in accordance with its instructions.

3. The undersigned shall require that the language of this certification be included in the award documents for all subawards at all tiers (including subcontracts, subgrants, and contracts under grants, loans, and cooperative agreements) and that all subrecipients shall certify and disclose accordingly.

This certification is a material representation of fact upon which reliance was placed when this transaction was made or entered into. Submission of this certification is a prerequisite for making or entering into this transaction imposed by Section 1352, Title 31, U.S. Code. Any person who fails to file the required certification shall be subject to a civil penalty of not less than $10,000 and not more than $100,000 for each such failure.

The Contractor signed below certifies or affirms the truthfulness and accuracy of each statement of its certification and disclosure, if any. In addition, the Contractor understands and agrees that the provisions of 31 U.S.C. Chapter 38, Administrative Remedies for False claims and Statements, apply to this certification and disclosure, if any.

Contractor Company Name: Confluence

Signature: _____ Date: 09-05-2024

Printed Name/Title: Chad Herd, PLA, ASLA - Principal

SAM.GOV

CONFLUENCE, INC.

Unique Entity ID	CAGE / NCAGE	Purpose of Registration
FJXGDLJJTPJ8	**5G2V2**	**All Awards**
Registration Status	Expiration Date	
Active Registration	**Jan 2, 2025**	
Physical Address	Mailing Address	
525 17TH ST **Des Moines, Iowa 50309-3349** **United States**	**CONFLUENCE, INC.** **525 - 17TH Street** **Des Moines, Iowa 50309-3349** **United States**	

Business Information

Doing Business as	Division Name	Division Number
CONFLUENCE INC	**(blank)**	**(blank)**
Congressional District	State / Country of Incorporation	URL
Iowa 03	**Iowa / United States**	**http://www.thinkconfluence.com**

Registration Dates

Activation Date	Submission Date	Initial Registration Date
Jan 5, 2024	**Jan 3, 2024**	**May 8, 2009**

Entity Dates

Entity Start Date	Fiscal Year End Close Date
Jun 29, 1998	**Dec 31**

Immediate Owner

CAGE	Legal Business Name
(blank)	**(blank)**

Highest Level Owner

CAGE	Legal Business Name
(blank)	**(blank)**

Executive Compensation

Registrants in the System for Award Management (SAM) respond to the Executive Compensation questions in accordance with Section 6202 of P.L. 110-252, amending the Federal Funding Accountability and Transparency Act (P.L. 109-282). This information is not displayed in SAM. It is sent to USAspending.gov for display in association with an eligible award. Maintaining an active registration in SAM demonstrates the registrant responded to the questions.

Proceedings Questions

Registrants in the System for Award Management (SAM.gov) respond to proceedings questions in accordance with FAR 52.209-7, FAR 52.209-9, or 2. C.F.R. 200 Appendix XII. Their responses are displayed in the responsibility/qualification section of SAM.gov. Maintaining an active registration in SAM.gov demonstrates the registrant responded to the proceedings questions.

Exclusion Summary

Active Exclusions Records?

No

SAM Search Authorization

I authorize my entity's non-sensitive information to be displayed in SAM public search results:

Yes

Entity Types

Business Types

Entity Structure	Entity Type	Organization Factors
Corporate Entity (Not Tax Exempt)	**Business or Organization**	**Subchapter S Corporation**
Profit Structure		
For Profit Organization		

Socio-Economic Types

Check the registrant's Reps & Certs, if present, under FAR 52.212-3 or FAR 52.219-1 to determine if the entity is an SBA-certified HUBZone small business concern. Additional small business information may be found in the SBA's Dynamic Small Business Search if the entity completed the SBA supplemental pages during registration.

Financial Information

Accepts Credit Card Payments	Debt Subject To Offset
No	**No**

EFT Indicator	CAGE Code
0000	**5G2V2**

Points of Contact

Electronic Business

CHRISTOPHER J Della Vedova, President

525 17TH Street
Des Moines, Iowa 50309
United States

TERRY Berkbuegler, Principal

307 N Michigan AVE, Suite 601
Chicago, Illinois 60601
United States

Government Business

Christopher J Della Vedova, President / Senior Principal

525 17TH Street
Des Moines, Iowa 50309
United States

TERRY Berkbuegler, Principal

307 N Michigan AVE, Suite 601
Chicago, Illinois 60601
United States

Past Performance

CHRISTOPHER J Della Vedova, Senior Principal

525 17TH Street
Des Moines, Iowa 50309
United States

Terry Berkbuegler, Principal

307 N Michigan AVE, Suite 601
Chicago, Illinois 60601
United States

Service Classifications

NAICS Codes

Primary	NAICS Codes	NAICS Title
Yes	**541320**	**Landscape Architectural Services**
	541310	**Architectural Services**
	541330	**Engineering Services**

Product and Service Codes

PSC	PSC Name
C211	**Architect And Engineering- General: Landscaping, Interior Layout, And Designing**
C215	**Architect And Engineering- General: Production Engineering**
C219	**Architect And Engineering- General: Other**

Disaster Response

This entity does not appear in the disaster response registry.

Colorado
Secretary of State
Jena Griswold

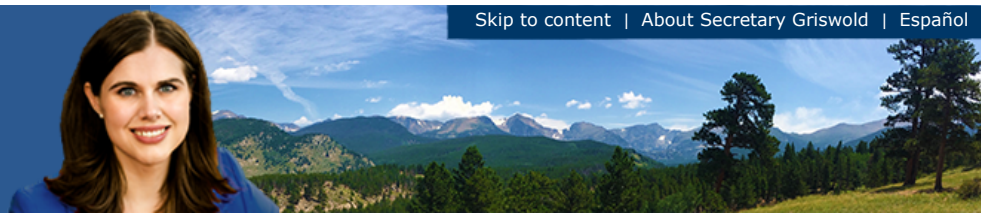

Summary

Details			
Name	Confluence Company, Inc.		
True name	Confluence, Inc.		
Status	Good Standing	Formation date	11/10/2020
ID number	20201969303	Form	Foreign Corporation
Periodic report month	November	Jurisdiction	Iowa
Principal office street address	3457 Ringsby Ct Unit 223, Denver, CO 80216, US		
Principal office mailing address	525 17th St, Des Moines, IA 50309, US		

Registered Agent	
Name	Gary Worthley
Street address	3457 Ringsby Ct Unit 223, Denver, CO 80216, US
Mailing address	3457 Ringsby Ct Unit 223, Denver, CO 80216, US

Filing history and documents

Get a certificate of good standing

Get certified copies of documents

File a form

Set up secure business filing

Subscribe to email notification

Unsubscribe from email notification

Subscribe to text notification

Unsubscribe from text notification

Back

OFFICE OF THE SECRETARY OF STATE
OF THE STATE OF COLORADO

CERTIFICATE OF FACT OF GOOD STANDING

I, Jena Griswold, as the Secretary of State of the State of Colorado, hereby certify that, according to the records of this office,

Confluence, Inc.

is an entity formed or registered under the law of Iowa, has complied with all applicable requirements of this office, and is in good standing with this office. This entity has been assigned entity identification number 20201969303 and has provided the assumed entity name for use in Colorado

Confluence Company, Inc.

This certificate reflects facts established or disclosed by documents delivered to this office on paper through 10/24/2024 that have been posted, and by documents delivered to this office electronically through 10/29/2024 @ 08:34:11 .

I have affixed hereto the Great Seal of the State of Colorado and duly generated, executed, and issued this official certificate at Denver, Colorado on 10/29/2024 @ 08:34:11 in accordance with applicable law. This certificate is assigned Confirmation Number 16514867 .

Secretary of State of the State of Colorado

**********End of Certificate**********

Notice: A certificate issued electronically from the Colorado Secretary of State's website is fully and immediately valid and effective. However, as an option, the issuance and validity of a certificate obtained electronically may be established by visiting the Validate a Certificate page of the Secretary of State's website, https://www.coloradosos.gov/biz/CertificateSearchCriteria.do entering the certificate's confirmation number displayed on the certificate, and following the instructions displayed. Confirming the issuance of a certificate is merely optional and is not necessary to the valid and effective issuance of a certificate. For more information, visit our website, https://www.coloradosos.gov click "Businesses, trademarks, trade names" and select "Frequently Asked Questions."

CITY PARK & ARKANSAS RIVER CORRIDOR MASTER PLAN

REQUEST FOR PROPOSALS

PREPARED FOR CITY OF PUEBLO, COLORADO

SEPTEMBER 5, 2024

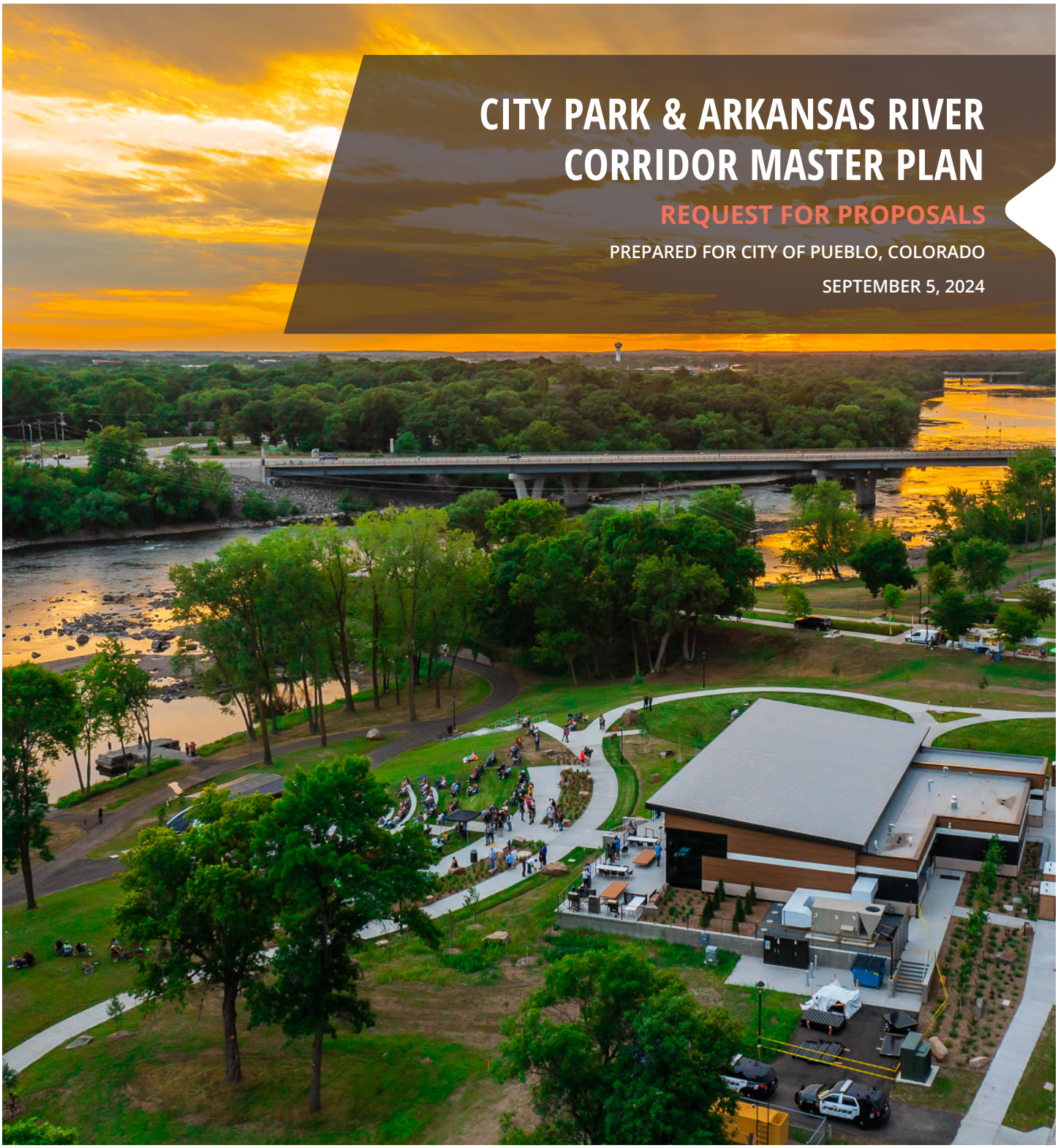

CONFLUENCE

3457 RIngsby Court, Unit 223
Denver, Colorado 80216
WWW.THINKCONFLUENCE.COM

COVER LETTER	SECTION ONE	1
FIRM PROFILE AND PROJECT TEAM	SECTION TWO	3
RELEVANT PROJECT EXPERIENCE	SECTION THREE	14
PROJECT APPROACH	SECTION FOUR	25
PROPOSED TIMELINE	SECTION FIVE	32
ATTACHMENTS AND DOCUMENTATION	SECTION SIX	33

September 5, 2024

Teresa May Burns
Purchasing/Contract Administrator
Parks & Recreation Department
City of Pueblo
230 South Mechanic
Pueblo, Colorado 81003
purchasing@pueblo.us

RE: 24-100 CITY PARK & ARKANSAS RIVER CORRIDOR MASTER PLAN PROJECT

Dear Teresa May Burns and Selection Committee:

Confluence is pleased to provide our team's qualifications to assist the **City of Pueblo** with the preparation of a master plan for the expansion of **Pueblo City Park** along with the integration of the Arkansas River Corridor. Ultimately, this plan will ensure community access and use by a variety of stakeholder groups with a focus on the high bluff along the north edge of City Park that overlooks recent river improvements. This bluff provides an opportunity to establish destination recreation elements that link the historic City Park to the **Arkansas River Corridor** and larger regional trail system. Based on the information provided in the RFP, we have prepared an overview of our firm, team members, project approach with scope of work, and a description of our related project experience.

Confluence is a regional leader in parks and recreation master planning and design. We have the experience and expertise to assist the City of Pueblo through a master planning process that results in solutions that are shaped by site opportunities and informed by stakeholder involvement. Our approach will ensure the creation of designs that are creative, sustainable, and resilient while remaining cost effective, and constructable.

Stakeholder engagement will be a critical component of our project approach. We know the City of Pueblo and are serious about ensuring that we include all stakeholders along with members of the community that are often under-represented. A robust community outreach effort blended with the City's recommendations will influence and drive the master planning effort by building community consensus. The result will be the integration of vibrant, engaging, and authentic ideas to the park and river corridor design, that will bring value to the community of Pueblo.

Statement of Understanding

We understand that our responsibility will be to partner with the City of Pueblo - Parks & Recreation Department to create a new Master Plan for City Park and the adjacent Arkansas River Corridor that will help guide policy and resource decisions for future

Project Goals and Objectives

We understand that the following goals and objectives are critical to providing a successful plan.

- Enhance the corridor for recreation use
- Improve the auto and pedestrian access and circulation related to City Park
- Identify and design City Park and river corridor improvements
- Improve trail access and circulation for pedestrian and bicycle use
- Improved water quality and wildlife habitat in the river corridor
- Identify opportunities for art, culture, and learning in the park and river corridor
- Identify gaps in the trail system and create new linkages to adjacent neighborhoods

- Create rest stations and overlooks along the trail with shade, seating, and information
- Identify remaining river hazards that must be removed to enhance safety measures
- Study abandoned railroad property to determine possible future use
- Identify key access points and improvements – coordinate with 2018 ARL Master Plan
- Evaluate Runyon Lake area and consider recreation improvement

Note: A member of our team prepared the **2018 Arkansas River Levee Master Plan**, while at another firm, which addressed several of these goals and objectives.

Firm Address

Confluence
3457 Ringsby CT, Unit 223
Denver, CO 80216
www.thinkconfluence.com

Primary Contact - Principal, Project Leader and Authorized Firm Representative

Chad Herd, PLA, ASLA
Our team is immediately available to commit the necessary time and resources to this project. We will deliver an inclusive and community supported master plan within the time frame identified. If you have any questions or would like additional information, please contact me at 303.842.0311 or cherd@thinkconfluence.com

Sincerely,

Chad Herd, PLA, ASLA
Confluence Principal

CONFLUENCE | FIRM PROFILE

WHO WE ARE

Confluence is a professional consulting firm comprised of landscape architects, urban designers and planners. Our staff of 75+ includes 40 licensed landscape architects and AICP certified planners—and our firm is comprised of energetic, creative, and passionate people who are involved in making our communities better places to live. We assist our clients on a wide range of public, educational, institutional and private sector projects. Our landscape architects are licensed to practice in Alaska, Arkansas, California, Colorado, Connecticut, Georgia, Kansas, Idaho, Illinois, Iowa, Michigan, Minnesota, Missouri, Montana, Nebraska, New Mexico, Nevada, North Dakota, Ohio, Pennsylvania, South Dakota, Tennessee, Texas, Utah, Wisconsin, and Wyoming—and this list continues to grow to meet our clients' needs.

WHAT WE DO

Simply stated—we create places full of life. The diversity of our work and expertise has become a hallmark of our firm, and it's a big reason why our clients engage us again and again to help establish their next creative vision for the future. We offer a wide array of design and planning capabilities, handling everything from stakeholder and community engagement activities, to crafting urban design and community planning solutions, to representing our clients during construction implementation. With over twenty years of award-winning experience and hundreds of completed projects, Confluence has shaped the practice of landscape architecture, planning and urban design across the Midwest, and we love what we do. *What can we do for you?*

HOW WE WORK

Our creative process is focused on collaboration and insightful interaction with our clients, consultants and the community in which we work. We begin by gaining an insightful and objective understanding of each project, including how it fits into the surrounding context. From vision to completion, our team excels in collaborating to shape and achieve your "what's next"—while also planning ahead on your long-term strategy. The diversity of our practice and professional experience provides a solid framework upon which to build successful strategies for achieving our client's goals.

LOCATIONS

DENVER
3457 Ringsby Court, Unit 223
Denver, Colorado 80216
303.433.7100
thinkconfluence.com

Des Moines
Sioux Falls
Kansas City
Cedar Rapids
Minneapolis
Omaha
Fargo
Chicag

CREATING SPACES FOR PEOPLE

THE PRESENCE OF HUMAN BEINGS IS THE LIFEBLOOD OF ANY SUCCESSFUL PROJECT

While some designers primarily focus on the aesthetics of geometry, objects, and materials, our ethos is that in the absence of human activity, even a beautiful space can be a failed space. We pride ourselves on not being object-oriented, but subject-oriented, designers. We are students of interpersonal dynamics and urban social life who use that knowledge to create places designed for human enjoyment.

What we've learned is that people vote with their feet and that the mark of a great space is the presence of human beings. A cool-looking space may get people to visit once out of novelty, but a space designed not only to invite people, but give them a reason to keep coming back, creates vibrant places that transform our cities. We believe designing settings that encourage fortuitous human interaction and provide opportunities to gather are the best way to attract and retain tenants, employees, customers, and visitors.

WATER TRAIL PLANNING & DEVELOPMENT

SPECIALIZED DESIGN TO CONNECT PEOPLE WITH RIVERS

Designing water trails – or paddling routes on rivers – requires a special skill set. Both to understand how paddlers use and access the water's edge, but also to understand what paddlers need to move across 10 river miles or more on a float trip. Iowa has one of the most widely used state water trail design guidelines. Mimi Wagner, now with Confluence, led development of Iowa's river access design standards and created the state's Master Plan for State Water Trails in 2010. The National Park Service has adopted some of Iowa's standards in their best management practices toolbox. Mimi has gone on to apply these standards on 10 State Water Trail Master Plans for Iowa rivers, each for up to 90 river miles of distance.

As Greeley contemplates physically reconnecting with the Poudre River, care is needed to understand the City's goals in terms of the type of access desired. Universal Design of river accesses is a current trend among cities. ADA standards do not exist for river access design, yet many people are unable to traverse traditional boat launch facilities. due to age or ability . . . Universal Design standards similar to what Iowa has done offer the best hope to allow people with physical limitations to reach the water whether to fish, kayak or simply watch the water. And beyond the access needs for people and boats, a river access point needs to be located at a point on the river where it will be resilient and withstand damage in high flows.

An important part of engagement on these projects is collaboration with local emergency management, law enforcement, and future recreational users of the river. Confluence staff have experience leading these important steps:

- Successful water trails require that local first responders know how to locate paddlers in trouble, how to navigate to their location, and that they have the equipment and training needed to rescue and recover.
- State laws governing river ownership can be critical information to both understand when master planning for a water trail as well as communicate to river users.
- Understanding how people who paddle and fish locally and are likely to use the Poudre River in the future are incredibly important stakeholders.

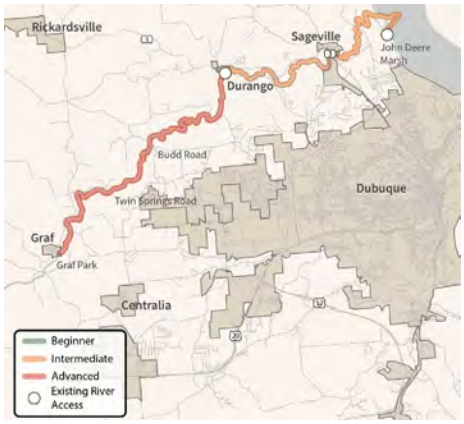

KEY STAFF AVAILABILITY

All key staff indicated in the organization chart have the capacity and availability in their schedules to begin work on your project immediately. While there will likely be additional staff involved in a supportive role on this project, the key team members listed will be involved throughout the duration of the project. By selecting Confluence, you are selecting a team with 9 offices and a staff of over 75+ people. We have a long history of meeting project timelines and are dedicated to meeting all of your schedule needs and project expectations and will staff this project as needed. As we move through contracting with the City on this project, and better understand the potential scope, Confluence can add additional subconsultants to our team as needed to meet the City's needs. We collaborate often with various disciplines including architecture, civil engineering, structural engineering and more. Note, that members of our team have worked with Gary Lacy of Recreation Engineering & Planning on similar projects in the past.

CONFLUENCE

Chad Herd PLA, ASLA
Principal + Project Leader

Gary Worthley, ASLA, PLA
Principal- in- charge

Wm. Christopher Cline, ASLA, PLA
Design Principal

Mimi Wagner ASLA, PLA
River Trail Specialist

Daniel Beckerdite PLA, ASLA
Associate - Project Landscape Architect

Bennett Rindy, ASLA
Project Design & Graphic Support

Claire Hilton ASLA
Project Support

SIOUX FALLS RIVERFRONT AMPHITHEATER

CHAD HERD, PLA, ASLA
PRINCIPAL + PROJECT LEADER

Chad Herd will be the project design lead and project manager for the Confluence Team. He has a legacy of great design work in the City of Pueblo. He was involved in several stages of the Historic Arkansas Riverwalk of Pueblo (HARP) project, leading design and implementation efforts on many of the prominent areas of the riverwalk. More recently, in 2018, Chad prepared a conceptual master plan for the treatment of the Arkansas River Levee just south of Downtown in the heart of Pueblo. This effort was in concert with the lowering of the levee, which was a several-year engineering project. Chad's efforts to assess the river corridor and adjacent trail to determine appropriate areas for access and activity were documented in a summary master plan document. The focus of this project was just to the east of the current project below and to the north of City Park. Another critical part to the Arkansas River Levee Master Plan was the stakeholder engagement effort. Chad led a stakeholder outreach effort which included a variety of user groups from activities such as kayaking, river surfing, fishing, hiking, cycling and more within the corridor. The public open houses were well attended, and the stakeholder input helped shape the concepts and create community connections to the regional trail system.

CURRENT + NOTABLE PROJECT EXPERIENCE

Arkansas River Levee Master Plan / Pueblo, Colorado

Historic Arkansas Riverwalk of Pueblo (HARP) / Pueblo, Colorado

Bear Creek Master Plan / Medford, Oregon

Sioux Falls Greenway & Riverfront Master Plan / Sioux Falls, South Dakota

Estes Park West Corridor Master Plan / Estes Park, Colorado

El Parque del Rio / Santa Fe, New Mexico

Dakota Ridge – Skyline Open Space / Loveland, Colorado

Boulder Reservoir / Boulder, Colorado

- Visitor's Service Center
- South Shore Site Management Plan

Boettcher Outdoor Education Center – HARP / Pueblo, Colorado

Clear Creek Corridor / Golden, Colorado

Barr Lake State Park - Nature Center / Brighton, Colorado

Staunton State Park / Pine, Colorado

- Master Plan
- Phase One
- Phase One Trails

Colorado Parks & Wildlife Office Relocation / Fort Collins, Colorado

Echo Bluff State Park / Eminence, Missouri

Barnes Softball Complex / Loveland, Colorado

Florence Recreation Complex / Florence, Colorado

Performance Park / Estes Park, Colorado

The Commons, Park Block I & II / Medford, Oregon

HARP Gateway Park / Pueblo, Colorado

PROFESSIONAL EXPERIENCE
35+ Years of Experience

EDUCATION
BLA – Landscape Architecture,
Kansas State University, 1988

PROFESSIONAL + CIVIC AFFILIATIONS

Licensed Landscape Architect:
Colorado / #369
Kansas / #646

CLARB Certification

American Society of Landscape Architects / Colorado

Partnership – Emerging Leaders / Alumni Inaugural Class of 2004

Instructor "Advanced Landscape Architectural Graphics"
University of Colorado- Denver
(2002-2005)

GARY WORTHLEY, ASLA, PLA

PRINCIPAL- IN- CHARGE

Gary is the managing principal of our Denver office. He has more than 25-years of experience designing and implementing projects in Colorado and throughout the Western United States. He brings his imaginative approach to problem-solving together with a knack for developing creative solutions to unique challenges and circumstances.

SELECT HONORS + AWARDS

Merit Award, ASLA for Planning, Staunton State Park, Pine, Colorado

Merit Award, ASLA for Excellence in the Study of Landscape Architecture

Merit Award, American Planning Association, Utah Chapter, A Study in Rural Community Planning

Certificate of Appreciation, US Department of Agriculture, Santa Fe National Forest

Certificate of Appreciation, United States Department of Agriculture – Santa Fe National Forest

CURRENT + NOTABLE PROJECT EXPERIENCE

Ridgeway State Park / Ridgeway, Colorado

Eldorado Canyon State Park / Eldorado Springs, Colorado

Roxborough State Park / Roxborough, Colorado

Staunton State Park / Pine, Colorado

- Master Plan; Visitor Center; Phase 1; Phase 2; Phase 3; Trails Phase 1; Trails Phase 2; Trails Phase 3

Sweetwater Lake Master Development Plan / Garfield County, Colorado

Paako Ridge / Sandia Park, New Mexico

- Master Plan; Key Lodge; Pro Shop; Golf Amenity Clubhouse; Cart Barn; Day Spa; Member Spa

Snowmass Base Village / Snowmass Village, Colorado

Viceroy Hotel / Snowmass Village, Colorado

Westin Hotel / Snowmass Village, Colorado

Wildwood Hotel / Snowmass Village, Colorado

Boyne Highlands (Multiple Phases) / Harbor Springs, Michigan

Edgemont / Steamboat Springs, Colorado

Altis / Mammoth Lakes, California

Village at Wolf / Wolf Creek, Colorado

Jacks Creek Campground / Santa Fe National Forest, New Mexico

Jemez Creek Campground , Santa Fe National Forest, New Mexico

Gondola Square / Steamboat Springs, Colorado1

Thunderhead / Steamboat Springs, Colorado

Copper Mountain Village / Copper Mountain, Colorado

EverVail / Vail, Colorado

PROFESSIONAL EXPERIENCE
26 Years of Experience
6 Years with Confluence

EDUCATION
Utah State University: Master of Landscape Architecture / 1995

Kansas State University: Bachelor of Landscape Architecture / 1993

PROFESSIONAL REGISTRATIONS
Licensed Landscape Architect:
- Alaska / #207408
- Arizona / # 75134
- California / #4913
- Colorado / #247
- Connecticut / LAR-0001642
- Idaho / #16790
- Montana / #19985
- Michigan / #3901001688
- Nevada / #629
- New Mexico / #613
- Oklahoma / # la08054
- Utah / #349762
- Wyoming / #0061C

PROFESSIONAL REGISTRATIONS

American Society of Landscape Architects / Colorado Chapter

WM. CHRISTOPHER CLINE, ASLA, PLA
DESIGN PRINCIPAL

Chris is one of our most talented design principals and will be involved during the early design process to ensure the generation of exciting and unique design ideas. Chris brings over 30+ years of solid urban design and planning experience to the firm, and enjoys collaborating with multi-disciplinary teams. He continually seeks creative solutions, and is adept in building consensus through community involvement. His work has included corridor planning and aesthetics, land planning, urban design, and community revitalization. Chris provides project design and planning oversight and attends key meetings. As the project develops, he will provide input and direction at each stage of the project.

PROFESSIONAL + CIVIC AFFILIATIONS

ASLA Prairie Gateway Chapter / 1990 to Present

- President / 2017 to 2019

TIF Commission, City of Parkville, Missouri / 2017 to 2019, 2021 to Present

Urban Land Institute / 2005 to Present

- Membership Committee Chair / 2014 to 2016
- Programs Committee Chair / 2011 to 2014, 2020 to Present
- Chair of Mission Advancement / 2011 to 2013
- Management Committee Member / 2011 to 2016

American Planning Association / 2017 to Present

Downtown Council of Kansas City / 2001 to Present

- Infrastructure Committee / 2008 to Present
- Parking + Transportation Committee / 2001 to 2005

Kansas City, Kansas Downtown Shareholders, Board of Directors / 2008 to 2014

Northland Redevelopment Partners, Clay County EDC / 2004 to 2006

Neighborhood Housing Services of Kansas City, Board of Directors / 1997 to 2000

Astor Place Homes Association, Founding President / 1994 to 1997

CURRENT + NOTABLE PROJECT EXPERIENCE

E H Young Riverfront Park / Riverside, Missouri

Highland Bridge - Ford Site Redevelopment / St. Paul, Minnesota

Riverwalk Master Plan / St. Cloud, Minnesota

Metro Blue - KC Riverfront Recreation Study / Kansas City, Missouri

Linden Square Amphitheater / Gladstone, Missouri

Linking Historic Shawnee: A Multi-modal Downtown Connectivity Plan - MARC Creating Sustainable Places / Shawnee, Kansas

A New Look at Old Town Downtown Revitalization Study - MARC Creating Sustainable Places / Lenexa, Kansas

Rock Island Corridor Study - MARC Creating Sustainable Places / Raytown, Kansas City, Lee's Summit, Greenwood and Pleasant Hill, Missouri

Kettlestone (Grand Prairie Parkway Corridor) Master Plan + Design Guidelines / Waukee, Iowa

EXPERIENCE
30 Years of Experience
14 Years with Confluence

EDUCATION
Kansas State University:
Bachelor of Landscape Architecture

REGISTRATIONS
Licensed Landscape Architect:
Missouri / #191
Kansas / #548

MIMI WAGNER, ASLA, PLA
RIVER TRAIL SPECIALIST

Mimi's project work focuses primarily on design and planning related to natural resources and people, particularly water. Her background in education and research provides ready skills in public engagement and communication at many different scales from neighborhoods to an entire state. Mimi has experience in the field were she provided professional services in Iowa over four years for work related to dam mitigation, stream restoration, river planning, and river edge infrastructure design. She also worked in education at Iowa State University as an Associate Professor of Landscape Architecture; Graduate Program Director of Sustainable Environments Developed curriculum and taught undergraduate and graduate landscape architecture courses in social and behavioral factors, ecological design, regional design, soils and earthwork, stormwater management, community design.

CURRENT + NOTABLE PROJECT EXPERIENCE

State Water Trail Plans*:

- Upper North Raccoon River Water Trail Plan / Buena Vista, Sac, Calhoun counties, Iowa
- Dubuque County Water Trails Plan / Dubuque County, Iowa
- West Nishnabotna River Water Trail Plan / Shelby County, Iowa
- West Fork Des Moines River Water Trail Plan / Emmet County, Iowa
- Lower Des Moines River Water Trail Plan / Van Buren County, Iowa
- Iowa River Water Trail Plan / Johnson and Louisa Counties, Iowa
- Maquoketa River Water Trail Plan / Delaware County, Iowa
- Skunk River Water Trail Plan / Story County, Iowa
- West Nishnabotna River Water Trail Plan / Pottawattamie County, Iowa

River Front Park Motor Boat and Kayak Ramps / Keosauqua, Iowa*

Midway River Access / Emmet County Iowa*

Riverside Park ADA Fishing Pier, Universal Design Boat Ramp, and Trail Design / Estherville, Iowa*

Little Walnut Creek Stabilization & Trail Construction / Clive, Iowa*

Priest Ravine Remediation / Pleasant Hill, Iowa*

Fort Sheridan Lakeshore Preserve Bartlett Ravine Stream Daylighting / Highland Park, Illinois*

Jester Park Skull Pond Rehabilitation / Granger, Iowa*

Lake Restoration Diagnostics Studies – Watershed Social Assessment

- Easter Lake Watershed / Des Moines, Iowa*
- Clear Lake Watershed / Clear Lake, Iowa*
- Lizard Lake Watershed / Pocahontas County, Iowa*
- Lower Gar chain of lakes Watershed / Dickinson County, Iowa*

Lake LaVerne Vegetated Floating Islands / Ames, Iowa*

Municipal Comprehensive Stream Assessment / Ames, Iowa*

College Creek Restoration and Grant Writing / Ames, Iowa*

** work performed while employed by another firm*

PROFESSIONAL EXPERIENCE

30+ Years of Experience

EDUCATION

Iowa State University: Bachelor of Landscape Architecture

Iowa State University: Master of Landscape Architecture II

PROFESSIONAL REGISTRATIONS

Licensed Professional Landscape Architect:

- Iowa / #267

PROFESSIONAL + CIVIC AFFILIATIONS

American Society of Landscape Architects, Prairie Gateway Chapter

Emerita Associate Professor of Landscape Architecture, Iowa State University / 2021 to Present

Iowa Floodplain and Stormwater Management Association / 2020 to Present; Board Member 2023 to Present

Story County Soil and Water Conservation District Assistant Commissioner / 2010 to Present

American Society of Landscape Architects Iowa Chapter / 1984 to Present

DANIEL BECKERDITE, ASLA, PLA

ASSOCIATE + LANDSCAPE ARCHITECT

Daniel has nearly 20 years of experience taking projects from concept to implementation in Colorado and the West. During this time he has managed a variety of project types from mountain resorts to parks and trails.. He has worked on projects through all phases of development including conceptual design through construction documentation and has extensive experience with construction administration.

CURRENT + NOTABLE PROJECT EXPERIENCE

Altis / Mammoth Lakes, California

Boyne Highlands / Harbor Springs, Michigan

Edgemont / Steamboat Springs, Colorado

Mile High Greyhound Park Redevelopment / Commerce City, Colorado

EverVail / Vail, Colorado

Lone Rock Ranch / Bailey, Colorado

10th Street Townhomes / Denver, Colorado

Jason Street Townhomes / Denver, Colorado

Gondola Square / Steamboat Springs, Colorado

Limelight Hotel / Ketchum, Idaho + Snowmass Village, Colorado

Lionsback Resort (Multiple Phases) / Moab, Utah

Mammoth View / Mammoth Lakes, California

Mammoth Crossing / Mammoth Lakes, California

Mayflower Base Village / Park City, Utah

Arrowhead Nordic Spa / Littleton, Colorado

Mountain Village Hotel / Telluride, Colorado

North Day Lot / Vail, Colorado

One Snowmass / Snowmass Village, Colorado

Paako Ridge / Sandia Park, New Mexico

River Run Hardscape and Snowmelt / Keystone, Colorado

Ski Time Square / Steamboat Springs, Colorado

Snowmass Base Village / Snowmass Village, Colorado

South Hotel and Residence / Mammoth Lakes, California

Thunderhead / Steamboat Springs, Colorado

Vail Marriott Redevelopment / Vail, Colorado

Ridgway State Park / Ridgway, Colorado

Eldorado Canyon State Park / Eldorado Springs, Colorado

Viceroy Hotel / Snowmass Village, Colorado

Roxborough State Park / Roxborough, Colorado

Village at Wolf Creek / Wolf Creek, Colorado

Westin Hotel / Snowmass Village, Colorado

Westin Monache / Mammoth Lakes, California

PROFESSIONAL EXPERIENCE
19 Years of Experience
6 Years with Confluence

EDUCATION
Kansas State University
Bachelor of Landscape Architecture / 2004

Kansas State University
Natural Resources and Environmental Sciences / 2004

PROFESSIONAL REGISTRATIONS
Licensed Landscape Architect
Colorado / #786

PROFESSIONAL + CIVIC AFFILIATIONS
American Society of Landscape Architects / Colorado Chapter

BENNETT RINDY

PROJECT DESIGN & GRAPHIC SUPPORT

Bennett is a talented designer that was drawn to landscape architecture to positively impact the quality of people's lives. He is a design leader that pushed innovative design solutions. Additionally, Bennett is also enthusiastic about design representation through graphics and visualization.

CURRENT + NOTABLE PROJECT EXPERIENCE

1001 NP Site Design & Rooftop Amenity / Fargo, North Dakota

1350 Sheridan / Denver, Colorado

26th and Alcott / Denver, Colorado

76th Avenue South Corridor Study / Fargo, North Dakota

Anne Carlsen Center - Pathways / Jamestown, North Dakota

Antique Building / Fargo, North Dakota

Nordic Spa / Littleton, Colorado

Block 9 Streetscape / Fargo, North Dakota

Boyne Highlands - Pool Area / Harbor Springs, Michigan

Boyne Highlands Spa Redesign 2022 / Harbor Springs, Michigan

Itterman Residence-Additional Services / West Fargo, North Dakota

City of St. Cloud Rendering Services / St. Cloud, Minnesota

FM Rotary Natural Playground / Fargo, North Dakota

Detroit Mountain Rec Area-Natural Playgr / Detroit Lakes, Michigan

Creighton University: Campus Master Plan / Omaha, Nebraska

Mercantile Rooftop / Fargo, North Dakota

North 24th Street Streetscape - Bid / Omaha, Nebraska

Downtown Moorhead Master Plan / Moorhead, Minnesota

Memorial Highway - Addtional Svcs - Ph1 / Mandan, North Dakota

Merhiy Residence / Fargo, North Dakota

Fort Peck-Rendering Services / Fort Peck, Montana

CPW Cameo Project - Pallisade, Colorado / Pallisade, Colorado

Lionsback Resort Phase - Casitas / Moab, Utah

Lone Rock - Village 2 / Los Altos, California

Fargo Sports Complex / Fargo, North Dakota

Red Lake Charter School / Red Lake, Minnesota

Creighton Fundraising Materials / Omaha, Nebraska

MAC Spine Connectivity Project / Council Bluffs, Iowa

Mayflower / Park City, Utah

Ferguson Residence / Boulder, Colorado

Breckenridge Double Tree Hotel / Breckenridge, Colorado

Lionsback Resort Phase II / Moab, Utah

PROFESSIONAL EXPERIENCE

5 years of Experience

5 years with Confluence

EDUCATION

North Dakota State University, MLA, Landscape Architecture / 2022

North Dakota State University, BS, Environmental Design / 2021

CLAIRE HILTON
PROJECT SUPPORT

Claire's appreciation for the natural world began at a young age. She spent her childhood exploring nature and forming relationships with the various forms and niches of Michigan's Upper Peninsula.

She has since had the opportunity to travel and live in other locations across the country, including Colorado, New York, California, and Minnesota. Claire finds inspiration in exploring other cultures and observing her surroundings. Claire exhibits her creativity through the creation and curation of art, fashion, figure skating, and contemporary trends.

PROFESSIONAL + CIVIC AFFILIATIONS

American Society of Landscape Architects / Colorado Chapter

CURRENT + NOTABLE PROJECT EXPERIENCE

8100 W 10th Ave / Lakewood, Colorado

Westin Hotel / Sacramento, California

Sweetwater/ Sweetwater Lake, Colorado

"We Don't Waste"/ Denver, Colorado

Frederick Parks Master Plan / Frederick, Colorado

PROFESSIONAL EXPERIENCE
2 Years of Experience
< 1 Year with Confluence

EDUCATION
University of Minnesota- Twin Cities : Master's Degree in Landscape Architecture/ 2023

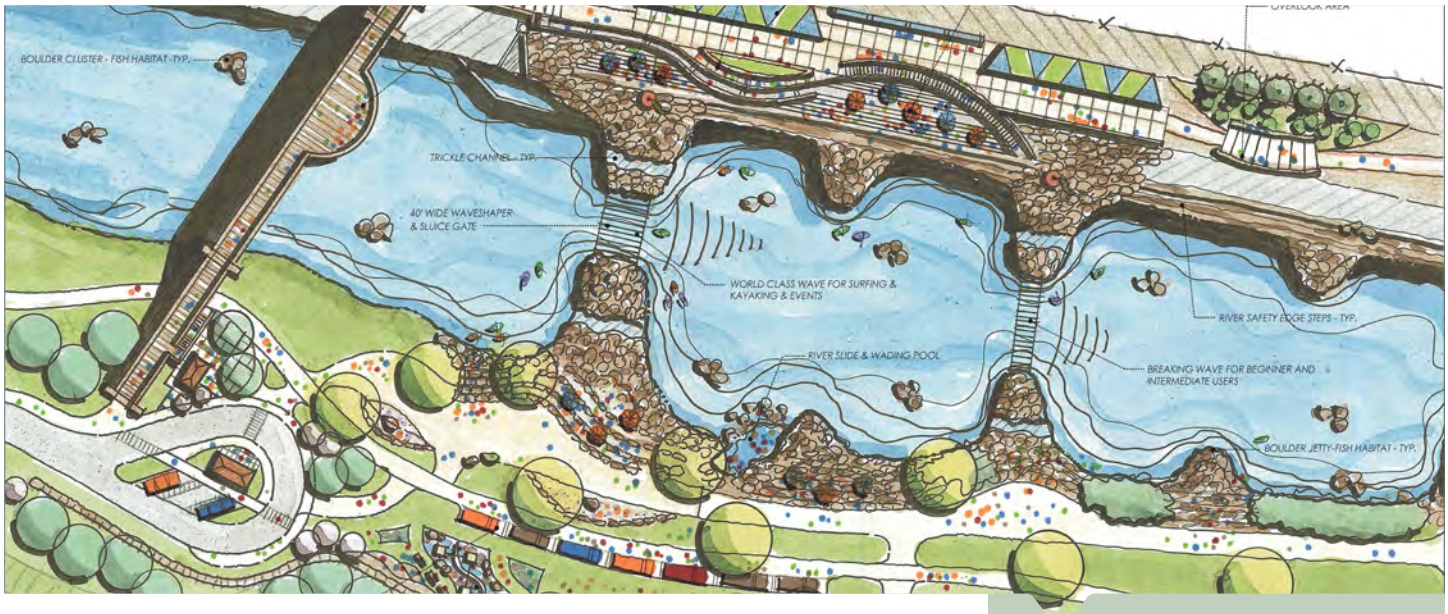

ARKANSAS RIVER LEVEE MASTER PLAN

This Plan is a valuable guide for developing the river corridor over time based on input from a variety of recreation user groups and community stakeholders in collaboration with City leadership.

In 2017, the City of Pueblo and the Pueblo Conservancy District championed an effort to provide a master plan for the 2.75-mile stretch of the Arkansas River Flood Levee adjacent to Historic Downtown Pueblo. The process was initiated in response to ongoing work to lower the existing Levee in this area, noted for its popular whitewater course and engaging murals. The intent of the proposed planning effort was to develop a vision for the corridor that would increase community focus on active river recreation, improve connectivity to the river, improve the ecology of the river, and increase economic development opportunities. The City invested in a comprehensive planning process that assessed the opportunities and challenges of this urban river park. The result is a valuable guide for developing the corridor over time based on input from the general public, City agencies, specific user groups and other stakeholders. This plan highlights opportunities and strategies that have helped guide policy and resource decisions by City leadership over the past several years.

Note: Chad Herd led the planning process and wrote this master plan as a sub-consultant to Northstar Engineering, while working for another firm.

PROJECT DETAIL

Location
Pueblo, Colorado

Client
City of Pueblo and the Pueblo Conservancy District

Contact
Steven Meier
Director of Parks & Recreation
City of Pueblo
719-553-2790
smeier@pueblo.us

Status
Master Plan was finalized in 2018 - Part of the plan have been implemented and some items are still planned for implementation

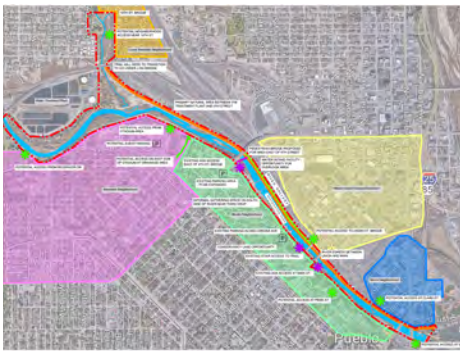

SAUK RAPIDS RIVERFRONT PARK IMPLEMENTATION

The Sauk Rapids Riverfront Park focuses on a strategy to encourage residents and visitors alike to reconnect with the Mississippi River and nearby downtown Sauk Rapids.

This revitalization effort intends to serve the local and regional community by providing many programming opportunities that will engage and attract many user types to the site inviting the community to congregate, socialize, play and relax.

Confluence led the visioning of the riverfront park, building intent and program, as well as the public engagement process in partnership with the City of Sauk Rapids. The riverfront park includes an event center venue, performance amphitheater, event lawn space for community events, recirculating sequencing interactive water feature, small gathering venue, river engagement and touchpoints, native restoration and the adaptive reuse of granite outcropping. The Mississippi will regain its value as a focal asset for the community and the riverfront park will become a part of the city's identity as well as a regional attraction.

PROJECT DETAIL

LOCATION

Sauk Rapids, Minnesota

CLIENT

City of Sauk Rapids

Size

N/A

PROJECT START / COMPLETION DATE

Fall 2018 - Summer 2022

CONTACT

Ross Olson
City Administrator
320.258.5302
rolson@ci.sauk-rapids.mn.us

BUDGET - CONFLUENCE FEE ONLY

~ $233,000

HIGHLAND BRIDGE

Confluence is leading a collaborative design process for all public realm plazas, parks, open spaces and green infrastructure for the most sustainable development in Minnesota's history.

The fabric of this 120+ acre mixed-use development is stitched together with over 55 acres of green space, bike and pedestrian paths, green infrastructure elements, and recreation facilities. Confluence is leading a collaborative team to develop a network of landscape spaces that provide environmental, economic and social benefits to the new development and surrounding neighborhoods.

The green spaces create the soul of the new neighborhoods and are derived from the historic traditions of St. Paul's parks, the natural landscape and bedrock foundations of the site, and the unique history of the historic Ford Assembly Plant. Native vegetation, bioengineering, advanced green infrastructure, native limestone reuse, and water are the primary building blocks of the innovative landscape. A variety of flexible public spaces create dynamic opportunities for gathering, celebrations, and events that are integrated with transit and regional bike trails. A network of distinct and varied landscapes are connected by accessible paths that promote health and active living now and into the future.

PROJECT DETAIL

LOCATION

St. Paul, Minnesota

CLIENT

Ryan Companies

SIZE

55+ acres parks & open space

PROJECT START / COMPLETION DATE

Spring 2020 - Winter 2023

CONTACT

Colin Barr
President North Region
Ryan Companies US, Inc.
612.492.4376
Colin.barr@ryancompanies.com

BUDGET

$1.2 Million

DOWNTOWN RIVER GREENWAY PHASE III

On the former industrial site of Sioux Steel, the greenway phase three project creates a public riverfront plaza on the west bank of river in a spot not previously accessible to the public. With views overlooking the upper falls of Falls Park and the historic Queen Bee Mill ruins, the park provides the connective link between the new Steel District development, Falls Park, the Levitt amphitheater, the greenway bike trail network and greater downtown.

Phase Three of the downtown river greenway project expands the pedestrian connectivity and recreational corridor from earlier phases, with a focus on embracing and interacting with the city's namesake river and falls. A lower path stretches along the river's edge, while an upper plaza provides a small dog park, a park shelter, gathering spaces and ample seating for larger gatherings. A mix of modern site furnishings allow for flexible use of the plaza. Adjoining a new hotel, mixed use housing and office spaces, the greenway blends seamlessly with the adjacent developments. Project construction also includes replacement of a deteriorating dam that crosses the river in this location. Replacement of the dam will allow the City to maintain the water elevation throughout all of downtown, to support water recreation and improved river aesthetics.

Confluence was hired for design development through construction documents and construction administration for the project. The $15 million park project is anticipated to be completed and will open to the public in the early summer of 2025.

PROJECT DETAIL

LOCATION

Sioux Falls, South Dakota

CLIENT

City of Sioux Falls, South Dakota

SIZE

3.5 acres

PROJECT START / COMPLETION DATE

Spring 2018—Ongoing

CONTACT

Mike Patten
Parks Development Specialist
City of Sioux Falls
605.367.8221
MPatten@siouxfalls.org

BUDGET

$15 Million

DANIEL MORGAN BOONE PARK WATERSHED GREEN INFRASTRUCTURE INITIATIVE

This initiative is Kansas City's largest green infrastructure project to date, and represents a strategic opportunity to address the community's storm water needs while also enhancing use of existing parks and open space areas.

In collaboration with a multi-disciplinary team, we are exploring a variety of solutions to address existing area flooding and combined sewer overflows through the introduction of contructed wetlands, bioswales, raingardens, restoration of native habitat, and other storm water mitigation measures. These renderings represent a collection of conceptual ideas our team is exploring, including the potential to create new trails for community connectivity and new park amenities integrated into the design of these green infrastructure features.

PROJECT DETAIL

LOCATION

Kansas City, Missouri

CLIENT

Subconsultant to Black & Veatch for The City of KCMO

PROJECT START / COMPLETION DATE

Spring 2023 - Summer 2024

CONTACT

Wes Minder
Director: KC Water
816.513.1360
wes.minder@kcmo.org

BUDGET - CONFLUENCE FEE ONLY

~$348,000

RIVERFRONT CROSSINGS PARK

This park has transformed the site of the City's former wastewater treatment facility into an open space and community connector providing a variety of experiences for its many users.

The project began with our team revising a prior Master Plan for the site to better define the proposed civic and recreational spaces within the park, while celebrating its connection to the City. Confluence led an multi-disciplinary team through multiple phases of design and construction, resulting in a community park that serves as a regional destination. Serving dual purposes, the design approach provides an active recreation and entertainment venue while also offering ample open space for the Iowa River and Ralston Creek to rise during flood season.

PROJECT DETAIL

LOCATION

Iowa City, Iowa

CLIENT

City of Iowa City Parks and Recreation Department

SIZE

20 acres

PROJECT START / COMPLETION DATE

Spring 2015 -Summer 2019

CONTACT

Juli Seydell Johnson, Director of Parks and Recreation
319.384.3331
juli-sjohnson@iowa-city.org

BUDGET

$730,000

FRED RICHARDS NATURE + ECOLOGY PARK MASTER PLAN

Listening to the community and collaborating with City staff, a visionary master plan was created to transform a nine-hole municipal golf course into a nature-based community park.

Confluence led a team to develop a precedent-setting project that integrates over 15 acres of restored wetland banking, 30 acres of prairie and wetland plantings, and extensive pathway to play loops focused on ecology, learning, and outdoor activities. Other elements include unique natural playground elements, the existing clubhouse retrofitted into a multi-use park building with a beer garden, a series of learning spaces, a regional bicycle trailhead and a multi-use community field. Confluence also facilitated numerous community open houses, stakeholder meetings and surveys to collect input from over 1,500 residents and related agencies. Our team undertook an extensive research-based exploration of the site's history, the community's values, and related planning studies and environmental analysis that informed the resulting design recommendations. Additionally, we utilized a company-wide charrette to generate ideas and a vision for the park. Representatives from all offices contributed and three distinct concepts were developed, tested with the public, and refined to one preferred master plan moving forward.

PROJECT DETAIL

LOCATION
Edina, Minnesota

CLIENT
City of Edina Parks and Recreation

SIZE
45 acres

PROJECT START / COMPLETION DATE
07/01/2022 - Ongoing

CONTACT
Ann Kattreh, Director of Parks and Recreation Department
952.826.0430
akattreh@edinamn.gov

BUDGET
TBD

MILE HIGH GREYHOUND PARK REDEVELOPMENT

A former greyhound racing track finds new purpose in the hear of Commerce City

The 65-acre redevelopment takes a comprehensive approach to urban infill, featuring a variety of housing typologies & retail alongside a large central park space. Design of the park considers the immediate needs of the future surrounding residents, while also looking to fill gaps in the wider recreation network of Commerce City.

The park's design supports passive and active programming, including walking paths, gardens, flexible open lawns, recreation courts, and play opportunities. Also included in the park's design is integrated flood storage, capturing and storing runoff from the park and surrounding housing development.

PROJECT DETAIL

LOCATION
Commerce City, Colorado
CLIENT
Delwest
SIZE
3.5 acres
PROJECT START / COMPLETION DATE
Fall 2019 - Spring 2022
CONTACT
Joe Delzotto
President/ / CEO of Delwest
Jad@delwest.com
BUDGET
~$3 Million

WILDER BLUFF PARK

Confluence was engaged by the City of Shawnee to work to envision a unique and captivating concept for their new 40-acre park in the western portion of the city.

The Confluence team worked with city staff to develop a public outreach plan to engage the surrounding residents and school-aged children in the envisioning of how the park could be developed. Using a series of public input sessions as well as a "Plan the Park" workshop with the neighboring elementary school, our team developed a palette of thoughts and ideas to work from to inform the design. The Master Plan includes and winding park entry drive which passes through the "Bluffs" by the park "green" into the heart of the park, and a water play area where children can engage with two water streams and boulders that send water into the air for the children to frolic in. Adjacent to the water play is a tree top playground where the user can climb into the rope tunnels, pass over the pathway below and be in the canopy of the existing trees and then slide out of the structure in the existing wooded area. A park shelter, complete with a wood burning fireplace and restroom is provide for the visitors use. A series of BMP's capture the storm water allowing it to naturally filter back into the water table.

PROJECT DETAILS

LOCATION
Shawnee, Kansas
CLIENT
City of Shawnee
SIZE
40 acres
PROJECT START / COMPLETION DATE
Summer 2019- Summer 2021
CONTACT
Tonya Lecuru, Parks and Recreation Director
tlecuru@cityofshawnee.org
913.742.6402
BUDGET
$4 Million

FM ROTARY NATURAL PLAYGROUND

This whimsical four-season playground will use boulders, trees, shrubs, logs, rocks and water to provide open-ended, physically challenging and unstructured play opportunities.

The playground will be as enticing for a child to play in as it is aesthetically beautiful to the community, where children will challenge every part of their mind, body and spirit, through play. The natural playground has programmed activities for all seasons of the year and brings fun and enjoyment to long winters. This project also envisions building a bike skills park to instill confidence in children and helps develop balance, strengthens muscles, and the heart and lungs. Bike skills parks are playgrounds for bikers that include a variety of natural obstacles such as rocks and logs, imaginatively created features such as land ladder bridges, teeters, and dirt jumps all collected in a small and easily accessible location.

PROJECT DETAIL

LOCATION

Moorhead, Minnesota

CLIENT

The Rotary Foundation of Fargo-Moorhead

PROJECT START / COMPLETION DATE

Spring 2020 - Summer 2024

CONTACT

Heather Ranck -
District 5580 Club #317
Fargo, North Dakota 58107
Harank@yahoo.com

BUDGET

~ $1.2 Million

E.H. YOUNG RIVERFRONT PARK

Serving as a primary community park within the Riverside Park System, the plan for this park anticipates its transformation into a destination for visitors from the Kansas City metropolitan area.

Originally constructed nearly 25 years ago, this park is known for its Riverwalk and its presence along the Missouri River. River movements, road access reconfigurations and the facility's age all contributed to the desire for a new master plan. Confluence led a design team comprised of park planners, ecologists, river hydrologists and urban designers to guide the creation of a new master plan.

The community has been energized and engaged in developing the direction of this new plan, which confirmed the importance of water-oriented activities, a collection of social gathering spaces, a destination playground, habitat restoration and natural landscape areas. Our team was also engaged to prepare a project phasing strategy and to prepare construction plans for the first phase of park revitalization.

PROJECT DETAIL

LOCATION

Riverside, Missouri

CLIENT

City of Riverside

SIZE

25.5 acres

PROJECT START / COMPLETION DATE

Fall 2017—Summer 2020

CONTACT

Noel Challis, Capital Projects and Park Manager
816.741.3993

BUDGET

~$6.5 million

PROJECT UNDERSTANDING - SUMMARY HIGHLIGHTS

OUR CHARGE

To assist the City of Pueblo in preparing a Master Plan for City Park and the adjacent Arkansas River Corridor that will expand and enhance, accessibility and recreation activity from the Lake Pueblo Dam east to Runyon Lake. The master plan will guide the future development of improvements for both the park and corridor, including proposed amenities, recreational facilities, and river improvements. The proposed master plan will also help the City define goals, establish polices, and ensure equitable connection to the surrounding community as outlined below.

PROGRAM DEVELOPMENT

Based on work sessions and interviews with City staff and advisory groups paired with recreation stakeholders and other community input we will establish a development program for City Park and the adjacent river corridor and trail. The proposed planning program will also consider past programming input from previous planning documents, such as the 2018 Arkansas River Levee Master Plan, as provided by the city. From these existing plans we will carry forward any relevant stakeholder input, market analysis, or needs assessment information regarding recreation opportunities. We will assist the city to consider the draft program and prioritize development based on current needs and future budgeting.

PREPARE SITE MASTER PLAN CONCEPTS

Based on our review of existing site information provided by the city, we will prepare an opportunity and challenges analysis for the project area. Through this lens we will prepare alternative concepts for the master plan areas, based on the approved development program, identifying physical park amenities and recreation facilities. We will review with City staff, recreation partners, and stakeholders to determine the best concepts or combination of ideas. Finally, we will develop a preferred site master plan (and CIP Plan) for City Park and the river corridor zone, that is shaped by community/ stakeholder input and guided by City leadership. The site master plan for these areas will focus on providing opportunities for recreational activities with an emphasis on providing adult/young adult/youth activities and programs that reflect current trends in the parks & recreation industry.

PROJECT APPROACH

Our planning and design approach is intended to assist the City of Pueblo in developing a site master plan for City Park, with a focus on the north portion of the property where it drops down into the Arkansas River corridor. The area below this high bluff is the location of several recent improvements to the river which has resulted in a safer and more accessible recreation destination for water-related activities. Another facet to our approach will be to study the access and circulation of City Park and it's connectivity to the surrounding community and the river corridor, with regional trail connections.

Our process will take into consideration all available existing information for the project site paired with knowledge that will be gained from discussions with City staff and our team's recent experience with the Arkansas River Levee Master Plan (completed by a member of our team in 2018). Community engagement will also help to shape our master planning approach. We will engage all stakeholders in a transparent and open process that capitalizes on the best ideas to generate community excitement and support, as well as guide future development and operations. Our process has been refined to be efficient, effective, and cost conscious. What we will accomplish in each task is addressed as follows:

SCOPE OF WORK

TASK A - PROJECT MANAGEMENT AND KICKOFF

An initial meeting with City staff will be facilitated by the Confluence team to clearly establish roles and responsibilities; identify project contacts and communication protocols; determine any initial data needs; and verify our proposed work plan and project schedule with confirmed dates for project milestones and deliverables. A key component of this meeting will be to review and confirm the anticipated community outreach process and timing. This meeting will also be an opportunity for City staff to share their "Vision" for initial programming ideas.

PROJECT VISIONING AND GOALS

The Confluence Team will work with City staff and the advisory group to define a Vision and review goals for the planning effort. During these meetings, we will work with the participants to define a clear set of goals for the project area that are supported by the group and will guide the master planning and design process. The goals will be visible and utilized throughout the process as a "yard stick" against which critical decision-making will be measured. The intent is that all decisions support the goals in some way. We suggest that in addition to the City Departments we also interview other select recreation stakeholders with knowledge of the project area, including public officials, project partner individuals, and parties representing a wide range of potential recreation user groups. We will also propose posting an online survey, to understand community wants and to ensure that the resulting master plans are representative of the needs of the community.

Deliverables: Kick-off meeting attendance/materials, work plan, interviews and results compilation/analysis, park programming supporting vision and goals.

TASK B – DATA COLLECTION AND REVIEW

During this task, the Confluence team will meet with the City staff to obtain any relevant base data which is currently available or obtainable in readily usable electronic format, including GIS and AutoCAD information for the site. This information will serve as the base for the development of our analysis and later for planning concepts.

We will collect and review any previous plans or studies related to City Park, the river corridor or the larger Pueblo parks and trails system. This will include, but not limited to, the 2021 Pueblo Comprehensive Plan and the 2003 Pueblo Open Space, Parks & Trails Master Plan. We will review this information to better understand the site, neighborhood linkages and past community desires. This review will also help us to determine where gaps in data or site information exist.

We will analyze all available site conditions information including, topography, vegetation, structures, utilities, boundaries, easements, etc. and prepare an opportunities and constraints map for each park site that will become the base for our conceptual design alternatives. Note that this analysis will also help identify if there may be a need for environmental assessment of areas within the master plan study zone.

2018 ARKANSAS RIVER LEVEE MASTER PLAN PREPARED BY CHAD HERD AT A PREVIOUS FIRM

Deliverables: Site Opportunities and Constraints Analysis for each park and adjacent river corridor

TASK C – COMMUNITY OUTREACH / ENGAGEMENT PLAN

Our team has the capabilities and expertise to safely and effectively integrate community and stakeholder engagement into the design and planning process. Our methods and tools have been proven to educate constituents about relevant project issues while gathering input and ideas that shape a project's final recommendations. We are open to the City's preference for engagement style and scope, however for this project, we propose a two-pronged approach with an initial engagement of City staff and departments and project partners. These would be targeted in-person meetings coordinated through the city early in the planning process. This initial effort will help shape the focus and goals of the project. The second engagement effort will be focused more on getting community input on the concept diagrams. For this effort we typically use innovative outreach tools, such as Social Pinpoint, that allow us to hold a virtual City Hall and collect detailed comments. However, we will work with the City to develop the best strategy for this project which may include a hybrid approach with both in-person and virtual outreach. We often attend community events to gather stakeholder input and are comfortable with both in-person and virtual outreach.

Stakeholder Engagement – City and Project Partners
The Team and City will set up a series of targeted meetings with City Staff and the Advisory Group (Parks staff, Conservancy District, planning staff, etc) and project partners (recreation partners, donors etc) early in the process to invite pre-concept input and idea generation. This engagement may also include collaboration with regional recreational organizations that already run existing facilities and programs in the area.

Community Engagement – (General Public)
The Confluence team will facilitate virtual/in-person public open houses for the project at which the concepts will be presented to provide those in attendance the opportunity to provide their input on preferences and desired elements. The virtual method to share the concept ideas and invite comment online also allows the opportunity to post the exhibits for a specific window of time. We feel that this allows for a much wider cast for community input. We will coordinate with the city to determine the desired best approach and breadth of exposure for this meeting. We are assuming a minimum of two public open house meetings. We understand that there are some neighbors who own private parcels adjacent to the project area. We may work with the city to set up some special, targeted meetings to address any conflicts that these individuals may have with the plan.

HAWK RIDGE PARK

Social Pinpoint – Outreach Tool
For this community outreach effort, we would propose the use of Social Pinpoint, a very effective outreach tool which allows for virtual meetings, but also allows a space for posting information that is readily accessible to the public and offers an opportunity for a variety of methods for community and specific stakeholder input. For example, the format will allow the design team to post concepts for review during specific intervals in the project and allows the addition of comments with noted pinpoints directly on graphics that are posted online. The comments can be answered and tracked throughout the project timeline with a summary report of input at the project conclusion. Social Pinpoint also allows the opportunity to post an online survey to understand the stakeholder, wants and needs for each park site.

Deliverables:Online survey and results compilation/analysis, community meetings and results compilation/analysis from Social Pinpoint website

TASK D– COMMUNITY NEEDS ASSESSMENT (PROGRAM DEVELOPMENT

We will facilitate a work session that engages the city and stakeholders in meaningful dialogue that provides us with an understanding of the priorities of group members, community desires, and the operations and functionality that should define each master plan. We will work with City Staff more specifically to prioritize options for programming and improvements based on cost, feasibility, and community need. The tasks during the work session with staff will including the following:

Continued on page 30

COMMUNITY ENGAGEMENT

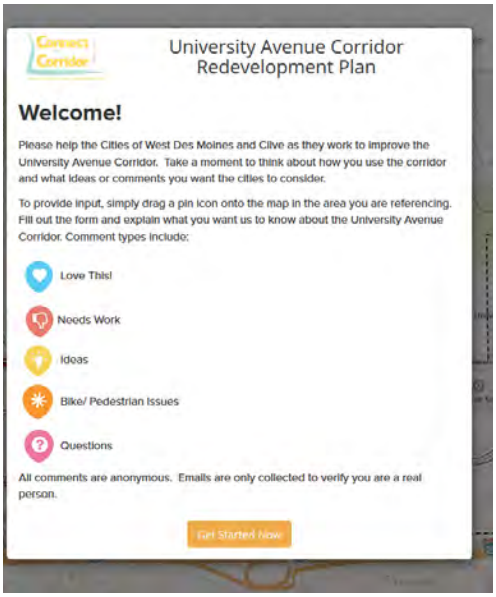

UTILIZING INNOVATIVE OUTREACH TOOLS

Our team has the capabilities and expertise to safely and effectively integrate community and stakeholder engagement into the design and planning process. Our methods and tools have been proven to educate constituents about relevant project issues while gathering input and ideas that shape a project's final recommendations.

Enhancing Opportunities Virtually

While our team has always been skilled in facilitating and engaging a wide variety of participants in traditional meetings and workshop settings, we have also been applying this unique skill set for use in reaching constituents that haven't been able to attend or participate in-person. Utilizing innovative techniques and software platforms has allowed our clients to maintain their momentum on numerous projects during the COVID-19 pandemic.

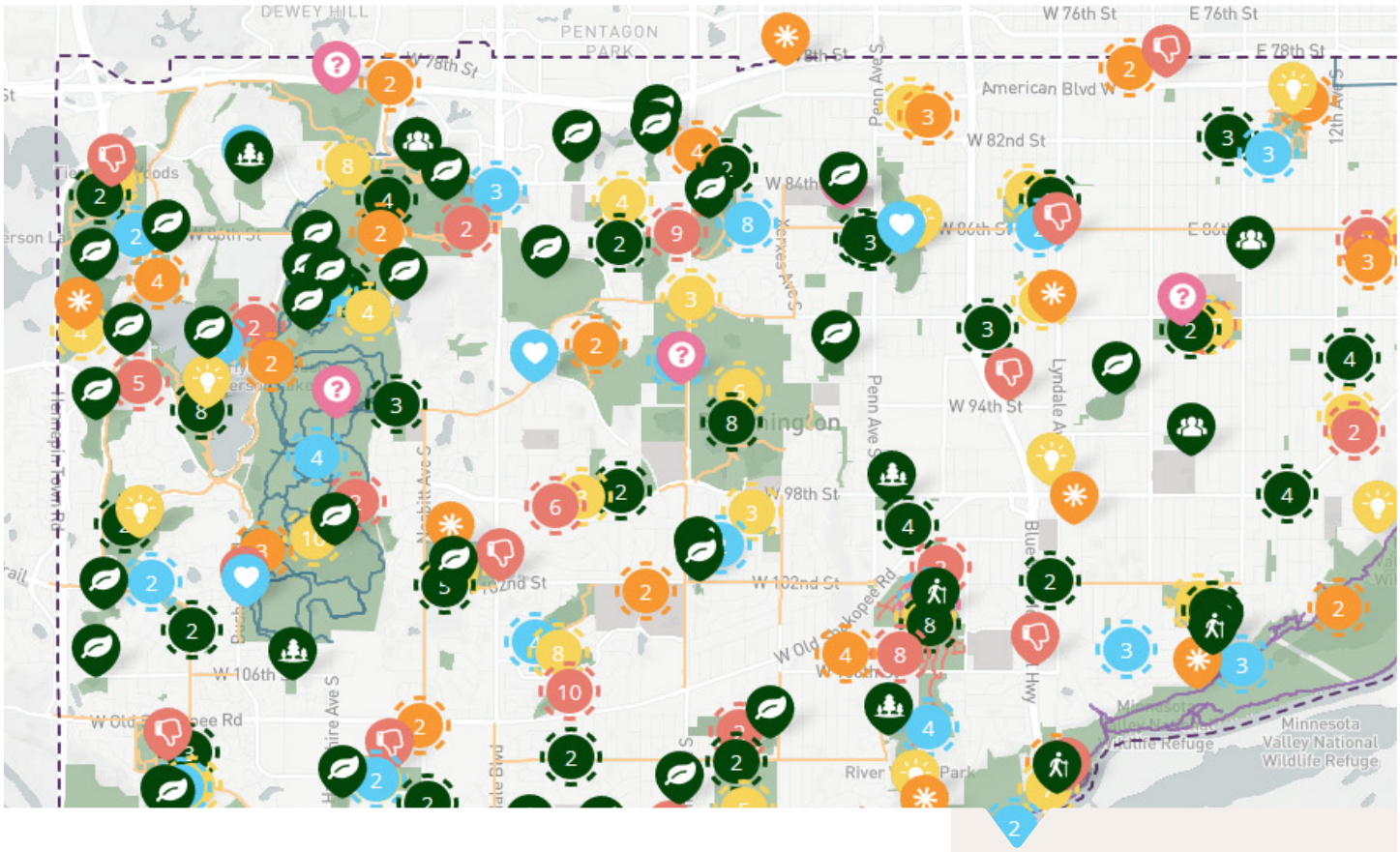

Project Websites + Integrated Tools

The need for utilizing digital resources to reach large audiences efficiently while maintaining an open and transparent planning process has never been greater. Our team regularly creates project websites that integrate all project information - while providing the community with an overview of the entire planning process with identified opportunities to provide input.

These sites can also integrate the ability to host Virtual Town Halls, Steering Committee meetings and small group breakout discussions that allow participation remotely. This allows interested citizens and stakeholders to remain involved and informed throughout the entire planning process, while also offering the potential for the site to house the final project document in a user-friendly format.

Amidst COVID-19 and CDC guidelines for social distancing and safety, our team has continued to engage constituents in project efforts while garnering robust community input engagement. Through the use of creative digital platforms and input methods, we have found new ways of virtually interacting with the community - with options including:

- Map-based comments + input
- Image preference exercises
- Questionnaires and surveys
- Alternative concept reviews
- Informational videos
- Virtual meetings + group discussions
- Integrated project websites

- Conduct work sessions with City Staff to prioritize programming and improvements.
- Provide list of feasible options for activities/ improvements within the project site.
- Provide preliminary costing information for most popular activity/improvement options.
- Prepare a feasibility analysis matrix (cost, site constraints) to narrow options.

Deliverables: programming work sessions (2), list of options for each site for various improvements, preliminary costing for large elements, feasibility analysis

TASK E– CONNECTIVITY PLAN (ACCESS AND CIRCULATION)

We will compile and review existing data that the City has for access and circulation of City Park and the adjacent trail system. This applies to both vehicular and pedestrian access and circulation.

- Evaluate user access and flow through City Park and on adjacent trails
- Provide guidelines for improved access and circulation
- Provide guidelines for fully connected trails
- Evaluate potential crossings and easements

Deliverables: summary of existing data, provide guidelines for improved access, circulation, and trail connectivity.

TASK F–SITE MASTER PLAN CONCEPTS (DEVELOPMENT ALTERNATIVES)

The Design Team will integrate the findings of the planning program process to prepare a series of alternative design concepts to address the identified opportunities and challenges for City Park and the adjacent river corridor. These design alternatives will consider various options such as site access/circulation, land use by zone, site amenities, recreation improvements, landscape improvements, general flood control and drainage, water allocation strategies, and ecological consideration. These conceptual development plans will identify locations for proposed elements and their relationship to each other. We will prepare illustrative plans and supporting graphics of the various recreation elements for each park that will be established during our visioning effort with the City and project partners.

SITE MASTER PLANS

Based on the Site Analysis/Assessment for the City Park and the adjacent Arkansas River Corridor below we will produce site conceptual master plans including the elements listed below:

- **Site Boundaries and Context** – Defining the City Park site boundary and its relationship to surrounding areas, including adjacent streets, buildings, natural features, along with connections to regional trail and park system connections.
- **Park Land Use Zones** – Identifying planning areas within the project site defining recreation areas, natural areas, facilities and structures, and event or gathering areas.
- **Access and Circulation** (pedestrian and auto) - Planning for the parks including trails, roads, parking areas, emergency and maintenance access.
- **Amenities and Facilities** – Identifying specific amenities and facilities to be included in the park, such as playgrounds, sports fields, picnic areas, restrooms, visitor center, rec center, field house, maintenance buildings etc.
- **Landscape Site Improvements** – Incorporating landscaping elements such as plantings, hardscape, water features, amphitheaters, gathering spaces for events, lighting, signage and other specialized site features to enhance the aesthetic appeal and functionality of City Park and the river corridor.
- **Stormwater Management** – Implementing strategies to manage stormwater runoff within the park site and the river corridor, such as bioswales, rain gardens, and permeable paving.
- **Accessibility** - Ensuring that each design complies with accessibility standards to accommodate individuals with disabilities and provide universal/inclusive access design where possible within the project site.
- **Sustainability and Environmental** – Incorporating sustainable design practices, such as water conservation, native plantings, pollinator gardens, energy-efficient lighting and other methods to minimize environmental impact

TASK G – MASTER PLAN ELEMENTS (CAPITAL IMPROVEMENT PLAN)

The input gathered from City Staff, stakeholders, and the community will be summarized and the most desirable and feasible components of the various concepts will be assembled into one Preferred Alternative Site Master Plan for City Park and the adjacent river corridor. We will further refine the master plans and develop supporting diagrams, sketches, digital renderings, and character images to illustrate the type, scale and character of the proposed improvements.

Confluence has a group of experts called 'The Digital Studio' that specialize in preparing 3-D digital graphics that will support the preferred concept plans and provide the City with the perfect catalyst for fund raising and attracting project partners for some of the more expensive

CAPITAL IMPROVEMENT PLAN

A Capital Improvement Plan (CIP) will be prepared to identify the program elements defined by the master plan to meet the parks and recreation needs of the community. The CIP will identify specific measurable strategic action items, priorities, sequences, and improvements to be implemented over a timeline that ranges from short to medium to long term. The direction of the CIP will be driven by community input and will include the following:

- A prioritized schedule of Capital Improvements
- Proposed renovations and new improvements to the park, trail, and river corridor
- Identify new capital improvement projects and identify costs and also maintenance and operations costs
- The CIP should be based on parks trends, market analysis, cost analysis, site analysis, and community/ stakeholder input

Deliverables: Initial Site Master Plan Concepts with supporting graphics, One Preferred Site Master Plan with supporting illustrative graphics showing options for each park, Capital Improvement Plan.

TASK H – PROJECT APPROVALS (MASTER PLAN REVIEW WITH THE CITY)

The Design Team will present the conceptual Site Master Plan alternatives for both parks to City Staff and Advisory Group for initial review and approval. This presentation will be an open dialogue format with open sharing of ideas. We will work with the staff to gather their feedback on the preliminary plans and their preferences for each alternative presented. The alternative plans will be revised based on the comments received to prepare Preferred Site Master Plans for the project area. We will then present Preferred Site Master Plans to Staff and Advisory Group for approval prior to sharing in the public forum for community input.

Approvals – Present finished products to Staff, the community, appointed and elected officials for final approval, as follows:

- City Staff and Advisory Group – review and comment on Master Plan alternatives and Preferred Master Plans for each park.
- General Community Open Houses – review and comment on Preferred Master Plan
- Pueblo Conservancy District – review and approve Final Preferred Master Plan.

Deliverables: Adoption draft of each plan, attendance of approval meetings, required revisions to plan, Final plans and supporting graphics in hard-copy and electronic format

Exclusions to the Scope of Work

- Site surveys
- Phase I Environmental Study of the two sites
- Geotechnical testing of the sites
- Traffic engineering study
- Civil engineering
- Stormwater engineering design
- Ecological analysis
- Construction drawings
- Irrigation design
- Architecture design
- Lighting design
- Fountain design

RACCOON RIVER BOATHOUSE

PROJECT TIMELINE WORK PROGRAM

PROJECT TIMELINE WORK PROGRAM

CITY PARK AND ARKANSAS RIVER CORRIDOR MASTER PLAN		2024			2025		
		OCT	NOV	DEC	JAN	FEB	MAR
TASK #	SCOPE ITEM						
A	PROJECT MANAGEMENT KICK OFF						
1	Develop Project Schedule						
2	Obtain all data						
3	Team meetings						
4	Provide materials to city throughout project						
5	Advisory Committee Meetings						
B	DATA COLLECTION AND REVIEW						
1	Data review and request						
2	Key staff and stakeholder interviews (8 meetings)						
C	COMMUNITY OUTREACH / ENGAGEMENT PLAN						
1	Citizen input - open house meetings (2 meetings)						
2	Stakeholder input - Social Pinpoint - Surveys						
3	Engagement Plan						
D	COMMUNITY NEEDS ASSESSMENT (PROGRAM DEVELOPMENT)						
1	Identify needs/priorities of community						
2	Determine interest needs for City Park						
3	Identify gaps in facilities/programs/services						
4	Review and inventory partnerships and facilities						
E	CONNECTIVITY PLAN (ACCESS AND CIRCULATION)						
1	Compile and review City connectivity data						
2	Evaluate user access and flow						
3	Provide guidelines for access and improvement						
4	Provide guidelines for fully connected trails						
5	Evaluate crossings and easements						
F	SITE MASTER PLAN CONCEPTS (DEVELOPMENT ALTERNATIVES)						
1	Develop Master Plan						
2	Estimate Probable Cost						
G	MASTER PLAN ELEMENTS (CAPITAL IMPROVEMENT PLAN)						
1	Prepare Capital Improvement Plan with Action Items						
2	Identify / research land acquisition						
H	PROJECT APPROVALS (MASTER PLAN REVIEW WITH THE CITY)						
1	Review and completion scope with City						
2	Formal Presentations with City and PCD						
PROJECT COMMUNICATION (SUMMARY OF ALL MEETINGS							

OFFICE OF THE SECRETARY OF STATE
OF THE STATE OF COLORADO

CERTIFICATE OF FACT OF GOOD STANDING

I, Jena Griswold, as the Secretary of State of the State of Colorado, hereby certify that, according to the records of this office,

Confluence, Inc.

is an entity formed or registered under the law of Iowa, has complied with all applicable requirements of this office, and is in good standing with this office. This entity has been assigned entity identification number 20201969303 and has provided the assumed entity name for use in Colorado

Confluence Company, Inc.

This certificate reflects facts established or disclosed by documents delivered to this office on paper through 02/29/2024 that have been posted, and by documents delivered to this office electronically through 03/04/2024 @ 11:42:49 .

I have affixed hereto the Great Seal of the State of Colorado and duly generated, executed, and issued this official certificate at Denver, Colorado on 03/04/2024 @ 11:42:49 in accordance with applicable law. This certificate is assigned Confirmation Number 15809013 .

Jena Griswold

Secretary of State of the State of Colorado

**********End of Certificate**********

Notice: A certificate issued electronically from the Colorado Secretary of State's website is fully and immediately valid and effective. However, as an option, the issuance and validity of a certificate obtained electronically may be established by visiting the Validate a Certificate page of the Secretary of State's website, https://www.coloradosos.gov/biz/CertificateSearchCriteria.do entering the certificate's confirmation number displayed on the certificate, and following the instructions displayed. Confirming the issuance of a certificate is merely optional and is not necessary to the valid and effective issuance of a certificate. For more information, visit our website, https://www.coloradosos.gov click "Businesses, trademarks, trade names" and select "Frequently Asked Questions."

Director of Finance

Sales Tax Division

One City Hall Place
Pueblo, CO 81003

Valerie A. Palumbo
Tax Audit Manager

Phone (719) 553-2659
Fax (719) 553-2657
salestax@pueblo.us

January 1, 2022

Dear Applicant:

Per the City of Pueblo Municipal Ordinance any/all businesses that operate within the City of Pueblo are mandated to be licensed.

Please see the following Ordinance(s):

Title XIV, Chapter 4, Art. II, Sec. 14-4-21. – Definitions

(8.5) *Economic nexus* means the connection between the City and a person not having a physical nexus in the State of Colorado, which connection is established when the person or marketplace facilitator makes retail sales into the City, and:

(a) In the previous calendar year, the person, which includes a marketplace facilitator, has made retail sales into the state exceeding the amount specified in C.R.S. § 39-26-102(3)(c), as amended; or

(b) In the current calendar year, 90 days has passed following the month in which the person, which includes a marketplace facilitator, has made retail sales into the state exceeding the amount specified in C.R.S. § 39-26-102(3)(c), as amended.

This definition does not apply to any person who is doing business in this state but otherwise applies to any other person.

(9) *Engaged in business in the City* means performing or providing taxable services in the City or selling, leasing, renting, delivering or installing tangible personal property for storage, use or consumption within the City. Such term includes, but is not limited to, any one of the following activities by a person:

(a) Maintaining a building, store, office, salesroom, warehouse or other place of business within the City either directly, indirectly or through a subsidiary;

(b) Sending one (1) or more employees, agents or commissioned salespersons into the City to solicit business or to demonstrate, install, assemble, repair, service or assist in the use of its products, or for other business reasons;

(c) Maintaining one (1) or more employees, agents or commissioned salespersons on duty at a location within the taxing jurisdiction;

(d) Owning, leasing, renting or otherwise exercising control over real or personal property within the City;

(e) Retailer or vendor in the state of Colorado making more than one (1) delivery into the City within any twelve-month period;

(f) Making retail sales sufficient to meet the definitional requirements of economic nexus as set forth is Subsection 8.5 of this Section.

Title IX, Chapter 1, Sec. 9-1-2. – Application.

(a) Compliance Required. It shall be unlawful and a Class 1 municipal offense for any person, either directly or indirectly, to conduct any business or nonprofit enterprise, or to use in connection therewith any vehicle, premises, machine or device, in whole or in part, for which a license, or permit is required by this Code or any law or ordinance of this City, without a license or permit therefor being first procured and kept in effect at all such times as required by this Code or other law or ordinance of the City.

If you have any questions or would like to obtain a license application, please contact the Sales Tax Division at 719.553.2659.

Valerie A. Palumbo

Valerie A. Palumbo
Tax Audit Manager

IF CONFLUENCE IS AWARDED THE PROJECT, WE WILL APPLY FOR A BUSINESS LICENSE WITH THE CITY OF PUEBLO

ACTIVELY REGISTERED WITH SAM.GOV

CONFLUENCE ID: FJXGDLJJTPJ8

CAGE/NCAGE : 5G2V2

DOING BUSINESS AS
CONFLUENCE INC

PHYSICAL ADDRESS
525 17TH ST
DES MOINES, IA

CONFLUENCE, INC. ● Active Registration

Unique Entity ID:
FJXGDLJJTPJ8

CAGE/NCAGE:
5G2V2

Doing Business As:
CONFLUENCE INC

Physical Address:
525 17TH ST
DES MOINES, IA 50309-3349 USA

Purpose of Registration:
All Awards

Expiration Date
Jan 2, 2025

CERTIFICATION REGARDING
BYRD ANTI-LOBBYING

Award of $100,00 or more; 2 CFR, Part 200, Appendix II(I)

The undersigned Contractor certifies, to the best of his or her knowledge, that:

1. No Federal appropriated funds have been paid or will be paid, by or on behalf of the undersigned, to any person for influencing or attempting to influence an officer or employee of an agency, a Member of Congress, an officer or employee of Congress, or an employee of a Member of Congress in connection with the awarding of any Federal contract, the making of any Federal grant, the making of any Federal loan, the entering into of any cooperative agreement, and the extension, continuation, renewal, amendment, or modification of any Federal contract, grant, loan, or cooperative agreement.

2. If any funds other than Federal appropriated funds have been paid or will be paid to any person for influencing or attempting to influence an officer or employee of any agency, a Member of Congress, an officer or employee of Congress, or an employee of a Member of Congress in connection with this Federal contract, grant, loan, or cooperative agreement, the undersigned shall complete and submit Standard Form- LLL, "Disclosure Form to Report Lobbying," in accordance with its instructions.

3. The undersigned shall require that the language of this certification be included in the award documents for all subawards at all tiers (including subcontracts, subgrants, and contracts under grants, loans, and cooperative agreements) and that all subrecipients shall certify and disclose accordingly.

This certification is a material representation of fact upon which reliance was placed when this transaction was made or entered into. Submission of this certification is a prerequisite for making or entering into this transaction imposed by Section 1352, Title 31, U.S. Code. Any person who fails to file the required certification shall be subject to a civil penalty of not less than $10,000 and not more than $100,000 for each such failure.

The Contractor signed below certifies or affirms the truthfulness and accuracy of each statement of its certification and disclosure, if any. In addition, the Contractor understands and agrees that the provisions of 31 U.S.C. Chapter 38, Administrative Remedies for False claims and Statements, apply to this certification and disclosure, if any.

Contractor Company Name: Confluence

Signature: _____ Date: 09-05-2024

Printed Name/Title: Chad Herd, PLA, ASLA - Principal

CONFLUENCE

City of Pueblo
Purchasing
Naomi Hedden, Director
230 S. Mechanic St., Pueblo, CO 81003

EVALUATION TABULATION

RFP No. 24-100

City Park & Arkansas River Corridor Master Plan Project

Report Generated: Friday, October 18, 2024

ANALYSIS OF PHASE 1 AND PHASE 2

AVERAGE SCORES PHASE 1 AND PHASE 2

Vendor	Phase 1 Total Score	Phase 2 Total Score	GRAND TOTAL SCORE (Max Score 100)
Confluence	88.75	93.25	91.0
Recreation Engineering and Planning	86.0	87.75	86.88

PHASE 2

AGGREGATE SCORES SUMMARY

Vendor	Total Score (Max Score 100)
Confluence	93.25
Recreation Engineering and Planning	87.75

PHASE 1

AGGREGATE SCORES SUMMARY

Vendor	Total Score (Max Score 100)
Confluence	88.75
Recreation Engineering and Planning	86
Design Workshop	83.92
Norris Design	83.5
Logan Simpson Design Inc.	83.25
Dig Studio, Inc.	82.5
Kimley-Horn	74.5

Docusign Envelope ID: 1DDD049B-FCF9-4559-95A9-751907C4636E

City Clerk's Office Item # M4

Background Paper for Proposed Resolution

COUNCIL MEETING DATE: November 11, 2024

TO: President Mark Aliff and Members of City Council

CC: Mayor Heather Graham

VIA: Marisa Stoller, City Clerk

FROM: Andrew Hayes, Public Works Director

SUBJECT: A RESOLUTION AWARDING A CONSTRUCTION CONTRACT IN THE AMOUNT OF $136,693.50 TO DOUG VAUGHN, LLC FOR PROJECT NO. 24-096, ADA CURB RAMPS - PHASE 2 (CDBG), SETTING FORTH $60,000.00 FOR CONTINGENCIES, AND AUTHORIZING THE PURCHASING AGENT TO EXECUTE SAME

SUMMARY:

Attached is a resolution awarding a Construction Contract to Doug Vaughn, LLC for Project No. 24-096 ADA Curb Ramps - Phase 2 (CDBG).

PREVIOUS COUNCIL ACTION:

None.

BACKGROUND:

This project will consist of ADA curb ramps and sidewalk improvements in the Belmont neighborhood area. This Resolution awards the construction contract to Doug Vaughn, LLC.

FINANCIAL IMPLICATIONS:

Funds in the amount of $196,693.50 (contract and contingencies) will be paid from Project Account CD2310, ADA Curb Ramps - State Fair.

BOARD/COMMISSION RECOMMENDATION

None.

STAKEHOLDER PROCESS:

None.

Docusign Envelope ID: 1DDD049B-FCF9-4559-95A9-751907C4636E

ALTERNATIVES:

Denial of this resolution will cancel the project.

RECOMMENDATION:

Approval of the Resolution.

ATTACHMENTS:

1. 24-096 Bid Summary

Docusign Envelope ID: 1DDD049B-FCF9-4559-95A9-751907C4636E

RESOLUTION NO. 15809

A RESOLUTION AWARDING A CONSTRUCTION CONTRACT IN THE AMOUNT OF $136,693.50 TO DOUG VAUGHN, LLC FOR PROJECT NO. 24-096, ADA CURB RAMPS - PHASE 2 (CDBG), SETTING FORTH $60,000.00 FOR CONTINGENCIES, AND AUTHORIZING THE PURCHASING AGENT TO EXECUTE SAME

WHEREAS, competitive bids for 24-096 ADA Curb Ramps - Phase 2 (CDBG) have been received and examined; and,

WHEREAS, the proposal of Doug Vaughn, LLC was the lowest bid determined to be responsive, and the Committee of Awards recommends to the City Council that it authorizes Project No. 24-096 ADA Curb Ramps - Phase 2 (CDBG) to be performed; NOW, THEREFORE,

BE IT RESOLVED BY THE CITY COUNCIL OF PUEBLO, that

SECTION 1.

The City Council authorizes Project No. 24-096 ADA Curb Ramps - Phase 2 (CDBG) to be performed, and the contract for said project is hereby awarded to Doug Vaughn, LLC in the amount of $136,693.50.

SECTION 2.

The Purchasing Agent is hereby authorized to execute said contract on behalf of the City of Pueblo, a Colorado Municipal Corporation, and the City Clerk shall affix the seal of the City thereto and attest same.

SECTION 3.

In addition to the amount of the bid set forth, as aforementioned, an additional amount as stipulated in this section is hereby established for contingencies and additional work.

Contingencies and Additional Work……$60,000.00

SECTION 4.

Funds in the amount of $196,693.50, for the contract and contingencies, shall be from account Project CD2310, ADA Curb Ramps - State Fair

SECTION 5.

The officers of the City of Pueblo are authorized to perform any and all acts consistent with this Resolution to implement the policies and procedures described herein.

Docusign Envelope ID: 1DDD049B-FCF9-4559-95A9-751907C4636E

SECTION 6.

This Resolution shall become effective immediately upon passage and approval.

INTRODUCED: November 11, 2024

BY: Regina Maestri
MEMBER OF CITY COUNCIL

APPROVED: DocuSigned by: Mark Aliff B7A4F51823AB482...
PRESIDENT OF CITY COUNCIL

ATTESTED BY: DocuSigned by: 7C02EBDFEC3D43C...
CITY CLERK

City of Pueblo
Purchasing
Naomi Hedden, Director
230 S. Mechanic St., Pueblo, CO 81003

EVALUATION TABULATION

IFB No. 24-096 (CD2310)

ADA Curb Ramps - Phase 2 (CDBG)

RESPONSE DEADLINE: October 30, 2024 at 11:00 am
Report Generated: Wednesday, October 30, 2024

VENDOR TOTALS

Vendor	Base Bid	Add Alternate No. 1	Total
Doug Vaughn, LLC	$100,863.50	$35,830.00	$136,693.50
A 5 Construction	$117,038.00	$43,583.50	$160,621.50
Cedar Ridge Landscape, Inc	$122,404.75	$45,390.00	$167,794.75
Gray Matter Construction, LLC	$185,030.70	$86,577.50	$271,608.20

BASE BID

BASE BID					A 5 Construction		Cedar Ridge Landscape, Inc		Doug Vaughn, LLC		Gray Matter Construction, LLC	
Selected	Line Item	Description	Quantity	Unit of Measure	Unit Cost	Total	Unit Cost	Total	Unit Cost	Total	Unit Cost	Total
X	1	Remove Asphalt	1401	S.F.	$4.00	$5,604.00	$1.75	$2,451.75	$2.00	$2,802.00	$4.00	$5,604.00
X	2	Remove Curb and Gutter	508	L.F.	$7.00	$3,556.00	$6.00	$3,048.00	$5.00	$2,540.00	$14.00	$7,112.00
X	3	Remove Concrete	2562	S.F.	$3.00	$7,686.00	$1.50	$3,843.00	$2.00	$5,124.00	$4.00	$10,248.00
X	4	Remove 7" Reinforced Concrete	1213	S.F.	$4.00	$4,852.00	$2.50	$3,032.50	$2.50	$3,032.50	$7.00	$8,491.00
X	5	Construct Curb Head	443	L.F.	$22.00	$9,746.00	$18.00	$7,974.00	$19.00	$8,417.00	$19.00	$8,417.00
X	6	Construct Curb and Gutter	488	S.F.	$38.00	$18,544.00	$38.00	$18,544.00	$30.00	$14,640.00	$20.00	$9,760.00
X	7	Construct 4" Concrete	2820	S.F.	$8.00	$22,560.00	$8.50	$23,970.00	$6.50	$18,330.00	$11.50	$32,430.00
X	8	Construct 6" Concrete	250	S.F.	$9.50	$2,375.00	$12.00	$3,000.00	$7.50	$1,875.00	$13.70	$3,425.00
X	9	Construct 7" Reinforced Concrete	1267	S.F.	$11.00	$13,937.00	$15.00	$19,005.00	$12.00	$15,204.00	$17.00	$21,539.00
X	10	Construct 2" Asphalt Patch	100	S.F.	$6.00	$600.00	$6.00	$600.00	$6.00	$600.00	$8.30	$830.00

BASE BID					A 5 Construction		Cedar Ridge Landscape, Inc		Doug Vaughn, LLC		Gray Matter Construction, LLC	
Selected	Line Item	Description	Quantity	Unit of Measure	Unit Cost	Total	Unit Cost	Total	Unit Cost	Total	Unit Cost	Total
X	11	Asphalt Roadway Patch	1296	S.F.	$9.00	$11,664.00	$9.00	$11,664.00	$8.00	$10,368.00	$10.20	$13,219.20
X	12	Remove Tree Stump 18-inch diameter	1	EA.	$200.00	$200.00	$400.00	$400.00	$400.00	$400.00	$3,350.00	$3,350.00
X	13	Install Gravel 3-inch Deep	487	S.F.	$1.00	$487.00	$2.50	$1,217.50	$3.00	$1,461.00	$6.50	$3,165.50
X	14	Install 24"X24" Tactile Bands	4	EA.	$160.00	$640.00	$250.00	$1,000.00	$115.00	$460.00	$320.00	$1,280.00
X	15	Install 24"X30" Tactile Bands	38	EA.	$159.00	$6,042.00	$265.00	$10,070.00	$145.00	$5,510.00	$390.00	$14,820.00
X	16	Relocate Signs	3	EA.	$150.00	$450.00	$50.00	$150.00	$50.00	$150.00	$400.00	$1,200.00
X	17	Install Class 6 Road Base	17	TONS	$35.00	$595.00	$55.00	$935.00	$50.00	$850.00	$120.00	$2,040.00
X	18	Erosion and Sediment Control	1	L.S.	$500.00	$500.00	$500.00	$500.00	$300.00	$300.00	$3,200.00	$3,200.00
X	19	Traffic Control	1	L.S.	$4,000.00	$4,000.00	$5,500.00	$5,500.00	$3,800.00	$3,800.00	$31,400.00	$31,400.00
X	20	Mobilization	1	L.S.	$3,000.00	$3,000.00	$5,500.00	$5,500.00	$5,000.00	$5,000.00	$3,500.00	$3,500.00
Total						$117,038.00		$122,404.75		$100,863.50		$185,030.70

ADD ALTERNATE NO. 1

ADD ALTERNATE NO. 1					A 5 Construction		Cedar Ridge Landscape, Inc		Doug Vaughn, LLC		Gray Matter Construction, LLC	
Selected	Line Item	Description	Quantity	Unit of Measure	Unit Cost	Total	Unit Cost	Total	Unit Cost	Total	Unit Cost	Total
X	21	Remove Asphalt	516	S.F.	$4.00	$2,064.00	$1.75	$903.00	$2.00	$1,032.00	$4.00	$2,064.00
X	22	Remove Curb and Gutter	128	L.F.	$7.00	$896.00	$6.00	$768.00	$5.00	$640.00	$14.00	$1,792.00
X	23	Remove Concrete	458	S.F.	$3.00	$1,374.00	$1.50	$687.00	$2.00	$916.00	$4.00	$1,832.00
X	24	Remove 7" Reinforced Concrete	1095	S.F.	$4.00	$4,380.00	$2.50	$2,737.50	$2.50	$2,737.50	$7.00	$7,665.00
X	25	Construct Curb Head	75	L.F.	$22.00	$1,650.00	$18.00	$1,350.00	$19.00	$1,425.00	$19.00	$1,425.00
X	26	Construct Curb and Gutter	128	L.F.	$38.00	$4,864.00	$38.00	$4,864.00	$30.00	$3,840.00	$20.00	$2,560.00
X	27	Construct 4" Concrete	341	S.F.	$8.50	$2,898.50	$8.50	$2,898.50	$6.50	$2,216.50	$11.50	$3,921.50
X	28	Construct 6" Concrete	254	S.F.	$10.00	$2,540.00	$12.00	$3,048.00	$7.50	$1,905.00	$13.70	$3,479.80
X	29	Construct 7" Reinforced Concrete	1095	S.F.	$12.00	$13,140.00	$15.00	$16,425.00	$12.00	$13,140.00	$17.00	$18,615.00
X	30	Construct Asphalt Roadway Patch	516	S.F.	$8.00	$4,128.00	$9.00	$4,644.00	$8.00	$4,128.00	$10.20	$5,263.20

ADD ALTERNATE NO. 1					A 5 Construction		Cedar Ridge Landscape, Inc		Doug Vaughn, LLC		Gray Matter Construction, LLC	
Selected	Line Item	Description	Quantity	Unit of Measure	Unit Cost	Total	Unit Cost	Total	Unit Cost	Total	Unit Cost	Total
X	31	Install 24" X 30" Tactile Bands	10	EA.	$160.00	$1,600.00	$265.00	$2,650.00	$145.00	$1,450.00	$390.00	$3,900.00
X	32	Relocate Sign	1	EA.	$150.00	$150.00	$50.00	$50.00	$50.00	$50.00	$400.00	$400.00
X	33	Install Class 6 Road Base	3	TON	$50.00	$150.00	$55.00	$165.00	$50.00	$150.00	$120.00	$360.00
X	34	Erosion and Sediment Control	1	L.S.	$1,499.00	$1,499.00	$200.00	$200.00	$200.00	$200.00	$1,500.00	$1,500.00
X	35	Traffic Control	1	L.S.	$2,250.00	$2,250.00	$4,000.00	$4,000.00	$2,000.00	$2,000.00	$31,800.00	$31,800.00
Total						$43,583.50		$45,390.00		$35,830.00		$86,577.50

VENDOR QUESTIONNAIRE PASS/FAIL

Question Title	A 5 Construction	Cedar Ridge Landscape, Inc	Doug Vaughn, LLC	Gray Matter Construction, LLC
BID GUARANTEE	Pass	Pass	Pass	Pass
CONFIRMATION OF UNDERSTANDING AND OFFER	Pass	Pass	Pass	Pass
NAME, TITLE, AND CONTACT INFORMATION	Pass	Pass	Pass	Pass
SAM.gov REGISTRATION	Pass	Pass	Pass	
ACKNOWLEDGEMENTS				
AFFIRMATIVE ACTION PLAN REQUIREMENT:	Pass	Pass	Pass	Pass
PERFORMANCE OF WORK REQUIREMENT:	Pass	Pass	Pass	Pass
COLORADO LABOR REQUIREMENT:	Pass	Pass	Pass	Pass
INSURANCE REQUIREMENTS	Pass	Pass	Pass	Pass
ACKNOWLEDGEMENT OF PREVAILING WAGES & ADDITIONAL WAGE CLASSIFICATION RESPONSIBILITY	Pass	Pass	Pass	Pass
CERTIFICATION OF NONSEGREGATED FACILITIES	Pass	Pass	Pass	Pass
SALES AND/OR USE TAX INFORMATION	Pass	Pass	Pass	Pass
Has/is this firm or any officer or partner of this firm:				
Convicted of a criminal offense	Pass	Pass	Pass	Pass
Convicted under state or federal statutes	Pass	Pass	Pass	Pass
Convicted under state or federal antitrust statutes	Pass	Pass	Pass	Pass
Failed to perform	Pass	Pass	Pass	Pass
Suspension or Debarment	Pass	Pass	Pass	Pass
Unqualified	Pass	Pass	Pass	Pass
Unlicensed	Pass	Pass	Pass	Pass

Question Title	A 5 Construction	Cedar Ridge Landscape, Inc	Doug Vaughn, LLC	Gray Matter Construction, LLC
Delinquent	Pass	Pass	Pass	Pass
Confirmation	Pass	Pass	Pass	Pass
Section 3 Forms				
Section 3 Form S3a Section 3 Compliance	Pass	Pass	Pass	Pass
Section 3 Form S3e Business Certification	Pass	Pass	Pass	Pass

Background Paper for Proposed Resolution

COUNCIL MEETING DATE: November 11, 2024

TO: President Mark Aliff and Members of City Council

CC: Mayor Heather Graham

VIA: Marisa Stoller, City Clerk

FROM: Andrew Hayes, Public Works Director

SUBJECT: A RESOLUTION ESTABLISHING PROJECT ACCOUNT SR2401 - STREET REPAIR UTILITY RATE STUDY, TRANSFERRING $50,000.00 FROM PROJECT ACCOUNT SRAN01 - ANNUAL STREET REHABILITATION TO PROJECT ACCOUNT SR2401 - STREET REPAIR UTILITY RATE STUDY, AND BUDGETING AND APPROPRIATING $50,000 TO PROJECT ACCOUNT SR2401 - STREET REPAIR UTILITY RATE STUDY, AWARDING AN AGREEMENT FOR PROFESSIONAL CONSULTING SERVICES IN THE AMOUNT OF $44,999 TO RAFTELIS FINANCIAL CONSULTANTS, INC., A NORTH CAROLINA CORPORATION AUTHORIZED TO DO BUSINESS IN COLORADO, FOR PROJECT NO. 24A-052 STREET REPAIR UTILITY ENTERPRISE RATE STUDY AND AUTHORIZING THE PURCHASING AGENT TO EXECUTE SAME

SUMMARY:

This Resolution establishes a new project account (SR2401 - Street Repair Utility Rate Study), transfers $50,000 from Project Account SRAN01 - Annual Street Rehabilitation into the new project account, budgets and appropriates those funds and awards an Agreement for Professional Consulting Services to Raftelis Financial Consultants, Inc. to perform a rate study for the Street Repair Utility Enterprise.

PREVIOUS COUNCIL ACTION:

None.

BACKGROUND:

Section 12-11-6 of the Pueblo Municipal Code requires that a rate study be updated periodically.

FINANCIAL IMPLICATIONS:

Approval of this Resolution will result in funds in the amount of $50,000.00 being transferred from Project Account SRAN01 to Project Account SR2401, and budgeting and appropriation of those funds into Project Account SR2401 - Street Repair Utility Rate Study.

Funding in the amount of $44,999 will be paid from SR2401 - Street Repair Utility Rate Study.

BOARD/COMMISSION RECOMMENDATION:

Not applicable to this Resolution.

STAKEHOLDER PROCESS:

Not applicable to this Resolution.

ALTERNATIVES:

Failure to approve this Resolution will prevent the City from being able to complete the required rate study.

RECOMMENDATION:

Approval of this Resolution.

ATTACHMENTS:

1. 24a-052 Raftelis Agmt for Street Repair Utility Enterprise Rate Study (final)

RESOLUTION NO.

A RESOLUTION ESTABLISHING PROJECT ACCOUNT SR2401 - STREET REPAIR UTILITY RATE STUDY, TRANSFERRING $50,000.00 FROM PROJECT ACCOUNT SRAN01 - ANNUAL STREET REHABILITATION TO PROJECT ACCOUNT SR2401 - STREET REPAIR UTILITY RATE STUDY, AND BUDGETING AND APPROPRIATING $50,000 TO PROJECT ACCOUNT SR2401 - STREET REPAIR UTILITY RATE STUDY, AWARDING AN AGREEMENT FOR PROFESSIONAL CONSULTING SERVICES IN THE AMOUNT OF $44,999 TO RAFTELIS FINANCIAL CONSULTANTS, INC., A NORTH CAROLINA CORPORATION AUTHORIZED TO DO BUSINESS IN COLORADO, FOR PROJECT NO. 24A-052 STREET REPAIR UTILITY ENTERPRISE RATE STUDY AND AUTHORIZING THE PURCHASING AGENT TO EXECUTE SAME

WHEREAS, the Proposal of Raftelis Financial Consultants, Inc., for Project No. 24a-052 Street Repair Utility Enterprise Rate Study, has been received and examined; AND,

WHEREAS, the Proposal of Raftelis Financial Consultants, Inc., was determined to be advantageous to the City of Pueblo, and in the best interest of the City of Pueblo, based on the evaluation factors set forth in the Request for Proposals; NOW, THEREFORE,

BE IT RESOLVED BY THE CITY COUNCIL OF PUEBLO, that

SECTION 1.

Project No. SR2401 - Street Repair Utility Rate Study is hereby established.

SECTION 2.

The Director of Finance is directed to transfer, budget, and appropriate funds in the amount of $50,000 from Project Account SRAN01 - Annual Street Rehabilitation to Project Account SR2401 - Street Repair Utility Rate Study Project.

SECTION 3.

The City Council authorizes Project No. 24a-052 Street Repair Utility Enterprise Rate Study to be performed, and the Contract for said services is hereby awarded to Raftelis Financial Consultants, Inc, a North Carolina corporation authorized to do business in Colorado, in the amount of $44,999.

SECTION 4.

Funds for said Agreement shall be paid from Project Account SR2401 - Street Repair Utility Enterprise Rate Study.

SECTION 5.

The Purchasing Agent is hereby authorized to execute said contract on behalf of the City of Pueblo, a Colorado Municipal Corporation, and the City Clerk shall affix the seal of the

City thereto and attest the same.

SECTION 6.

The officers of the City are authorized to perform any and all acts consistent with this Resolution to implement the policies and procedures described herein.

SECTION 7.

This Resolution shall become effective upon passage and approval.

INTRODUCED: November 11, 2024

BY: Roger Gomez
MEMBER OF CITY COUNCIL

APPROVED: _____
PRESIDENT OF CITY COUNCIL

ATTESTED BY: _____
CITY CLERK

AGREEMENT FOR PROFESSIONAL CONSULTING SERVICES

BY AND BETWEEN CITY OF PUEBLO AND

RAFTELIS FINANCIAL CONSULTANTS, INC

24a-052

STREET REPAIR UTILITY ENTERPRISE RATE STUDY

AGREEMENT FOR PROFESSIONAL CONSULTING SERVICES BY AND BETWEEN CITY OF PUEBLO AND RAFTELIS FINANCIAL CONSULTANTS, INC.

1. INTRODUCTION

THIS AGREEMENT ("Agreement") made and entered this _____ day of _____, 20____, by and between the City of Pueblo, a Colorado Municipal Corporation (hereinafter referred to as "City") and Raftelis Financial Consultants, Inc., a North Carolina corporation authorized to do business in Colorado (hereinafter referred to as "Consultant"), a professional firm for Consultant to render certain professional project studies, analysis, reporting, and related services for City in connection with Project 24a-052 Street Repair Utility Enterprise Rate Study, hereinafter referred to as the "Project." In consideration of the mutual covenants hereinafter set forth, the parties agree as follows:

A. Consultant shall satisfactorily perform project management, research, analysis, planning, reporting, and related services for the Project described in more detail in Schedule 1 attached hereto and incorporated herein by reference (the "Services"). Such Services shall include all usual and customary professional services incidental to the work on the Project.

B. To the extent Consultant performs any of the Project work through subcontractors or subconsultants, Consultant shall be and remain as fully responsible for the full performance and quality of services performed by such subcontractors or subconsultants as it is for services performed directly by Consultant or Consultant's employees pursuant to the terms of this Agreement.

C. To the extent Consultant requires access to private property to perform its services hereunder, Consultant shall be required to make arrangements to obtain such access. However, in the event City has already secured access for Consultant to any such property through a right of entry agreement, access agreement, letter of consent or other instrument, Consultant shall fully comply with and be subject to the terms and conditions set forth therein. A copy of any such instrument will be provided to Consultant upon request.

2. CONSULTANT'S RESPONSIBILITIES

A. Consultant shall be responsible for the professional quality, technical accuracy, and timely completion of Consultant's work, including that performed by Consultant's subconsultants and subcontractors, and all data, reports, plans, proposals, and other services, irrespective of City's approval of or acquiescence in same. Consultant shall be responsible, in accordance with applicable law, to City for all loss or damage to City to the extent caused by Consultant's negligent act or omission; except that Consultant hereby irrevocably waives and excuses City and City's attorneys from compliance with any requirement to obtain a certificate of review as a

condition precedent to commencement of an action, including any such requirements set forth in Section 13-20-602, C.R.S. or similar statute, whether now existing or hereafter enacted.

B. Consultant shall be completely responsible for the safety of Consultant's employees in the execution of work under this Agreement and shall provide all necessary safety and protective equipment for said employees.

C. Consultant acknowledges that time is of the essence with respect to the completion of its services under this Agreement. City and Consultant shall mutually agree upon a schedule for the project, which shall generally adhere to Work Schedule in Schedule 3, with time periods for which Consultant will commence and complete each major work item. Except to the extent the parties agree to time extensions for delays beyond the control of Consultant, Consultant shall adhere to this schedule and perform its work in a timely manner so as not to delay City's timetable for achievement of interim tasks and final completion of Project work. Consultant further acknowledges that its schedule has accounted for all reasonably anticipated delays, including those inherent in the availability of tools, supplies, labor and utilities required for the work, the availability of information which must be obtained from any third parties, and all conditions to access to public and private facilities.

D. Before undertaking any work or incurring any expense which Consultant considers beyond or in addition to the Services described in Schedule 1 or otherwise contemplated by the terms of this Agreement, Consultant shall advise City in writing that (1) Consultant considers the work beyond the scope of this Agreement, (2) the reasons that Consultant believes the out of scope or additional work should be performed, and (3) a reasonable estimate of the cost of such work. Consultant shall not proceed with any out of scope or additional work until authorized in writing by City. The compensation for such authorized work shall be negotiated, but in the event the parties fail to negotiate or are unable to agree as to compensation, then Consultant shall be compensated for its direct costs and professional time at the rates set forth in Schedule 2 attached hereto.

E. Consultant acknowledges that, due to the nature of the services for this project, related professional services, and the impact of same on the Project, the City has a substantial interest in the personnel and consultants to whom Consultant assigns principal responsibility for services performed under this Agreement. Consequently, Consultant represents that Consultant has selected and intends to employ or assign the key personnel and subconsultants identified in Schedule 4 ("Identification of Personnel, Subcontractors, and Task Responsibility") attached hereto for the Project assignments and areas of responsibility stated therein. Within 10 days of execution of this Agreement, City shall have the right to object in writing to employment on the Project of any such key person, subconsultant, or assignment of principal responsibility, in which case Consultant will employ alternate personnel for such function or reassign such responsibility to another to whom City has no reasonable objection. Thereafter, Consultant shall not assign or reassign Project work to any person to whom City has reasonable objection.

3. CITY'S RESPONSIBILITIES

A. City agrees to advise Consultant regarding City's Project requirements and to provide all relevant information, data and previous reports accessible to City which Consultant may reasonably require.

B. City shall designate a Project Representative to whom all communications from Consultant shall be directed and who shall have limited administrative authority on behalf of City to receive and transmit information and make decisions with respect to the Project. Said representative shall not, however, have authority to bind City as to matters of governmental policy or fiscal policy, nor to contract for additions or obligations exceeding a value which is the lesser of $5000 or 5% of the maximum agreement price.

C. City shall examine all documents presented by Consultant and render decisions pertaining thereto within a reasonable time. The City's approval of any data, reports, plans, proposals, or product furnished hereunder shall not in any way relieve Consultant of responsibility for the professional adequacy of its work.

D. City shall perform its obligations and render decisions within a reasonable time under the circumstances presented. Based upon the nature of City and its requirements, a period of 14 days shall be presumed reasonable for any decision not involving policy decision or significant financial impact, when all information reasonably necessary for City to responsibly render a decision has been furnished. A period of 46 days shall be presumed reasonable for City to act with respect to any matter involving policy or significant financial impact. The above periods of presumed reasonableness shall be extended where information reasonably required is not within the custody or control of City but must be procured from others.

4. TIME FOR PERFORMANCE

Consultant's obligation to render services shall continue for such period of time as may reasonably be required for completion of the work contemplated in Schedule 1 – “Services” and Section 2 of this Agreement. The proposed work schedule may be adjusted by mutual agreement of all parties.

5. PAYMENT

A. City will pay to Consultant as full compensation for all services required to be performed by Consultant under this Agreement, except for services for additional work or work beyond the scope of this Agreement, an amount not to exceed $44,999.00 in the aggregate as set forth in Schedule 2 "Fee Schedule" and computed in accordance with this Section. In the event compensation for services is set forth in Schedule 2 as to each phase of work indicated in this Agreement, the maximum amount of compensation for any phase shall not exceed the amount specified in Schedule 2 for such phase.

B. Consultant shall submit periodic, but not more frequently than monthly, applications for payment, aggregating to not more than the maximum amount set forth above, for actual professional services rendered and reimbursable expenses incurred. Such applications shall be submitted based upon the hourly rates and expense reimbursement provisions set forth in Schedule 2 attached hereto and shall contain appropriate documentation that such services have been performed and expenses incurred. Thereafter, City shall pay Consultant for the amount of the application within 45 days of the date of such application is received, provided that sufficient documentation has been furnished, and further provided that City will not be required to pay more than 90% of the maximum amount unless the Consultant's services on the Project phases for which this Agreement is applicable have been completed to City's reasonable satisfaction and all required Consultant submittals have been provided.

C. No separate or additional payment shall be made for profit, overhead, local telephone expenses, lodging, routine photocopying, computer time, secretarial or clerical time or similar expenses unless otherwise provided and listed in Schedule 2 - "Fee Schedule."

D. No compensation shall be paid to Consultant for services required and expenditures incurred in correcting Consultant's mistakes or negligence.

E. Compensation for authorized work beyond the scope of this Agreement shall be governed by Section 2.

6. TERMINATION

A. City reserves the right to terminate this Agreement and Consultant's performance hereunder, at any time upon written notice, either for cause or for convenience. Upon such termination, Consultant and its subcontractors shall cease all work, stop incurring expenses, and shall promptly deliver to City all data, reports, plans, proposals, or work product and materials as Consultant may have accumulated in performing this Agreement, together with all finished work and work in progress, in each case that was intended by Consultant as a deliverable hereunder. Consultant shall at all times act in good faith with respect to the orderly transfer of work to the City or any entity designated by City.

B. Upon termination of this Agreement for events or reasons not the fault of Consultant, Consultant shall be paid at the rates specified in Schedule 2 for all services rendered and reasonable costs incurred to the date of termination; together with any reasonable costs incurred within 10 days of termination provided such latter costs could not be avoided or were incurred in mitigating loss or expenses to Consultant or City. Consultant shall provide a detailed final invoice to the City within fourteen (14) calendar days from the effective date of termination, itemizing the work completed, costs incurred, and any outstanding payments due. In no event shall payment to Consultant upon termination exceed the maximum compensation provided for complete performance in Section 5, and the Consultant expressly waives any right

to claim damages, including but not limited to lost profits, anticipated revenue, or indirect or consequential damages arising out of or relating to the termination for convenience.

C. In the event termination of this Agreement or Consultant's services is for breach of this Agreement by Consultant, or for other fault of Consultant including but not limited to any failure to timely proceed with work, or to pay its employees and Consultants, or to perform work according to the highest professional standards (as of the time and at the location the services are provided), or to perform work in a manner deemed satisfactory by City's Project Representative, then in that event, Consultant's entire right to compensation shall be limited to the lesser of: (1) the reasonable value of completed work to City, or (2) payment at the rates specified in Schedule 2 for services satisfactorily performed and reimbursable expenses reasonably incurred, prior to date of termination. In providing the services hereunder, Consultant may rely on all data and information provided by or on behalf of the City.

D. Consultant's responsibility for its completed work and services shall survive any termination.

7. GENERAL PROVISIONS

7.1. Ownership of Documents

All documents regarding project management, research, analysis, planning, and all other documents or instruments procured or produced by the Consultant in the performance of this Agreement and intended by Consultant as a deliverable hereunder shall be the sole property of the City and the City is vested with all rights therein of whatever kind and however created, whether created by common law, statutory law, or by equity. The Consultant agrees that the City shall have access at all reasonable times to inspect and make copies of all such deliverables. In the event City uses the information provided hereunder for another project independent from Project, without adaptation by Consultant, City shall hold harmless Consultant from all loss, claims, injury, and judgments arising from the use of such information for such other project. Nothing in this Agreement shall be deemed or construed as a waiver, release, transfer, assignment or divestiture by Consultant of any of its intellectual property, know-how, or trade secrets.

7.2. Advertising

Unless specifically approved in advance in writing by City, Consultant shall not include representations of the Project in any advertising or promotional materials, except for accurate statements contained in resumes or curriculum vitae of Consultant’s employees. If Consultant wishes to include representations in advertising or promotional materials, it shall submit a draft of same and printer’s proof of the proposed advertising or promotional materials to the City for prior review and shall not publish or distribute same unless written approval of the materials is first obtained.

7.3. Equal Employment Opportunity

In connection with the performance of this Agreement, Consultant shall not discriminate against any employee or applicant for employment because of race, color, religion, sex, sexual orientation, national origin, disability, or age. Consultant shall endeavor to ensure that applicants are employed, and that

employees are treated during employment without regard to their race, color, religion, sex, sexual orientation, national origin, disability, or age.

7.4. Notices

Any and all notices or other communications required or permitted by this Agreement or by law to be served on or given to either the City or the Consultant by the other party shall be in writing and shall be deemed duly served and given when personally delivered to the party to whom it is directed, or in lieu of such personal service when deposited in the United States mail, first-class postage prepaid, addressed to the City of Pueblo, Department of Public Works, Attn: Andrew Hayes, 211 E. D Street, Pueblo, CO, 81003; or to the Consultant, Raftelis Financial Consultants, Inc., Attn: Andrew Rheem, Senior Manager, 2679 W. Main Street, Littleton, CO, 80120. Either party may change their address for the purpose of this paragraph by giving written notice of such change to the other party in the manner provided in this paragraph.

7.5. Entire Agreement

This instrument contains the entire agreement between the City and the Consultant respecting the Project, and any other written or oral agreement or representation respecting the Project or the duties of either the City or the Consultant in relation thereto not expressly set forth in this instrument are null and void. Notwithstanding the foregoing, the terms of Project 24a-052 Street Repair Utility Enterprise Rate Study are hereby incorporated herein, and Consultant agrees to abide by and comply with the same. In the event of any conflict between any provision of this Agreement and a provision of any Schedule or attachment to this Agreement, the provision in this Agreement shall control and supersede the conflicting provision in the Schedule or attachment. Any inconsistent resolution provision in any attachment to this Agreement shall be void.

7.6. Subcontracts

A. City acknowledges that Consultant is the prime contractor and the only party with whom City has a contractual relationship under this Agreement. To the extent Consultant performs any Project activities through subconsultants or subcontractors, Consultant shall contractually bind each of its subconsultants and subcontractors by subcontract agreement to all of the terms of this Agreement which are for the benefit of City, and City shall be a third-party beneficiary of those subcontract provisions.

B. Consultant shall indemnify and defend City from all claims and demands for payment for services provided by subcontractors of Consultant.

C. Consultant acknowledges that, due to the nature of the services to be provided under this Agreement, the City has a substantial interest in the personnel and consultants to whom Consultant assigns principal responsibility for services performed under this Agreement. Consequently, Consultant represents that it has selected and intends to employ or assign the key personnel and consultants identified in its proposal submitted to City prior to execution of this Agreement to induce City to enter this Agreement. Consultant shall not change such consultants or key personnel except after giving notice of a proposed change to City and

receiving City's consent thereto. Consultant shall not assign or reassign Project work to any person to whom City has reasonable objection.

7.7. Successors and Assigns

This Agreement shall be binding on the parties hereto and on their partners, heirs, executors, administrators, successors, and assigns; provided, however, that neither this Agreement, nor any part thereof, nor any moneys due or to become due hereunder to the Consultant may be assigned by it without the written consent of the City. It is expressly understood and agreed that enforcement of the terms and conditions of this Agreement, and all rights of action relating to such enforcement, shall be strictly reserved to the parties hereto, and nothing contained in this Agreement shall give or allow any such claim or right of action by any other or third person or entity on such Agreement. It is the express intention of the parties hereto that any person or entity, other than the parties to this Agreement, receiving services or benefits under this Agreement shall be deemed to be an incidental beneficiary only.

7.8. Amendments

No amendment to this Agreement shall be made nor be enforceable unless made by written Amendment signed by an authorized representative of both Consultant and City.

7.9. Choice of Law, Jurisdiction, and Venue

Colorado law, the Pueblo City Charter, the Pueblo Municipal Code, and rules and regulations issued pursuant thereto shall be applied in the interpretation, execution, and enforcement of this Agreement. Any provision included or incorporated herein by reference that conflicts with said laws, rules, and regulations shall be null and void. All suits or actions related to this Agreement shall be filed and proceedings held in the State of Colorado and exclusive venue shall be in the County of Pueblo.

7.10. Severability

If any provision of this Agreement, except for Section 2, is determined to be directly contrary to and prohibited by law or the requirements of any federal grant or other Project funding source, then such provision shall be deemed void and the remainder of the Agreement enforced. However, it is the intent of the parties that Section 2 of this Agreement not be severable, and that if any provision of said section be determined to be contrary to law or the terms of any federal grant, then this entire Agreement shall be void.

7.11. Appropriations

A. Subject to execution of this Agreement by the Director of Finance certifying that a balance of appropriation exists and funds are available, the amount of money appropriated for this Agreement is equal to or in excess of the maximum compensation payable hereunder; provided, however, that if work is phased and subject to annual appropriation, funds only in the amount of initial appropriation are available and Consultant shall confirm availability of funds before proceeding with work exceeding initial and subsequent annual appropriations.

B. Financial obligations of the City payable after the current City Fiscal Year are contingent upon funds for that purpose being appropriated, budgeted, and otherwise made available.

8. DISPUTES

Except as herein specifically provided otherwise, disputes concerning the performance of this Agreement which the designated Agreement representatives cannot resolve shall be referred in writing to the Mayor's Office for the City for a final determination of the issue. The Parties agree that participation in this administrative procedure shall be a condition precedent to the initiation of litigation, except in the case of an emergency or other conditions that entitle either Party to seek injunctive or emergency relief from a court of competent jurisdiction, in which no participation in the preceding alternative dispute resolution process shall be required.

9. INSURANCE

9.1. Conditions

A. Consultant agrees that it has procured and will maintain during the term of this Agreement, such insurance as will protect it from claims under workers' compensation acts, claims for damages because of bodily injury including personal injury, sickness or disease or death of any of its employees or of any person other than its employees, and from claims or damages because of injury to or destruction of property including loss of use resulting therefrom; and such insurance will provide for coverage in such amounts as set forth below.

B. Consultant agrees to hold harmless, defend and indemnify City from and against liability to third parties, to the extent caused by the negligent acts, errors or omissions of Consultant, its employees, subcontractors, and consultants.

9.2. Minimum Requirements

A. Commercial General Liability Insurance. The Consultant shall secure and maintain during the period of this agreement and for such additional time as work on the project is being performed, Commercial General Liability Insurance issued to and covering the liability of the Consultant with respect to all work performed by it and all its subcontractors under the agreement, to be written on a comprehensive policy form. This insurance shall be written in amounts not less than $1,000,000 for each occurrence and aggregate for personal injury including death and bodily injury and $1,000,000 for each occurrence and aggregate for property damage. This policy of insurance shall name the City of Pueblo, its agents, officers and employees as additional insureds. The policy shall also provide coverage for contractual liability assumed by Consultant under the provisions of the agreement.

B. Comprehensive Automobile Liability Insurance. The Consultant shall procure and maintain during the period of the agreement and for such additional time as work on the project is being performed, Comprehensive Automobile Liability Insurance. This insurance shall be written with limits of liability for and injury to one person in any single occurrence of not less than $350,000 and for any injury to two or more persons in any single occurrence of not less than $1,000,000. Alternate coverage of combined single limit, each accident, in an amount of not

less than $1,000,000 may be accepted at the discretion of the Purchasing Director. This insurance shall include uninsured/underinsured motorist coverage and shall protect the Consultant from any and all claims arising from the use both on and off the site of the project of automobiles whether owned, leased, hired or used by Consultant.

C. Workers' Compensation Insurance complying with statutory requirements in Colorado and in any other state or states where the work is performed. The Workers' Compensation Insurance policy shall contain an endorsement waiving subrogation against the City.

D. Professional Liability Insurance with coverage of not less than $1,000,000 in a form and with a deductible acceptable to City.

9.3. Governmental Immunity

Liability for claims for injuries to persons or property arising from the negligence of the City, its departments, boards, commissions committees, bureaus, offices, employees and officials shall be controlled and limited by the provisions of the Colorado Governmental Immunity Act, §24-10-101, et seq., C.R.S.; the Federal Tort Claims Act, 28 U.S.C. Pt. VI, Ch. 171 and 28 U.S.C. 1346(b). No term or condition of this Agreement shall be construed or interpreted as a waiver, express or implied, of any of the immunities, rights, benefits, protections, or other provisions, contained in these statutes.

10. ACCESSIBILITY

The Americans with Disabilities Act (ADA) provides that it is a violation of the ADA to design and construct a facility for first occupancy later than January 26, 1993, that does not meet the accessibility and usability requirements of the ADA except where an entity can demonstrate that it is structurally impractical to meet such requirements. The Consultant therefore, will use its best reasonable professional efforts to implement applicable ADA requirements and other federal, state, and local laws, rules codes, ordinances and regulations as they apply to the Project.

11. IMMIGRATION REFORM AND CONTROL ACT OF 1986

Consultant certifies that it has complied with the United States Immigration Reform and Control Act of 1986. Consultant represents and warrants that to the extent required by said Act, all persons employed by Consultant for performance of this Agreement have completed and signed Form I-9 verifying their identities and authorization for employment.

12. PERA LIABILITY

The Consultant shall reimburse the City for the full amount of any employer contribution required to be paid by the City of Pueblo to the Public Employees' Retirement Association ("PERA") for salary or other compensation paid to a PERA retiree performing contracted services for the City under this Agreement. The Consultant shall complete the Colorado PERA Questionnaire and the completed form shall be included as an Additional Information of the signed Agreement.

13. SCHEDULES

The following Schedules are attached to and made a part of this Agreement:

- Schedule 1 - "Scope of Services" consisting of 4 pages.
- Schedule 2 - "Fee Schedule" consisting of 1 page.
- Schedule 3 - "Work Schedule" consisting of 1 page.
- Schedule 4 - "Identification of Personnel, Subcontractors, and Task Responsibility" consisting of 1 page.

14. SIGNATURE

A. This Agreement and all other documents contemplated hereunder may be executed using electronic signatures with delivery via facsimile transmission, by scanning and transmission of electronic files in Portable Document Format (PDF) or other readily available file format, or by copy transmitted via email, or by other electronic means and in one or more counterparts, each of which shall be: (1) an original, and all of which taken together shall constitute one and the same agreement, (2) a valid and binding agreement and fully admissible under state and federal law, and (3) enforceable in accordance with its terms.

B. This Agreement, together with all Project Documents incorporated by reference , constitutes the entire Agreement between City and Contractor with respect to their subject matter, and may not be amended a modified except by written document signed by both parties.

IN WITNESS WHEREOF the parties hereto have made and executed this Agreement as of the day and year first above written.

CITY OF PUEBLO, A MUNICIPAL CORPORATION

By_____
Naomi Hedden, Director of Purchasing

Attest_____
Marisa Stoller, City Clerk

BALANCE OF APPROPRIATION EXISTS FOR THIS AGREEMENT AND FUNDS ARE AVAILABLE.

_____
Danny Nunn, Interim Finance Director

RAFTELIS FINANCIAL CONSULTANTS, INC.

By_____
Name/Title:_____

[SEAL]

APPROVED AS TO FORM
DEPARTMENT OF LAW

_____
Robert Jagger, Deputy City Attorney

Attachments: Schedules 1 – 4 and Additional Information for Agreement

Schedule 1

Scope of Services

Excerpt from Consultant Revised Proposal submitted November 11, 2024

Proposed Approach and Scope of Work

The following tasks define our proposed approach and scope of work. The tasks are structured to provide interactions with City staff throughout the Study to ensure results meet expectations of City staff and policymakers. It should be noted that while we have listed these tasks consecutively, some tasks will overlap and be conducted concurrently.

Following the initial stages of the Study and the ongoing efforts by City staff, additional assistance may be requested by the City related to public outreach, education, engagement and communication. Raftelis can provide critical support in this area in terms of communication program/strategy development and execution and has experience providing similar

TASK 1 - PROJECT INITIATION AND PROJECT MANAGEMENT

The project initiation task will begin the study so that it progresses in an efficient and deliberate manner. Task 1 will include the collection of all relevant data and a Project Initiation Workshop completed with City staff. This task also includes project management activities to be completed throughout the duration of the project.

Task 1.1 – Data Collection and Review

The purpose of this task is to gather relevant information, documents, and analyses that will be required to conduct the Study. As part of this task, a detailed data request list will be prepared and submitted to City staff.

Task 1.2 – Project Initiation Workshop

Raftelis will facilitate a virtual Project Initiation Workshop to start the Study. This workshop will provide a solid foundation for the project and serve as a forum in which City staff can meet the Raftelis Project Team and provide input on study expectations, study issues, project approach, scope, schedule, and priorities.

Task 1.3 – Project Management

Raftelis will complete project management activities including coordination with the City, internal resource and project planning, and administrative project management activities including invoicing, project schedule, and project planning.

TASK 2 - REVENUE REQUIREMENTS AND FINANCIAL PLAN

The City's stated intent is to limit the Street Utility revenue requirements to those necessary to administer and operate the Street Utility, recurring administration, customer service and billing

expenses, fund the City franchise fee of 10% of utility revenues and fund approximately $5.0M in annual street repair and replacement capital requirements.

Raftelis will evaluate the Street Utility Enterprise Funds as a "stand-alone" fund separate from other public works and street related activities funded by the City's General Fund. The Street Utility Enterprise Fund financial planning model is anticipated to be set up with a 10-year 2024 through 2033 forecast period and be used for Street Utility financial planning and rate setting. As necessary, the financial planning will include additional special purpose sub funds.

Task 2.1 – Survey Transportation Utility Customer Class Rate Practices

Raftelis will survey up to ten transportation utility customer class and rate practices for residential and non-residential customers. We will include any Colorado examples we locate, including the City of Loveland street utility practices. The survey will be documented within a single technical memorandum and included as part of the overall study findings detailed in the report and presentation to City Council.

Task 2.2 – Customer Account and Demands Analysis

Raftelis will incorporate more recent U.S. Census data and/or local City data as well as ITE Trip Generation Manual trip generation rates by different land uses. The ITE data can be used as a proxy for the use of City streets by different residential and non-residential land uses and basis for varying Street Utility rates. In addition to the reported trip generation information compiled in the ITE Trip Generation Manual, there are other considerations including compiling multiple land uses into a single category as well as adjusting for pass-by trips (e.g., someone stops at a convenience store on the way home from work and the trip-end is not a separate trip). Residential customer accounts, residential dwelling units and non-residential impervious square feet will be compiled in working with City staff for purposes of totaling current and future customers for cost allocation, revenue forecasting and rate purposes. If updated customer information is not readily available, Raftelis may work with City staff to update the 2018 Study data increasing for growth.

Task 2.3 – Revenue Requirements and Financial Plan

The components of the Model include annual forecasts of customer accounts and units of service and revenue requirements following the Street Utility implementation in 2025. Revenue requirements include O&M expenses, debt service (if any), capital project costs, debt service coverage requirements, reserve fund contributions or use, and additional annual costs associated with a 10-year financial planning period. Raftelis proposes to evaluate a 10-year financial planning period to identify requirements over a 2024 through 2033 study period as previously discussed.

The Models are used to develop and project revenue requirements over the study period and incorporate operational costs, street repair capital costs (including pay-as-you-go capital and debt funded option for planning purposes), and reserve contributions. The requirements are funded by Street Utility rate revenues and revenues from miscellaneous sources.

Projecting revenue requirements, customer accounts, and units of service allows a utility to calculate overall rate revenue adjustments necessary to ensure revenue sufficiency over the 10-

year planning period. Raftelis will utilize the 2025 anticipated O&M and capital project costs provided by the City and update them for inflation forecasting annual rate revenue requirements each year of the study period.

The cash flow worksheet in the Models incorporates revenues generated from different sources, expenses needed to maintain the utility system, any transfers in and out of the operating, capital, and/or special purpose or reserve fund(s), and reserve requirements for the Street Utility. Recommended financial planning criteria or "triggers" will be incorporated within the Models to assist the City in identifying future rate or revenue adjustments. While the ability to adjust Street Utility rates will be included, it is anticipated that the initial rates will remain unchanged for at least three to five years before adjustments are anticipated.

The cash flow analysis will provide the ability to assess the long-term revenue sufficiency of current and proposed rate revenue adjustments to provide sustainable funding for utility operations.

Task 2.4 – Financial Plan Workshop

Following the development of the preliminary financial plan and study period revenue requirements forecast, Raftelis with facilitate a virtual Financial Planning Workshop at City offices to review and refine the preliminary financial planning model. A meeting memorandum will be developed summarizing the results of the Financial Planning Workshop. The outcomes of the workshop will be integrated within the Street Utility financial planning model prior to finalizing test-year revenue requirements included in Task 3.

TASK 3 – COST ALLOCATION AND RATE DESIGN

Raftelis will update the cost allocation and rate design model components anticipating a 2025 test-year. The cost allocation model will allocate annual Street Utility revenue requirements to residential and non-residential customer units of service for the purposes of developing monthly Street Utility rates. We will work closely with City staff in developing the cost allocation and rate design model components leveraging the work being completed in the 2018 Rate Study.

Task 3.1 – Cost Allocation Analysis

Raftelis will translate the annual revenue requirements into a cost per unit of existing residential and non-residential land uses. The allocated costs will reflect the system unit cost of service for each service category. We will work with City staff to review and refine functional areas and service categories prior to finalizing the analysis for use in Task 3.3.

Task 3.2 – Street Utility Rates

Raftelis apply the outcomes of the Task 3.1 cost analysis in developing equitable monthly Street Utility rates. The allocated test-year customer class revenue requirements will reflect equitable allocation of the unit cost of service by service category and each customer class proportional impact to the overall Street Utility revenue requirements. Residential customer rates are anticipated to be assessed per dwelling unit while non-residential customer rates, which will vary

by land use, are anticipated to be assessed per 1,000 square feet. The proposed rates will be reviewed and refined working with City staff.

Task 3.3 – Customer Bill Impacts

Customer bill impacts for residential customers per dwelling unit and non-residential customers varying by land use will be developed. For each non-residential land use, customer bill impacts will be prepared to summarize the impact to average, low and high customers within each classification. The top 30 non-residential customer bills and impacted users will be summarized showing the impact to the largest users across all non-residential customer classifications.

Task 3.4 – Cost Allocation and Rate Design Workshop

Following the development of the preliminary cost allocation analysis for the 2025 test-year. Raftelis will facilitate a Cost Allocation and Rate Design Workshop at City offices to review the draft financial planning model, preliminary cost allocation and rate design results. A meeting memorandum will be developed summarizing the results of this Workshop.

TASK 4 - FINDINGS AND RECOMMENDATIONS

Interim and final study findings and recommendations will be documented and communicated during this task.

Task 4.1 – City Council Meetings

Raftelis will present overall study results and recommendations to the City Council during a single (1) meeting or work session or other Council meeting. The presentation will provide proposed 2025 Street Utility rates and projected annual rate revenue adjustments.

Task 4.2 – Study Report

Raftelis will prepare a single Draft Study Report. Following City staff review and comment, Raftelis will prepare a Final Report and deliver an electronic version to the City.

Schedule 2

Fee Schedule

Excerpt from Consultant Revised Proposal submitted November 11, 2024

Not-to-Exceed Fee

Raftelis proposes to complete the proposed scope of work for a not-to-exceed fee of $44,999.00 which includes reimbursable expenses related to up to two (2) trips I will take to the City for workshops and/or City Council presentation(s). The table below summarizes the fee estimate for the four tasks previously detailed.

Study Tasks	Web Meetings	In-person Meetings	Hours									Total Fees & Expenses
			TC	AR	TJ	JD	MW	MS	CS	Admin	Total	
1. Project Initiation & Management	1	0	2	8	8	8	0	0	0	0	26	**$8,180**
2. Revenue Requirements & Financial Plan	1	0	0	6	16	16	0	0	0	0	38	**$11,580**
3. Cost Allocation and Rate Design	0	1	2	12	24	0	0	0	0	0	38	**$12,070**
4. Findings and Recommendations	0	1	4	16	16	0	0	0	5	5	46	**$13,170**
Total Meetings / Hours	**2**	**2**	**8**	**42**	**64**	**24**	**0**	**0**	**5**	**5**	**148**	
Hourly Billing Rate			**$360**	**$320**	**$285**	**$295**	**$285**	**$220**	**$160**	**$100**		
Total Professional Fees			**$2,880**	**$13,440**	**$18,240**	**$7,080**	**$0**	**$0**	**$800**	**$500**	**$42,940**	
			Total Fees									**$42,940**
			Total Expenses									**$2,059**
			Total Fees & Expenses									**$44,999**

TC - Todd Cristiano
AR - Andrew Rheem
TJ - Theresa Jurotich
JD - Jeffrey Duke
MW - Matt Wittern
MS - Makenna Sturgeon
CS - Creative Services
Admin - Administration

Schedule 3

Work Schedule

Excerpt from Consultant Revised Proposal submitted November 11, 2024

Project Schedule

Raftelis proposes to complete the proposed scope of work over an approximately 5-month schedule following a notice-to-proceed in November 2024. Draft study findings are anticipated to be presented to City Council in February or March 2025. The project schedule anticipates implementation in 2025 or January 1, 2026 of the proposed rates pending direction and input from City Council following the presentation of study findings and recommendations.

Schedule 4

Identification of Personnel, Subcontractors, and Task Responsibility

Excerpt from Consultant Revised Proposal (Project Team) submitted November 11, 2024

Andrew Rheem will serve as the Project Director for this engagement. Andrew has completed similar utility studies for communities throughout Colorado and the United States over his 20-year career. He has helped communities develop and implement new utilities such as a Street Light Utility created and implemented in 2012 for Salt Lake City and a Stormwater Utility developed and implemented in 2008 for El Paso Water Utilities. Theresa Jurotich will serve as Project Manager for this engagement having provided similar assistance to municipal utilities throughout her consulting career. Todd Cristiano will serve as a senior level subject matter expert (SME) and project resource with over 25 years' experience assisting municipalities develop funding mechanisms. We will be assisted by other qualified consultants.

Additional Information for Agreement

Certificate of Good Standing

PERA Questionnaire - To be added prior to agreement signature

Insurance Certificate(s) – To be added prior to agreement signature

Colorado
Secretary of State
Jena Griswold

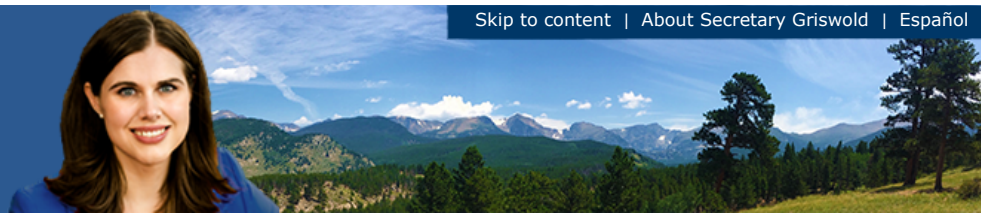

Summary

Details			
Name	Raftelis Financial Consultants, Inc.		
Status	Good Standing	**Formation date**	05/25/2018
ID number	20181427052	**Form**	Foreign Corporation
Periodic report month	May	**Jurisdiction**	North Carolina
Principal office street address	227 W Trade St Ste 1400, Charlotte, NC 28202, US		
Principal office mailing address	227 W Trade St Ste 1400, Charlotte, NC 28202, US		

Registered Agent	
Name	Richard Dean Giardina
Street address	6903 S Espana Way, Aurora, CO 80016, US
Mailing address	6903 S Espana Way, Aurora, CO 80016, US

Filing history and documents

Trade names

Get a certificate of good standing

Get certified copies of documents

File a form

Set up secure business filing

Subscribe to email notification

Unsubscribe from email notification

Subscribe to text notification

Unsubscribe from text notification

Back

OFFICE OF THE SECRETARY OF STATE
OF THE STATE OF COLORADO

CERTIFICATE OF FACT OF GOOD STANDING

I, Jena Griswold, as the Secretary of State of the State of Colorado, hereby certify that, according to the records of this office,

Raftelis Financial Consultants, Inc.

is an entity formed or registered under the law of North Carolina, has complied with all applicable requirements of this office, and is in good standing with this office. This entity has been assigned entity identification number 20181427052 .

This certificate reflects facts established or disclosed by documents delivered to this office on paper through 10/24/2024 that have been posted, and by documents delivered to this office electronically through 10/28/2024 @ 14:32:20 .

I have affixed hereto the Great Seal of the State of Colorado and duly generated, executed, and issued this official certificate at Denver, Colorado on 10/28/2024 @ 14:32:20 in accordance with applicable law. This certificate is assigned Confirmation Number 16513108 .

Secretary of State of the State of Colorado

**********End of Certificate**********

Notice: A certificate issued electronically from the Colorado Secretary of State's website is fully and immediately valid and effective. However, as an option, the issuance and validity of a certificate obtained electronically may be established by visiting the Validate a Certificate page of the Secretary of State's website, https://www.coloradosos.gov/biz/CertificateSearchCriteria.do entering the certificate's confirmation number displayed on the certificate, and following the instructions displayed. Confirming the issuance of a certificate is merely optional and is not necessary to the valid and effective issuance of a certificate. For more information, visit our website, https://www.coloradosos.gov click "Businesses, trademarks, trade names" and select "Frequently Asked Questions."

Docusign Envelope ID: 1DDD049B-FCF9-4559-95A9-751907C4636E

City Clerk's Office Item # M6

Background Paper for Proposed Resolution

COUNCIL MEETING DATE: November 11, 2024

TO: President Mark Aliff and Members of City Council

CC: Mayor Heather Graham

VIA: Marisa Stoller, City Clerk

FROM: Andrew Hayes, Public Works Director

SUBJECT: A RESOLUTION AUTHORIZING THE TRANSFER OF PREVIOUSLY BUDGETED AND APPROPRIATED FUNDS IN THE AMOUNT OF $35,788.15 FROM PROJECT ACCOUNT WW9999 TO WW2305 AND APPROVING AND AUTHORIZING THE PURCHASING AGENT TO EXECUTE AMENDMENT NO. 1 OF THE AGREEMENT FOR PROFESSIONAL ENGINEERING SERVICES BETWEEN THE CITY OF PUEBLO, A COLORADO MUNICIPAL CORPORATION, AND SHORT-ELLIOTT-HENDRICKSON, INC., IN THE AMOUNT OF $35,788.15 FOR 23-046, DESIGN OF FUTURE WASTEWATER PRETREATMENT BUILDING.

SUMMARY:

This Resolution authorizes the transfer of previously budgeted and appropriated funds from project account WW9999 to WW2305 - Pretreatment Building Project, approves Amendment No. 1 to the Professional Engineering Agreement awarded to Short-Elliott-Hendrickson, Inc. (SEH), in the amount of $35,788.15 for Project No. 23-046, Design of Future Wastewater Pretreatment Building.

PREVIOUS COUNCIL ACTION:

Ordinance No. 10502, approved July 10, 2023, created account Project WW2305 for the Pretreatment Building Project, transferred funds in the amount of $150,000 from account Project WW9999 to WW2305, budgeted and appropriated funds totaling $150,000 for the project, and approved an agreement for Professional Engineering and Architectural Services.

BACKGROUND:

The project consists of renovating the existing Wastewater Headworks Building for it to be adapted to the Wastewater Pretreatment Building. The project renovation includes one (1) management office space, a work area for five cubicles, a cleaning and calibration work area, one (1) break room, one (1) unisex ADA accessible restroom, a

Docusign Envelope ID: 1DDD049B-FCF9-4559-95A9-751907C4636E

conference room, and a vehicle bay that accommodates two (2) vehicles. In addition, the building requires upgrade/redesign of the mechanical and electrical systems.

The Wastewater Headworks Building was constructed in 1937 and comprises approximately 3,300 sq. ft. (excluding the basement). The building is constructed of brick and concrete and was utilized as the original headworks building for the old plant.

The proposed Amendment will expand the scope of work for sump pump considerations, design for bathroom/locker room/basement design, and civil site improvements.

FINANCIAL IMPLICATIONS:

Funding for Amendment No. in the amount of $35,788.15 will be transferred from account WW9999 to WW2305 and be paid from account WW2305, Pretreatment Building Project.

BOARD/COMMISSION RECOMMENDATION:

None.

STAKEHOLDER PROCESS:

None.

ALTERNATIVES:

Denial of this resolution will cancel the design of the additional improvements necessary to complete the design.

RECOMMENDATION:

Approval of the Resolution.

ATTACHMENTS:

1. 23-046 SEH Amendment No 1

Docusign Envelope ID: 1DDD049B-FCF9-4559-95A9-751907C4636E

RESOLUTION NO. 15810

A RESOLUTION AUTHORIZING THE TRANSFER OF PREVIOUSLY BUDGETED AND APPROPRIATED FUNDS IN THE AMOUNT OF $35,788.15 FROM PROJECT ACCOUNT WW9999 TO WW2305 AND APPROVING AND AUTHORIZING THE PURCHASING AGENT TO EXECUTE AMENDMENT NO. 1 OF THE AGREEMENT FOR PROFESSIONAL ENGINEERING SERVICES BETWEEN THE CITY OF PUEBLO, A COLORADO MUNICIPAL CORPORATION, AND SHORT-ELLIOTT-HENDRICKSON, INC., IN THE AMOUNT OF $35,788.15 FOR 23-046, DESIGN OF FUTURE WASTEWATER PRETREATMENT BUILDING.

WHEREAS, Project No. 23-046 Design of Future Wastewater Pretreatment Building Project was awarded to Short-Elliott-Hendrickson, Inc., on June 27, 2023; and,

WHEREAS, additional design and engineering work contemplated by Amendment No. 1 is needed; and,

WHEREAS, it is in the best interest of the City of Pueblo to proceed with and complete such design in the manner herein provided; NOW, THEREFORE,

BE IT RESOLVED BY THE CITY COUNCIL OF PUEBLO, that

SECTION 1.

Previously budgeted and appropriated funds in the amount of $35,788.15 are hereby transferred from Project Account WW9999 into Project Account WW2305 - Pretreatment Building Project

SECTION 2.

Amendment No. 1, by and between the City of Pueblo, a Colorado Municipal Corporation, and Short-Elliott-Hendrickson, Inc., a Colorado Corporation, a copy of which is attached hereto, having been approved as to form by the City of Pueblo Attorney, is hereby approved, and City Council authorizes the additional work contemplated by Amendment No. 1 to be performed in the amount of $35,788.15.

SECTION 3.

Funds in the amount of $35,788.15 will be paid from Project WW2305, Pretreatment Building Project.

SECTION 4.

The Purchasing Agent is hereby authorized to execute Amendment No. 1 on behalf of the City of Pueblo, a Colorado Municipal Corporation, and the City Clerk shall affix the seal of the City thereto and attest the same.

Docusign Envelope ID: 1DDD049B-FCF9-4559-95A9-751907C4636E

SECTION 5.

The officers of the City are authorized to perform any and all acts consistent with this Resolution to implement the policies and procedures described herein.

SECTION 6.

This Resolution shall become effective immediately upon passage and approval.

INTRODUCED: November 11, 2024

BY: Regina Maestri
MEMBER OF CITY COUNCIL

APPROVED: DocuSigned by: Mark Alliff B7A4F51823AB462...
PRESIDENT OF CITY COUNCIL

ATTESTED BY: DocuSigned by: 7C02EBDEFC3D43C...
CITY CLERK

AMENDMENT NO. 1 TO THE PROFESSIONAL ENGINEERING AND ARCHITECTURAL SERVICES AGREEMENT BY AND BETWEEN CITY OF PUEBLO AND SHORT ELLIOTT HENDRICKSON, INCORPORATED

1. INTRODUCTION

This Amendment No. 1 to the Professional Engineering and Architectural Services Agreement ("Amendment") is executed to be effective as of the _____ day of _____, 20____, by and between the City of Pueblo, a Colorado Municipal Corporation ("City") and Short Elliott Hendrickson, Incorporated, a Minnesota Corporation authorized to do business in the State of Colorado ("Consultant"). City and Consultant are sometimes referred to herein as a "Party" and collectively, as the "Parties."

2. PROJECT STATEMENT

WITNESSETH THAT:

WHEREAS, City and Consultant entered into that certain Professional Engineering and Architectural Services Agreement dated June 27, 2023 for Bid 23-046 Design of Future Wastewater Pretreatment Building (the "Agreement").

WHEREAS, City and Consultant desire to amend the Agreement pursuant to the provisions set forth herein.

NOW, THEREFORE, in consideration of the foregoing premises, the mutual promises set forth herein and other good and valuable consideration, the receipt and adequacy of which is hereby acknowledged, City and Consultant hereby agree to the following conditions.

3. AGREEMENT

A. The Agreement is amended by expanding the scope of work to include the following additional services:

   1. Consultant shall provide additional work to include sump pump considerations, design for bathroom/locker room/basement design, and civil site improvements as identified in Attachment A.

B. Attachment A to this Amendment No. 1 shall be additional work as agreed upon by Consultant and City, and Consultant shall complete the work items as generally described in said Attachment A in accordance with the terms of the Agreement.

C. With respect to services provided under the Amendment No. 1, the fee schedule attached as Attachment B to this Amendment No. 1 shall apply to compensation payable to Consultant. The aggregate compensation payable to the Consultant for performance of the

additional services authorized by this Amendment No. 1 shall not exceed the maximum amount of $35,788.15 as set forth in the Attachment B and notwithstanding whether the service is billed as Time and Material at the rates provided in Attachment B.

1. City must respond in writing with written approval prior to Consultant beginning work.

D. This Amendment shall be binding upon and inure to the benefit of the Parties hereto and their respective successors and assigns.

E. Except as expressly modified by this Amendment No. 1, the Agreement shall remain in full force and effect. Except as modified by this Amendment No. 1, any obligations to be performed under the Agreement by either party are not waived nor excused in any manner but shall be performed in accordance with the terms and conditions of the Agreement as it existed prior to this Amendment No. 1.

F. This Amendment may be executed in one or more counterparts, each of which shall be deemed an original and all of which shall constitute one and the same document with the same effect as if all Parties had signed the same original. The Parties further agree that transmission of this Amendment by any electronic format, telecopy or via email in a PDF format, shall be deemed transmission of the original Amendment for all purposes. Electronic signatures shall be deemed valid and binding to the same extent as the original

4. SIGNATURE SECTION

IN WITNESS WHEREOF, the parties hereto have caused this instrument to be executed the day and year first above written.

CITY OF PUEBLO, A MUNICIPAL CORPORATION

By_____
Naomi Hedden, Director of Purchasing

Attest_____
Marisa Stoller, City Clerk

SHORT ELLIOTT HENDRICKSON, INCORPORATED

By_____
James Hayson, Principal-In-Charge

[SEAL]

BALANCE OF APPROPRIATION EXISTS FOR THIS AGREEMENT AND FUNDS ARE AVAILABLE

_____
Danny Nunn, Interim Finance Director

APPROVED AS TO FORM
DEPARTMENT OF LAW

_____
Robert Jagger, Deputy City Attorney

Attachments: Attachment A, Attachment B, and Additional Information for Amendment

Attachment A

Scope of Work

Excerpt from Consultant Proposal dated October 15, 2024, Page 2

Data Description of Amendment - See below for major items break down.

Following the last meetings on Monday July 28, 2024 and Friday October 4th, I am writing to formally request an amendment to our current contract and additional funds to address several critical issues that were discussed. To address these issues effectively and ensure the project's success, we are requesting additional funds. The estimated additional cost is $35,788.15. This will cover the following:

Sump Pump Considerations: We need to conduct a design study and investigate the necessity of installing a sump pump below the newly added lower level, which was not part of our initial scope of work. The original plan aimed to fill the pit with structural material and pour a concrete floor for an unoccupied basement storage area. However, SEH had to revise this approach to include a structural floor above the pit, due to the absence of anticipated interior borings, possibly because they were infeasible and risked damaging the existing slab. SEH assumed that draining the area would resolve any water infiltration issues, never considering dewatering as part of the design. The pit was initially drained, but SEH did not have the opportunity to evaluate it when empty. In a recent meeting, it was discussed that the client suspects that items or pipes in the lower level were not properly sealed after decommissioning and that the pipeing is pressurized causing back flows into the pit. The next steps involve pumping out the water again and monitoring the area to locate the source of the leaks to assess the feasibility and efficacy of a sump pump system. If additional unexpected repairs are needed, future add-ons will be required. This additional fee covers:

- Infill and patch the penetration points and seal the walls/floors to waterproof interior.
- The existing sump pit will be reused. Installation of new sump pump as requested.

Bathroom, Locker Room, and Basement Design: The RFP specified, and our proposal included, one ADA-compliant unisex restroom. The basement design, not identified in the RFP, was originally intended for storage and considered unoccupied. During schematic design, locker rooms/showers were added. Addressing the size and scope discrepancies from the original proposal necessitates an additional service fee. This covers:

- Design study including one option and one round of design comments and revisions for adding two bathrooms, two showers, and storage lockers in the basement (to serve two to three people).
- Incorporate emergency egress paths and fire protection systems as required by the IFC and IBC.
- Design/select flooring, ceiling, lighting and wall finishes.
- Install low-flow, water-efficient fixtures to comply with the 2021 IECC water usage requirements. Also, any necessary attachments for the piping to the underside of the new slab
- Ensure adequate mechanical ventilation and exhaust systems are in place in compliance with IMC.
- Structural to review additional weight of added restroom/shower to their flooring slab design.

Civil Site Improvements: While the city was responsible for providing a design survey with existing site utility information, SEH was given as-constructed maps instead and required to integrate utility details into the city-provided survey. Some utilities remain undelivered. Consequently, SEH performed utility coordination outside the initial scope of services.

Reassessment of Time and Cost: Generally, we need to reassess both the time and costs due to a six-month delay in receiving geo-technical data. This delay has impacted our overall project timeline and budget. Hence, we propose a 5% increase on the remaining portion of the initial budget, using our last invoice dated 08-17-2024 as a baseline, excluding the above-mentioned additional services.

Attachment B

Fee Schedule

Excerpt from Consultant Proposal dated October 15, 2024, Pages 4 – 5

Pueblo Waste Water Interior Renovation CA1		Project Management	Design Items		Civil	Other	
SEH Building a Better World for All of Us® Engineers | Architects | Planners | Scientists Labor Category	Labor Rate	Scheduling, Internal Team Management Coordination & Accounting	Sump Pump Considerations	Bathroom, Locker Room and Basement Design	Civil Site Improvements	Reassessment of Time and Cost	Total Hours
Architect & Project Management (Matthew Noe)	$195.00	6	2	16			24
Graduate Architect (Maria Marinelli)	$120.00		8	64			72
Administrative Professional (Linsay Sullivan Gutierrez)	$105.00	2					2
Engineer Electrical (Naysan Sahba)	$145.00		10	24			34
Engineer Mechanical & Plumbing (Jackson Pritchard)	$165.00		16	24			40
Senior Engineer Civil (Jimmie Hayson)	$225.00		3		3		6
Graduate Engineer Civil (Craig Hayson)	$125.00				4		4
Senior Engineer Structural (Steven Halewski)	$195.00		4	4			8
Engineer Structural (Wilbert Torres)	$165.00		16	16			32
Total Hours		**8**	**59**	**148**	**7**		222
Total Labor Cost		**$1,380.00**	**$9,535.00**	**$21,660.00**	**$1,175.00**	**$2,038.15**	**$35,788.15**
Total Cost		**$1,380.00**	**$9,535.00**	**$21,660.00**	**$1,175.00**	**$2,038.15**	**$35,788.15**

SCHEDULE 2

Updated Fee Schedule
Original Excerpt Taken from Consultant Proposal
Submitted on May 3, 2023

SEH HOURLY BILLABLE RATES – 2025

CLASSIFICATION - OFFICE STAFF	BILLABLE RATE*1
Principal	$185 - $320
Project Manager	$150 - $280
Senior Project Specialist	$155 - $260
Project Specialist	$110 - $205
Senior Professional Engineer I	$130 - $210
Senior Professional Engineer II	$155 - $265
Professional Engineer	$115 - $195
Graduate Engineer	$95 - $160
Senior Architect	$135 - $250
Architect	$115 - $180
Graduate Architect	$95 - $130
Senior Landscape Architect	$130 - $200
Landscape Architect	$105 - $145
Graduate Landscape Architect	$95 - $120
Senior Scientist	$145 - $205
Scientist	$100 - $160
Graduate Scientist	$90 - $125
Senior Planner	$145 - $250
Planner	$115 - $180
Graduate Planner	$100 - $140
Senior GIS Analyst	$120 - $205
GIS Analyst	$110 - $175
Project Design Leader	$135 - $215
Lead Technician	$120 - $200
Senior Technician	$100 - $160
Technician	$70 - $135
Graphic Designer	$100 - $170
Administrative Professional	$60 - $150

CLASSIFICATION - FIELD STAFF	BILLABLE RATE*1
Professional Land Surveyor	$125 - $190
Lead Resident Project Representative	$105 - $185
Senior Project Representative	$105 - $160
Project Representative	$85 - $145
Survey Crew Chief	$95 - $160
Survey Instrument Operator	$65 - $115

*1The actual rate charged is dependent upon the hourly rate of the employee assigned to the project. The rates shown are subject to change.

Effective: September 1, 2024

Additional Information for Agreement

Certificate of Good Standing

PERA Questionnaire

Insurance Certificate(s)

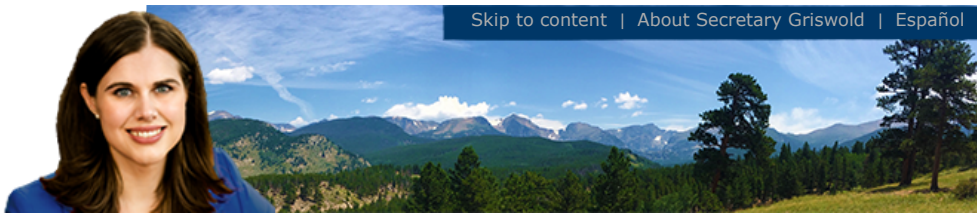

Summary

Details			
Name	Short-Elliott-Hendrickson, Incorporated		
Status	Good Standing	**Formation date**	01/22/2001
ID number	20011014839	**Form**	Foreign Corporation
Periodic report month	January	**Jurisdiction**	Minnesota
Principal office street address	3535 Vadnais Center Drive, St. Paul, MN 55110, United States		
Principal office mailing address	3535 Vadnais Center Drive, St. Paul, MN 55110, United States		

Registered Agent	
Name	United Agent Group Inc.
Street address	155 E. Boardwalk #490, Fort Collins, CO 80525, United States
Mailing address	155 E. Boardwalk #490, Fort Collins, CO 80525, United States

Filing history and documents

Trade names

Get a certificate of good standing

Get certified copies of documents

File a form

Set up secure business filing

Subscribe to email notification

Unsubscribe from email notification

Subscribe to text notification

Unsubscribe from text notification

Back

OFFICE OF THE SECRETARY OF STATE
OF THE STATE OF COLORADO

CERTIFICATE OF FACT OF GOOD STANDING

I, Jena Griswold, as the Secretary of State of the State of Colorado, hereby certify that, according to the records of this office,

Short-Elliott-Hendrickson, Incorporated

is an entity formed or registered under the law of Minnesota, has complied with all applicable requirements of this office, and is in good standing with this office. This entity has been assigned entity identification number 20011014839 .

This certificate reflects facts established or disclosed by documents delivered to this office on paper through 10/17/2024 that have been posted, and by documents delivered to this office electronically through 10/21/2024 @ 13:09:11 .

I have affixed hereto the Great Seal of the State of Colorado and duly generated, executed, and issued this official certificate at Denver, Colorado on 10/21/2024 @ 13:09:11 in accordance with applicable law. This certificate is assigned Confirmation Number 16490344 .

Secretary of State of the State of Colorado

**********End of Certificate**********

Notice: A certificate issued electronically from the Colorado Secretary of State's website is fully and immediately valid and effective. However, as an option, the issuance and validity of a certificate obtained electronically may be established by visiting the Validate a Certificate page of the Secretary of State's website, https://www.coloradosos.gov/biz/CertificateSearchCriteria.do entering the certificate's confirmation number displayed on the certificate, and following the instructions displayed. Confirming the issuance of a certificate is merely optional and is not necessary to the valid and effective issuance of a certificate. For more information, visit our website, https://www.coloradosos.gov click "Businesses, trademarks, trade names" and select "Frequently Asked Questions."

COLORADO PUBLIC EMPLOYEES RETIREMENT ASSOCIATION
SUPPLEMENTAL QUESTIONNAIRE TO BE ANSWERED BY
ANY BUSINESS PERFORMING SERVICES FOR THE CITY OF PUEBLO

Pursuant to section 24-51-1101(2), C.R.S., salary or other compensation from the employment, engagement, retention or other use of a person receiving retirement benefits (Retiree) through the Colorado Public Employees Retirement Association (PERA) in an individual capacity or of any entity owned or operated by a PERA Retiree or an affiliated party by the City of Pueblo to perform any service as an employee, contract employee, consultant, independent contractor, or through other arrangements, is subject to employer contributions to PERA by the City of Pueblo. Therefore, as a condition of contracting for services with the City of Pueblo, this document must be completed, signed and returned to the City of Pueblo:

(a) Are you, or do you employ or engage in any capacity, including an independent contractor, a PERA Retiree who will perform any services for the City of Pueblo? Yes_X_, No___. (If you answered "no" please proceed to signature section at bottom of this page.)

(b) If you answered "yes" to (a) above, please answer the following question: Are you an individual, sole proprietor or partnership, or a business or company owned or operated by a PERA Retiree or an affiliated party? For purposes of responding to this question, an "affiliated party" includes (1) any person who is the named beneficiary or cobeneficiary on the PERA account of the PERA Retiree; (2) any person who is a relative of the PERA Retiree by blood or adoption to and including parents, siblings, half-siblings, children, and grandchildren; (3) any person who is a relative of the PERA Retiree by marriage to and including spouse, spouse's parents, stepparents, stepchildren, stepsiblings, and spouse's siblings; and (4) any person or entity with whom the PERA Retiree has an agreement to share or otherwise profit from the performance of services for the City of Pueblo by the PERA Retiree other than the PERA Retiree's regular salary or compensation. Yes ____, No_X_.

If you answered "yes" please state which of the above entities best describes your business:
_____.

(c) If you answered "yes" to both (a) and (b), you agree to reimburse the City of Pueblo for any employer contribution required to be paid by the City of Pueblo to PERA for salary or other compensation paid to you as a PERA Retiree or paid to any employee or independent contractor of yours who is a PERA Retiree performing services for the City of Pueblo. You further authorize the City of Pueblo to deduct and withhold all such contributions from any moneys due or payable to you by the City of Pueblo under any current or future contract or other arrangement for services between you and the City of Pueblo.

Please provide the name, address, date of birth, and social security number of each such PERA Retiree. If more than two, please attach a supplemental list.

Name	Address	DOB	Social Security Number
Name	Address	DOB	Social Security Number

Failure to accurately complete, sign and return this document to the City of Pueblo may result in you being denied the privilege of doing business with the City of Pueblo.

Company Name: Short Elliott Hendrickson, Inc.

Authorized Signature: James D. Hayson Title: Principal

Printed Name: James D. Hayson Date: 06.04.2023

CERTIFICATE OF LIABILITY INSURANCE

10/1/2025

DATE (MM/DD/YYYY): 9/26/2024

THIS CERTIFICATE IS ISSUED AS A MATTER OF INFORMATION ONLY AND CONFERS NO RIGHTS UPON THE CERTIFICATE HOLDER. THIS CERTIFICATE DOES NOT AFFIRMATIVELY OR NEGATIVELY AMEND, EXTEND OR ALTER THE COVERAGE AFFORDED BY THE POLICIES BELOW. THIS CERTIFICATE OF INSURANCE DOES NOT CONSTITUTE A CONTRACT BETWEEN THE ISSUING INSURER(S), AUTHORIZED REPRESENTATIVE OR PRODUCER, AND THE CERTIFICATE HOLDER.

IMPORTANT: If the certificate holder is an ADDITIONAL INSURED, the policy(ies) must have ADDITIONAL INSURED provisions or be endorsed. If SUBROGATION IS WAIVED, subject to the terms and conditions of the policy, certain policies may require an endorsement. A statement on this certificate does not confer rights to the certificate holder in lieu of such endorsement(s).

PRODUCER
Lockton Companies, LLC
444 W. 47th Street, Suite 900
Kansas City MO 64112-1906
(816) 960-9000
kcasu@lockton.com

CONTACT NAME:
PHONE (A/C, No, Ext): FAX (A/C, No):
E-MAIL ADDRESS:

INSURER(S) AFFORDING COVERAGE	NAIC #
INSURER A: The Continental Insurance Company	35289
INSURER B: National Fire Insurance Co of Hartford	20478
INSURER C:	
INSURER D:	
INSURER E:	
INSURER F:	

INSURED
1467605 SHORT-ELLIOTT-HENDRICKSON, INCORPORATED
3535 VADNAIS CENTER DRIVE
ST. PAUL MN 55110-3507

COVERAGES **CERTIFICATE NUMBER:** 19626016 **REVISION NUMBER:** XXXXXXX

THIS IS TO CERTIFY THAT THE POLICIES OF INSURANCE LISTED BELOW HAVE BEEN ISSUED TO THE INSURED NAMED ABOVE FOR THE POLICY PERIOD INDICATED. NOTWITHSTANDING ANY REQUIREMENT, TERM OR CONDITION OF ANY CONTRACT OR OTHER DOCUMENT WITH RESPECT TO WHICH THIS CERTIFICATE MAY BE ISSUED OR MAY PERTAIN, THE INSURANCE AFFORDED BY THE POLICIES DESCRIBED HEREIN IS SUBJECT TO ALL THE TERMS, EXCLUSIONS AND CONDITIONS OF SUCH POLICIES. LIMITS SHOWN MAY HAVE BEEN REDUCED BY PAID CLAIMS.

INSR LTR	TYPE OF INSURANCE	ADDL INSD	SUBR WVD	POLICY NUMBER	POLICY EFF (MM/DD/YYYY)	POLICY EXP (MM/DD/YYYY)	LIMITS	
A	X COMMERCIAL GENERAL LIABILITY	Y	N	6079420587	10/1/2024	12/1/2025	EACH OCCURRENCE	$ 1,000,000
	CLAIMS-MADE X OCCUR						DAMAGE TO RENTED PREMISES (Ea occurrence)	$ 500,000
							MED EXP (Any one person)	$ 15,000
							PERSONAL & ADV INJURY	$ 1,000,000
	GEN'L AGGREGATE LIMIT APPLIES PER:						GENERAL AGGREGATE	$ 2,000,000
	POLICY X PRO-JECT X LOC						PRODUCTS - COMP/OP AGG	$ 2,000,000
	OTHER:							$
A	AUTOMOBILE LIABILITY	N	N	6079420699	10/1/2024	12/1/2025	COMBINED SINGLE LIMIT (Ea accident)	$ 1,000,000
	X ANY AUTO						BODILY INJURY (Per person)	$ XXXXXXX
	OWNED AUTOS ONLY / SCHEDULED AUTOS						BODILY INJURY (Per accident)	$ XXXXXXX
	HIRED AUTOS ONLY / NON-OWNED AUTOS ONLY						PROPERTY DAMAGE (Per accident)	$ XXXXXXX
								$ XXXXXXX
A	X UMBRELLA LIAB X OCCUR	N	N	6079420590	10/1/2024	12/1/2025	EACH OCCURRENCE	$ 10,000,000
	EXCESS LIAB CLAIMS-MADE						AGGREGATE	$ 10,000,000
	DED RETENTION $							$ XXXXXXX
B	WORKERS COMPENSATION AND EMPLOYERS' LIABILITY		Y	6079421254	10/1/2024	10/1/2025	X PER STATUTE / OTH-ER	
	ANY PROPRIETOR/PARTNER/EXECUTIVE OFFICER/MEMBER EXCLUDED? (Mandatory in NH) Y/N: N	N / A					E.L. EACH ACCIDENT	$ 1,000,000
	If yes, describe under DESCRIPTION OF OPERATIONS below						E.L. DISEASE - EA EMPLOYEE	$ 1,000,000
							E.L. DISEASE - POLICY LIMIT	$ 1,000,000

DESCRIPTION OF OPERATIONS / LOCATIONS / VEHICLES (ACORD 101, Additional Remarks Schedule, may be attached if more space is required)

RE: SEH NO. 172371 / 23-046 DESIGN OF FUTURE WW PRETREATMENT BLDG. CITY OF PUEBLO, ITS AGENTS, OFFICERS AND EMPLOYEES ARE ADDITIONAL INSURED ON GENERAL LIABILITY, AS REQUIRED BY WRITTEN CONTRACT AND SUBJECT TO THE TERMS AND CONDITIONS OF THE POLICY. WAIVER OF SUBROGATION IN FAVOR OF THE ADDITIONAL INSURED APPLIES ON WORKERS' COMPENSATION, AS REQUIRED BY WRITTEN CONTRACT AND WHERE ALLOWED BY LAW. COVERAGE IS SUBJECT TO THE TERMS AND CONDITIONS OF THE POLICY.

CERTIFICATE HOLDER

19626016
CITY OF PUEBLO, A MUNICIPAL CORPORATION
230 S. MECHANIC STREET
PUEBLO, CO 81003

CANCELLATION See Attachment

SHOULD ANY OF THE ABOVE DESCRIBED POLICIES BE CANCELLED BEFORE THE EXPIRATION DATE THEREOF, NOTICE WILL BE DELIVERED IN ACCORDANCE WITH THE POLICY PROVISIONS.

AUTHORIZED REPRESENTATIVE

Joseph M Amelio

© 1988-2015 ACORD CORPORATION. All rights reserved.

ACORD 25 (2016/03) The ACORD name and logo are registered marks of ACORD

CERTIFICATE OF LIABILITY INSURANCE

DATE (MM/DD/YYYY): 09/18/2024

THIS CERTIFICATE IS ISSUED AS A MATTER OF INFORMATION ONLY AND CONFERS NO RIGHTS UPON THE CERTIFICATE HOLDER. THIS CERTIFICATE DOES NOT AFFIRMATIVELY OR NEGATIVELY AMEND, EXTEND OR ALTER THE COVERAGE AFFORDED BY THE POLICIES BELOW. THIS CERTIFICATE OF INSURANCE DOES NOT CONSTITUTE A CONTRACT BETWEEN THE ISSUING INSURER(S), AUTHORIZED REPRESENTATIVE OR PRODUCER, AND THE CERTIFICATE HOLDER.

IMPORTANT: If the certificate holder is an ADDITIONAL INSURED, the policy(ies) must have ADDITIONAL INSURED provisions or be endorsed. If SUBROGATION IS WAIVED, subject to the terms and conditions of the policy, certain policies may require an endorsement. A statement on this certificate does not confer rights to the certificate holder in lieu of such endorsement(s).

PRODUCER
H. Robert Anderson and Associates, Inc.
8201 Norman Center Drive
Suite 220
Bloomington MN 55437

CONTACT NAME: Jeanne Danmeler
PHONE (A/C, No, Ext): (952) 893-1933 FAX (A/C, No): (952) 893-1819
E-MAIL ADDRESS:

INSURER(S) AFFORDING COVERAGE	NAIC #
INSURER A: XL Specialty Insurance Co.	37885
INSURER B:	
INSURER C:	
INSURER D:	
INSURER E:	
INSURER F:	

INSURED
Short-Elliott-Hendrickson, Incorporated
3535 Vadnais Center Drive
St. Paul MN 55110

COVERAGES **CERTIFICATE NUMBER:** 2023-2024 1 PL Renewed **REVISION NUMBER:**

THIS IS TO CERTIFY THAT THE POLICIES OF INSURANCE LISTED BELOW HAVE BEEN ISSUED TO THE INSURED NAMED ABOVE FOR THE POLICY PERIOD INDICATED. NOTWITHSTANDING ANY REQUIREMENT, TERM OR CONDITION OF ANY CONTRACT OR OTHER DOCUMENT WITH RESPECT TO WHICH THIS CERTIFICATE MAY BE ISSUED OR MAY PERTAIN, THE INSURANCE AFFORDED BY THE POLICIES DESCRIBED HEREIN IS SUBJECT TO ALL THE TERMS, EXCLUSIONS AND CONDITIONS OF SUCH POLICIES. LIMITS SHOWN MAY HAVE BEEN REDUCED BY PAID CLAIMS.

INSR LTR	TYPE OF INSURANCE	ADDL INSD	SUBR WVD	POLICY NUMBER	POLICY EFF (MM/DD/YYYY)	POLICY EXP (MM/DD/YYYY)	LIMITS	
	COMMERCIAL GENERAL LIABILITY						EACH OCCURRENCE	$
	CLAIMS-MADE / OCCUR						DAMAGE TO RENTED PREMISES (Ea occurrence)	$
							MED EXP (Any one person)	$
							PERSONAL & ADV INJURY	$
	GEN'L AGGREGATE LIMIT APPLIES PER:						GENERAL AGGREGATE	$
	POLICY / PRO-JECT / LOC						PRODUCTS - COMP/OP AGG	$
	OTHER:							$
	AUTOMOBILE LIABILITY						COMBINED SINGLE LIMIT (Ea accident)	$
	ANY AUTO						BODILY INJURY (Per person)	$
	OWNED AUTOS ONLY / SCHEDULED AUTOS						BODILY INJURY (Per accident)	$
	HIRED AUTOS ONLY / NON-OWNED AUTOS ONLY						PROPERTY DAMAGE (Per accident)	$
								$
	UMBRELLA LIAB / OCCUR						EACH OCCURRENCE	$
	EXCESS LIAB / CLAIMS-MADE						AGGREGATE	$
	DED / RETENTION $							$
	WORKERS COMPENSATION AND EMPLOYERS' LIABILITY						PER STATUTE / OTHER	
	ANY PROPRIETOR/PARTNER/EXECUTIVE OFFICER/MEMBER EXCLUDED? Y / N (Mandatory in NH)	N / A					E.L. EACH ACCIDENT	$
	If yes, describe under DESCRIPTION OF OPERATIONS below						E.L. DISEASE - EA EMPLOYEE	$
							E.L. DISEASE - POLICY LIMIT	$
A	Professional Liability			DPR5018962	10/01/2023	12/01/2024	Each Claim / Each Policy Year / Aggregate	$5,000,000 / $10,000,000

DESCRIPTION OF OPERATIONS / LOCATIONS / VEHICLES (ACORD 101, Additional Remarks Schedule, may be attached if more space is required)

Re: SEH No. 172371 / 23-046 Design of Future WW Pretreatment Bldg

This certificate or memorandum of insurance does not affirmatively or negatively amend, extend, or alter the coverage afforded by the insurance policy.

CERTIFICATE HOLDER
City of Pueblo, A Municipal Corporation
230 South Mechanic Street
Pueblo CO 81003

CANCELLATION
SHOULD ANY OF THE ABOVE DESCRIBED POLICIES BE CANCELLED BEFORE THE EXPIRATION DATE THEREOF, NOTICE WILL BE DELIVERED IN ACCORDANCE WITH THE POLICY PROVISIONS.

AUTHORIZED REPRESENTATIVE
Therese M. Anderson

© 1988-2015 ACORD CORPORATION. All rights reserved.

ACORD 25 (2016/03) The ACORD name and logo are registered marks of ACORD

Docusign Envelope ID: 1DDD049B-FCF9-4559-95A9-751907C4636E

City Clerk's Office Item # M7

Background Paper for Proposed Resolution

COUNCIL MEETING DATE: November 11, 2024

TO: President Mark Aliff and Members of City Council

CC: Mayor Heather Graham

VIA: Marisa Stoller, City Clerk

FROM: Andrew Hayes, Public Works Director

SUBJECT: A RESOLUTION AWARDING A CONSTRUCTION CONTRACT IN THE AMOUNT OF $26,830 TO CEDAR RIDGE LANDSCAPE, INC., FOR PROJECT NO. 24-130, BRADFORD PARK - BASKETBALL COURT CONCRETE AND FENCING IMPROVEMENTS (CDBG), SETTING FORTH $5,000 FOR CONTINGENCIES, AND AUTHORIZING THE PURCHASING AGENT TO EXECUTE SAME

SUMMARY:

Attached is a resolution awarding a construction contract to Cedar Ridge Landscape Inc., for Project No. 24-130, Bradford Park - Basketball Court Concrete and Fencing Improvements (CDBG).

PREVIOUS COUNCIL ACTION:

None.

BACKGROUND:

This project will consist of concrete ADA accessibility improvements and chain link fencing upgrades to Bradford Park basketball court.

This Resolution awards the construction contract to Cedar Ridge Landscape, Inc.

FINANCIAL IMPLICATIONS:

Funding (including contingencies), in the amount of $31,830.00, will be paid from Project Account CD2212, Bradford Basketball Court Rehab

BOARD/COMMISSION RECOMMENDATION

None.

Docusign Envelope ID: 1DDD049B-FCF9-4559-95A9-751907C4636E

STAKEHOLDER PROCESS:

None.

ALTERNATIVES:

Denial of this resolution will cancel the project.

RECOMMENDATION:

Approval of the Resolution.

ATTACHMENTS:

1. 24-130 Bid Summary

Docusign Envelope ID: 1DDD049B-FCF9-4559-95A9-751907C4636E

RESOLUTION NO. 15811

A RESOLUTION AWARDING A CONSTRUCTION CONTRACT IN THE AMOUNT OF $26,830 TO CEDAR RIDGE LANDSCAPE, INC., FOR PROJECT NO. 24-130, BRADFORD PARK - BASKETBALL COURT CONCRETE AND FENCING IMPROVEMENTS (CDBG), SETTING FORTH $5,000 FOR CONTINGENCIES, AND AUTHORIZING THE PURCHASING AGENT TO EXECUTE SAME

WHEREAS, competitive bids for Project No. 24-130, Bradford Park - Basketball Court Concrete and Fencing Improvements (CDBG) have been received and examined; AND,

WHEREAS, the proposal of Cedar Ridge Landscape, Inc., was the lowest bid determined to be responsive, and the Committee of Awards recommends to the City Council that it authorize Project No. 24-130, Bradford Park - Basketball Court Concrete and Fencing Improvements (CDBG) to be performed; NOW, THEREFORE,

BE IT RESOLVED BY THE CITY COUNCIL OF PUEBLO, that

SECTION 1.

The City Council authorizes Project No. 24-130, Bradford Park - Basketball Court Concrete and Fencing Improvements (CDBG) to be performed, and the contract for said project is hereby awarded to Cedar Ridge Landscape, Inc., in the amount of $26,830.00.

SECTION 2.

The Purchasing Agent is hereby authorized to execute said contract on behalf of the City of Pueblo, a Colorado Municipal Corporation, and the City Clerk shall affix the seal of the City thereto and attest same.

SECTION 3.

In addition to the amount of the bid set forth, as aforementioned, an additional amount as stipulated in this section is hereby established for contingencies and additional work.

Contingencies and Additional Work……$5,000.00

SECTION 4.

Funding, in the amount of $31,830.00 shall be from Project Account CD2212 Bradford Basketball Court Rehab.

SECTION 5.

The officers of the City of Pueblo are authorized to perform any and all acts consistent with this Resolution to implement the policies and procedures described herein.

SECTION 6.

This Resolution shall become effective immediately upon passage and approval.

INTRODUCED: November 11, 2024

BY: Regina Maestri
MEMBER OF CITY COUNCIL

APPROVED: DocuSigned by: Mark Alliff B7A4F51823AB482...
PRESIDENT OF CITY COUNCIL

ATTESTED BY: DocuSigned by: 7C02E8DFFC3D43C...
CITY CLERK

City of Pueblo
Purchasing
Naomi Hedden, Director
230 S. Mechanic St., Pueblo, CO 81003

EVALUATION TABULATION

IFB No. 24-130 (CD2212)

Bradford Park - Basketball Court Concrete and Fencing Improvements (CDBG)

RESPONSE DEADLINE: October 30, 2024 at 10:30 am
Report Generated: Wednesday, October 30, 2024

VENDOR TOTALS

Vendor	Total
Cedar Ridge Landscape, Inc	$26,830.00

BRADFORD PARK - BASKETBALL COURT CONCRETE AND FENCING IMPROVEMENTS (CDBG) BASE BID

Bradford Park - Basketball Court Concrete and Fencing Improvements (CDBG)					Cedar Ridge Landscape, Inc	
Selected	Line Item	Description	Quantity	Unit of Measure	Unit Cost	Total
X	1	Remove Asphalt	913	SF	$2.00	$1,826.00
X	2	Remove Concrete	400	SF	$2.00	$800.00
X	4	Construct 4" Concrete	561	SF	$9.00	$5,049.00
X	5	Construct 2" Asphalt Patch	752	SF	$6.50	$4,888.00
X	6	Install Curb Head	17	LF	$20.00	$340.00
X	7	Cut existing fence posts 10' to 6'	7	EA	$55.00	$385.00
X	8	Install 6' Tall Chain Link Fencing without Posts	203	LF	$35.00	$7,105.00
X	9	Install 6" Tall Chain Link Fencing with Posts	29	LF	$58.00	$1,682.00
X	10	Install Gate 8'X6'' Double Drive Gate w/ Pioneer Latch	1	EA	$2,400.00	$2,400.00
X	11	Install Tactile Bands 24"X24"	2	EA	$250.00	$500.00
X	12	Install Class 6 Road base	1	TONS	$55.00	$55.00
X	13	Erosion and Sediment Control	1	LS	$200.00	$200.00
X	14	Traffic Control	1	LS	$600.00	$600.00
X	15	Mobilization	1	LS	$1,000.00	$1,000.00
Total						$26,830.00

VENDOR QUESTIONNAIRE PASS/FAIL

Question Title	Cedar Ridge Landscape, Inc
BID GUARANTEE	Pass
CONFIRMATION OF UNDERSTANDING AND OFFER	Pass
NAME, TITLE, AND CONTACT INFORMATION	Pass
SAM.gov REGISTRATION	Pass
ACKNOWLEDGEMENTS	
AFFIRMATIVE ACTION PLAN REQUIREMENT:	Pass
PERFORMANCE OF WORK REQUIREMENT:	Pass
INSURANCE REQUIREMENTS	Pass
COLORADO LABOR REQUIREMENT:	Pass
ACKNOWLEDGEMENT OF PREVAILING WAGES & ADDITIONAL WAGE CLASSIFICATION RESPONSIBILITY	Pass
CERTIFICATION OF NONSEGREGATED FACILITIES	Pass
SALES AND/OR USE TAX INFORMATION	Pass
Has/is this firm or any officer or partner of this firm:	
Convicted of a criminal offense	Pass
Convicted under state or federal statutes	Pass
Convicted under state or federal antitrust statutes	Pass
Failed to perform	Pass
Suspension or Debarment	Pass
Unqualified	Pass
Unlicensed	Pass
Delinquent	Pass

Question Title	Cedar Ridge Landscape, Inc
Confirmation	Pass
Section 3 Forms	
Section 3 Form S3a Section 3 Compliance	Pass
Section 3 Form S3e Business Certification	Pass

Docusign Envelope ID: 1DDD049B-FCF9-4559-95A9-751907C4636E

City Clerk's Office Item # M8

Background Paper for Proposed Resolution

COUNCIL MEETING DATE: November 11, 2024

TO: President Mark Aliff and Members of City Council

CC: Mayor Heather Graham

VIA: Marisa Stoller, City Clerk

FROM: Andrew Hayes, Public Works Director

SUBJECT: A RESOLUTION AUTHORIZING THE ISSUANCE OF A REVOCABLE PERMIT (REV-24-38) TO THE YMCA OF PUEBLO FOR THE USE OF ONE LANE OF SPAULDING AVENUE AND ONE LANE OF PARKER BLVD. FOR THEIR 2024 YMCA TURKEY TROT ON THANKSGIVING DAY

SUMMARY:

Attached is a draft Revocable Permit (REV-24-38) submitted by the YMCA of Pueblo.

PREVIOUS COUNCIL ACTION:

None.

BACKGROUND:

The YMCA of Pueblo has submitted a Revocable Permit application (REV-24-38) for the use of one lane of Spaulding Avenue and one lane of Parker Blvd on November 28, 2024, from 7:00 a.m. to 11:00 a.m. for their 2024 YMCA Turkey Trot event.

FINANCIAL IMPLICATIONS:

None.

BOARD/COMMISSION RECOMMENDATION:

The Revocable Permit Review Committee recommends approval.

STAKEHOLDER PROCESS:

None.

Docusign Envelope ID: 1DDD049B-FCF9-4559-95A9-751907C4636E

ALTERNATIVES:

Failure to approve the Resolution will prevent the applicant from utilizing the right-of-way to host its event.

RECOMMENDATION:

Approval of the Resolution.

ATTACHMENTS:

1. REV-24-38

Docusign Envelope ID: 1DDD049B-FCF9-4559-95A9-751907C4636E

RESOLUTION NO. 15812

A RESOLUTION AUTHORIZING THE ISSUANCE OF A REVOCABLE PERMIT (REV-24-38) TO THE YMCA OF PUEBLO FOR THE USE OF ONE LANE OF SPAULDING AVENUE AND ONE LANE OF PARKER BLVD. FOR THEIR 2024 YMCA TURKEY TROT ON THANKSGIVING DAY

BE IT RESOLVED BY THE CITY COUNCIL OF PUEBLO, that

SECTION 1.

The attached Revocable Permit (REV-24-38) is authorized to be issued to the YMCA of Pueblo for the use of one lane of Spaulding Avenue and one lane of Parker Blvd on November 28, 2024, from 7:00 a.m. to 11:00 a.m. for their 2024 YMCA Turkey Trot event.

SECTION 2.

The use of the public right-of-way granted hereby is subject to all limitations, terms, and conditions set forth in the attached Revocable Permit (REV-24-38).

SECTION 3.

The officers of the City are authorized to perform any and all acts consistent with the intent of this Resolution to implement the policies and procedures described herein.

SECTION 4.

This Resolution shall become effective immediately upon passage and approval.

INTRODUCED: November 11, 2024

BY: Regina Maestri
MEMBER OF CITY COUNCIL

DocuSigned by:
APPROVED: Mark Aliff
B7A4F51823AB402...
PRESIDENT OF CITY COUNCIL

DocuSigned by:
ATTESTED BY: 7C02EBDFFC3D43C...
CITY CLERK

REVOCABLE PERMIT

Pursuant to the authority granted by Section 16-9 of the Charter of Pueblo, a Municipal Corporation, (the "City"), the City Council of City hereby grants the following revocable permit to Permittee subject to and conditioned upon the provisions herein contained and the Permittee's compliance therewith:

1. Name, Address and Telephone Number of Permittee: **YMCA of Pueblo 3200 E Spaulding Aveq 7195435151**
2. Permitted Area: One lane of Spaulding Ave and one lane of Parker Blvd
3. Purpose of Revocable Permit: **Closure of the permitted area to vehicular traffic to facilitate the 2024 YMCA Turkey Trot on Thanksgiving Day.**
4. Commencement Date: **November 28, 2024** Time: **7:00am**
5. Ending Date: **November 28, 2024** Time: **11:00am**

PERMITTEE IN CONSIDERATION OF THE ISSUANCE AND GRANTING OF THE ABOVE DESCRIBED REVOCABLE PERMIT (THE "PERMIT") REPRESENTS, WARRANTS AND AGREES:

(a) The Permitted Area shall be used for the above-specified Purpose of Revocable Permit. No use of the Permitted Area shall be made before the time of the Commencement Date.

(b) All structures, fences, tables, chairs, equipment or other improvements authorized to be placed in the Permitted Area by Permittee (the "Improvements") shall be constructed, installed, and maintained by Permittee in compliance with all applicable codes, ordinances, rules and regulations of City and this Permit.

(c) If the Revocable Permit is issued for a sidewalk café, the Permittee and sidewalk café shall be subject to all the provisions, conditions and requirements contained in section 9-10-84 of the Pueblo Municipal Code, or as same may be amended, which are incorporated herein by reference. In addition, no Improvement shall be tied-down or chained to any tree within or adjacent to the Permitted Area nor shall any Improvement be installed or located in such a manner as to hinder or interfere with the opening of motor vehicle doors or passenger movement to and from motor vehicles parked adjacent to or near the Permitted Area.

(d) If this Permit is issued for the use of the public right-of-way for a special event, Permittee shall deposit with the City the sum of $500.00 ("Deposit"). The Deposit will be forfeited to the City if Permittee does not remove all Permittee's equipment and property from, and clean and restore the Permitted Area to its original condition before the Time of the Ending Date. If so timely removed and cleaned, the Deposit will be returned to Permittee.

(e) Before the Time of the Ending Date, or immediately upon any other termination of this Permit, Permittee shall, at Permittee's expense, remove all of Permittee's Improvements from the Permitted Area and clean and restore the Permitted Area to its original condition. Failure to timely remove all of Permittee's Improvements from the Permitted Area and clean and restore the Permitted Area to its original condition shall constitute Permittee's abandonment of the Permittee's Improvements, and City may, at Permittee's expense, remove and dispose of Permittee's Improvements and clean and restore the Permitted Area to its original condition. Permittee agrees to pay all City's costs and expenses, including reasonable attorney fees, incurred in the enforcement of this Permit.

(f) Permittee shall keep all Improvements and Permitted Area in good, clean and safe condition and repair, free from litter, waste and debris.

(g) Permittee shall indemnify, defend and hold City, its officers, agents and employees harmless from and against any and all suits, claims, liabilities, loss, damages and expenses, including reasonable attorney fees and cost of defense, arising, directly or indirectly, from or caused by the issuance of this Permit or the conditions hereof, or the existence, construction, installation, repair or maintenance of the Improvements in the Permitted Area, or the use of the Permitted Area or Improvements by Permittee, its officers, agents, employees, invitees or general public.

(h) Neither this Permit nor any of the privileges granted to Permittee hereby, may be conveyed, assigned, transferred or sublet by Permittee without the prior written consent of the City Council of City. Any attempted conveyance, assignment, transfer or subletting of the Permit or Permitted Area without the written consent of the City Council of Pueblo shall be void and of no effect and shall cause this Permit to be automatically revoked.

(i) Permittee shall keep and maintain commercial general liability insurance covering the Permitted Area and Improvements in amounts not less than $1,000,000.00 combined single limits per occurrence and aggregate, naming the City as an additional insured and contain a waiver of rights of subrogation against City. A certificate for such insurance and each renewal thereof shall be delivered to the City. Failure to maintain such insurance shall cause this Permit to be automatically revoked.

(j) Trees, landscaping and shrubbery within or adjacent to the Permitted Area shall be protected from damage or injury by Permittee and shall not be removed except after receipt by the Permittee of the written consent of the City's Director of Parks and Recreation. Covid-19

(k) Any notice or other document required or permitted herein shall be in writing and delivered personally or by first class mail, postage prepaid, as follows:

(i) If to Permittee, at the address shown in paragraph 1 above.

(ii) If to City, 1 City Hall Place, Pueblo, Colorado, 81003, Attention: Revocable Permit Review Committee. Each party reserves the right to change its address provided notice of such change is given in accordance with this paragraph (k).

(l) City reserves and is hereby granted by Permittee access to, under and through the Permitted Area for any and all purposes. City may injure, damage or remove any and all Permittee's Improvements in the Permitted Area in exercising the right of access hereby reserved and granted. Permittee assumes the risk of injury, loss and damage to Permittee's Improvements within the Permitted area, and City shall have no responsibility or liability for any damage or injuries thereto, whatsoever the cause, including, but not limited to, the acts or omissions of City, its officers, employees, or agents.

(m) This Permit shall terminate upon the occurrence of any one of the following events: (i) the Time of the Ending Date, (ii) abandonment or nonuse by Permittee for a period of three (3) consecutive months, (iii) surrender or cancellation of the Permit in writing by Permittee, (iv) automatic revocation as provided in paragraphs (h) and (i) above; (v) revocation or termination of this Permit by resolution of the City Council of City; or (vi) revocation by the Mayor as provided in paragraph (p). The termination of this Permit shall not relieve Permittee from Permittee's obligations under paragraph (f) until the Authorized Improvements have been removed by Permittee in compliance with paragraph (e).

(n) Permittee acknowledges and agrees that this Permit is temporary and subject to revocation or termination by resolution of the City Council of City, in its sole discretion, for any reason or no reason, at anytime, without liability to City, and without notice to or hearing by Permittee. Permittee waives any and all right or claim to such notice, hearing, and liability of the City.

(o) Permittee acknowledges and agree that use of the Permitted Area shall be conducted in compliance with applicable laws and regulations including but not limited orders, regulations and directives issued by the Governor, Colorado Department of Public Health and Environment and the Pueblo County Department of Public Health and Environment with respect to COVID-19 ("COVID-19 Regulations"). Seven days prior to Commencement Date, Permittee shall submit in writing to the Revocable Permit Review Committee those actions Permittee shall take to assure protection of the public health and compliance with COVID-19 Regulations.

(p) Permittee further acknowledges and agrees that this Permit is temporary and subject to revocation or termination if the purpose of the permit or any potential activities to be conducted under the Permit is determined by the Mayor of City, in his sole and absolute discretion, to not be in furtherance of and/or contrary to the public health or welfare due to COVID-19 or related issues. Such determination and termination may be issued at any time, without liability to City, and without notice to or hearing by Permittee. Permittee waives any and all right or claim to such notice, hearing, and liability of the City.

(q) Nothing in this Permit shall be interpreted to limit or prevent the protections afforded to City under the Colorado Governmental Immunity Act, C.R.S. § 24-10-101, et seq.

Signed in Pueblo, Colorado this 8th day of November, 2024.

PERMITTEE:

Organization or Individual: YMCA of Pueblo

By: Dirk Hodge

Title: Community Program Director

STATE OF COLORADO)

COUNTY OF PUEBLO) SS..

The foregoing instrument was acknowledged before me the 8th day of November, 2024 by Dirk Hodge as Community Program Director.

My commission expires: _____.

TACY SUZETTE BARRY
NOTARY PUBLIC
STATE OF COLORADO
NOTARY ID 20234007982
MY COMMISSION EXPIRES 02/28/2027

Tacy Suzette Barry

Notary Public

~~APPROVED~~ this _____ day of _____, 20____.

PUEBLO, a Municipal Corporation

Signed by:

By _____ 3A85950B7BCA462...

Heather Graham, Mayor

Docusign Envelope ID: 1DDD049B-FCF9-4559-95A9-751907C4636E

Background Paper for Proposed Resolution

COUNCIL MEETING DATE: November 11, 2024

TO: President Mark Aliff and Members of City Council

CC: Mayor Heather Graham

VIA: Marisa Stoller, City Clerk

FROM: Andra Ahrens, Director Wastewater

SUBJECT: A RESOLUTION TRANSFERRING $10,489 FROM WW9999 TO WW2404, FOR PROJECT NO. 24-103 (WW2404) PUEBLO RAPTOR CENTER ONSITE WATER TREATMENT SYSTEM REPAIR PROJECT.

SUMMARY:

Attached is a Resolution transferring $10,489 from WW9999 to WW2404 for Project No. 24-103 (WW2404) Pueblo Raptor Center Onsite Water Treatment System (OWTS) Repair Project. This project repaired the defective OWTS located at the Pueblo Nature Center Raptor Center.

PREVIOUS COUNCIL ACTION:

Ordinance 12068 amended the agreement with the Nature and Raptor Center of Pueblo, Inc. to include subsections that require the City to manage and maintain the onsite wastewater treatment system at the Nature and Raptor Center of Pueblo, Inc.

BACKGROUND:

On April 8, 2024, the Wastewater Department was notified of the defective OWTS at the Raptor Center. The OWTS had several cracks that allowed root intrusion and limited the capacity of the tank. The system was required to be pumped monthly for the Raptor Center to have service.

FINANCIAL IMPLICATIONS:

The funds in the amount of $10,489 are being transferred from Project WW9999 to WW2404.

Funds are available and will be paid from the Sewer User Funds which have been budgeted and appropriated to Project No. 24-103 (WW2404).

Docusign Envelope ID: 1DDD049B-FCF9-4559-95A9-751907C4636E

BOARD/COMMISSION RECOMMENDATION:

Not Applicable

STAKEHOLDER PROCESS:

None

ALTERNATIVES:

None

RECOMMENDATION:

Approval of the Resolution

ATTACHMENTS:

1. 11-11-24 Pueblo Raptor Center OWTS Transfer Attachments

Docusign Envelope ID: 1DDD049B-FCF9-4559-95A9-751907C4636E

RESOLUTION NO. 15813

A RESOLUTION TRANSFERRING $10,489 FROM WW9999 TO WW2404, FOR PROJECT NO. 24-103 (WW2404) PUEBLO RAPTOR CENTER ONSITE WATER TREATMENT SYSTEM REPAIR PROJECT.

WHEREAS, The City of Pueblo, each year, has budgeted and appropriated funds for many projects in Wastewater; and

WHEREAS, Projects to Be Determined project (WW9999) was created to transfer unused and/or remaining budgets to projects as may be needed, and the current available balance is $81,891.89; NOW, THEREFORE,

BE IT RESOLVED BY THE CITY COUNCIL OF PUEBLO, that

SECTION 1.

Project WW2404, Pueblo Raptor Center Onsite Water Treatment System Repair Project, is hereby established.

SECTION 2.

Funds in the amount of $10,489 are hereby transferred from account Project WW9999 into account Project WW2404, Pueblo Raptor Center OWTS Repair, and budgeted and appropriated for project WW2404.

SECTION 3.

The officers and staff of the City are authorized and directed to perform any and all acts consistent with the intent of this Resolution to effectuate the policies and procedures described herein.

SECTION 4.

This Resolution shall become effective immediately upon passage and approval.

INTRODUCED: November 11, 2024

BY: Regina Maestri
MEMBER OF CITY COUNCIL

DocuSigned by:
APPROVED: Mark Aliff
B7A4F51823AB462...
PRESIDENT OF CITY COUNCIL

DocuSigned by:
ATTESTED BY: 7C02EB0FFC3D43C...
CITY CLERK

City of Pueblo
Purchasing
Naomi Hedden, Director
230 S. Mechanic St., Pueblo, CO 81003

EVALUATION TABULATION

IIFB-S No. 24-103

Pueblo Raptor Center OWTS Repair

RESPONSE DEADLINE: August 6, 2024 at 10:00 am
Report Generated: Tuesday, August 6, 2024

VENDOR TOTALS

Vendor	Total
ON THE MOVE SEPTIC PUMPING SERVICE LLC	$9,489.00

TABLE 1

					ON THE MOVE SEPTIC PUMPING SERVICE LLC	
Selected	Line Item	Description	Quantity	Unit of Measure	Unit Cost	Total
X	1	OWTS Repair	1	LS	$9,489.00	$9,489.00
Total						$9,489.00

VENDOR QUESTIONNAIRE PASS/FAIL

Question Title	ON THE MOVE SEPTIC PUMPING SERVICE LLC
Confirmation of Offer and Understanding	Pass
Name, Title, and Contact Information	Pass
Insurance Requirements	Pass
Specification Exceptions	
Specification Exceptions	Pass
List Exceptions to Specifications (if any)	Pass
Has/is this firm or any officer or partner of this firm:	
Convicted of a criminal offense	Pass
Convicted under state or federal statutes	Pass
Convicted under state or federal antitrust statutes	Pass
Failed to perform	Pass
Suspension or Debarment	Pass
Unqualified	Pass
Unlicensed	Pass
Delinquent	Pass
Confirmation	Pass

On The Move Septic Pumping, LLC.

50 N. Fabrication Drive
Pueblo West, CO 81007

Invoice

Date	Invoice #
8/31/2024	16090-3068

Bill To	Ship To
City of Pueblo Finance Raptor Center	

P.O. Number	Terms	Rep	Ship	Via	F.O.B.	Project
24-103			8/31/2024			

Quantity	Item Code	Description	Price Each	Amount
1	septic installation	Septic installation - new tank and leach field	9,489.00	9,489.00
1	Site Work	Boulders and placement of boulders to guard leach field	1,000.00	1,000.00

Total $10,489.00

city of PUEBLO colorado

WASTEWATER DEPARTMENT
ENGINEERING DIVISION
1300 S QUEENS AVE
PUEBLO, CO 81001

SCALE (H): 1' =2,000
SCALE (V): N/A

DRAWN BY: S.M.
DESIGNED BY: S.M.
CHECKED BY: S.M.

DATE: 10/28/2024

PROJECT #24-103
PUEBLO RAPTOR CENTER OWTS REPAIR

LOCATION MAP

Docusign Envelope ID: 1DDD049B-FCF9-4559-95A9-751907C4636E

City Clerk's Office Item # M10

Background Paper for Proposed Resolution

COUNCIL MEETING DATE: November 11, 2024

TO: President Mark Aliff and Members of City Council

CC: Mayor Heather Graham

VIA: Marisa Stoller, City Clerk

FROM: Steven Meier, Director of Parks and Recreation

SUBJECT: A RESOLUTION APPROVING AN EASEMENT AGREEMENT FOR A PORTION OF TRACT C OF LAKE MINNEQUA RESERVATION BETWEEN THE CITY OF PUEBLO, A COLORADO MUNICIPAL CORPORATION, AND BLACK HILLS ENERGY FOR THE INSTALLATION OF ABOVE GROUND CABINETS AND UNDERGROUND SERVICE LINES ALONG LAKEVIEW AVENUE

SUMMARY:

This Resolution approves an easement to Black Hills Energy through a portion of Tract C of Lake Minnequa Reservation along Lakeview Avenue for the purpose of allowing for the installation of above ground cabinets and underground service lines.

PREVIOUS COUNCIL ACTION:

Not applicable to this Resolution.

BACKGROUND:

In September 2024, Black Hills Energy approached City through the Department of Parks and Recreation requesting an easement along Lakeview Avenue, a portion of Tract C of Lake Minnequa Reservation. In exchange, Black Hills Energy is compensating the City the sum of ten dollars ($10.00). Black Hills Energy will be installing new underground service line and above ground cabinets to serve the community. An easement agreement has been drafted.

FINANCIAL IMPLICATIONS:

Once the Easement Agreement is approved, Black Hills Energy will pay the City ten dollars ($10.00) in compensation. No cost to City.

Docusign Envelope ID: 1DDD049B-FCF9-4559-95A9-751907C4636E

BOARD/COMMISSION RECOMMENDATION:

Not applicable to this Resolution.

STAKEHOLDER PROCESS:

Not applicable to this Resolution.

ALTERNATIVES:

Black Hills Energy will not be able to complete the utility line installation if the Easement Agreement is not approved.

RECOMMENDATION:

Approval of the Resolution.

ATTACHMENTS:

1. Portion of Tract C Lake Minnequa Reservation - Lakeview Ave Easement - City of Pueblo 100724

Docusign Envelope ID: 1DDD049B-FCF9-4559-95A9-751907C4636E

RESOLUTION NO. 15814

A RESOLUTION APPROVING AN EASEMENT AGREEMENT FOR A PORTION OF TRACT C OF LAKE MINNEQUA RESERVATION BETWEEN THE CITY OF PUEBLO, A COLORADO MUNICIPAL CORPORATION, AND BLACK HILLS ENERGY FOR THE INSTALLATION OF ABOVE GROUND CABINETS AND UNDERGROUND SERVICE LINES ALONG LAKEVIEW AVENUE

BE IT RESOLVED BY THE CITY COUNCIL OF PUEBLO, that

SECTION 1.

The Easement Agreement dated November 11, 2024, from the City of Pueblo to Black Hills Energy, a copy of which is attached hereto, having been approved by the Assistant City Attorney, is hereby accepted and approved. The Mayor is hereby authorized and directed to execute same for and on behalf of the City and the City Clerk is directed to affix the seal of the City thereto and attest same.

SECTION 2.

Black Hills Energy will pay the City ten dollars ($10.00) in compensation for the Easement Agreement. City staff are hereby directed to transfer the anticipated funds into.

SECTION 3.

The officers and staff of the City are authorized to perform any and all acts consistent with the intent of this Resolution which are necessary or desirable to implement the transactions described herein.

SECTION 4.

This Resolution shall become effective immediately upon final passage.

INTRODUCED: November 11, 2024

BY: Regina Maestri
MEMBER OF CITY COUNCIL

APPROVED: DocuSigned by: Mark Alliff B7A4F51823AB462...
PRESIDENT OF CITY COUNCIL

ATTESTED BY: DocuSigned by: 7C02EBDFEC3D43C...
CITY CLERK

EASEMENT T 21S

Pueblo County, Colorado R 65W

Section 11

EASEMENT FOR ELECTRIC & COMMUNICATIONS LINES

THIS EASEMENT, made and entered into this _____ day of _____, 2024, by and between City of Pueblo, a Colorado Municipal Corporation, whose address is 1 City Hall Place, Pueblo, Colorado 81003 "GRANTOR" and Black Hills Colorado Electric, LLC, d/b/a Black Hills Energy, having offices at 105 South Victoria Avenue, Pueblo, Colorado 81003, and its and their affiliates, lessees, licensees, designees, successors and assigns, of Pueblo County, Colorado, "GRANTEE".

KNOW ALL MEN BY THESE PRESENTS: That the undersigned, Grantor, in consideration of the sum of Ten and 00/100 ($10.00) dollars and other valuable consideration, the receipt of which is hereby acknowledged, hereby GRANTS, BARGAINS, SELLS AND CONVEYS to Grantee, its lessees, licensees, successors and assigns, the right, privilege and perpetual easement to enter upon the lands of Grantor as described below, to survey, construct, operate, patrol, inspect, maintain, alter, add wires, poles, cables, conduits, and pipes, repair, rebuild and remove, upgrade, update, uprate and enhance on, under and over the easement described below, and in and upon all streets, roadways or highways abutting said lands, now or at any future time, lines for the transmission and distribution of electric energy, audio communications, visual communications, and data communications, and all appurtenances and appliances necessary in connection therewith including the right to install and maintain anchors and guy wires outside the right of way when reasonably necessary, together with the right of ingress and egress to and from said lines of Grantee over the lands of Grantor so that Grantee may go to and from said lines from the public roads adjacent to Grantor's lands, which said lands of Grantor, situate in the County of Pueblo in the State of Colorado, are described as follows:

A portion of Tract C of Lake Minnequa Reservation, Second Filing recorded at Reception No. 120464 of the Pueblo County Records in Pueblo, Colorado. In Section 11, Township 21 South, Range 65 West of the 6th PM, Pueblo County, Colorado.

A ten-foot (10') easement across Grantor's lands, as more fully described on the attached Exhibit A, which by this reference is fully incorporated herein. The total area contains 4690 square feet, plus or minus.

Grantee may erect and use gates in all fences which cross or which shall hereinafter cross the route of said lines. Grantee is given the right to trim, cut and clear away any trees, limbs and brush on or immediately adjacent to the above-described easement whenever, in its judgment, such will interfere with or endanger the construction, operation or maintenance of said lines. In exercising its rights of ingress or egress Grantee shall, whenever practicable, use existing roads or lanes and shall repair any damage caused by its use thereof.

It being the intention of the parties hereto that Grantor is hereby granting the uses herein specified without divesting Grantor and heirs or assigns of the right to cultivate, use and enjoy the above-described premises: PROVIDED, however, such use shall not, in the judgment of said Grantee, interfere with or endanger the construction, operation or maintenance of said lines, and provided further that no building shall be constructed on the easement without written permission from Grantee.

Grantee, its successors and assigns, agrees to pay for damage caused to land, growing crops, fences, livestock or other personal property of Grantor, from the construction, operations or maintenance of said lines.

Title to said lines shall be and remain in said Grantee.

TO HAVE AND TO HOLD said easement and rights aforesaid with all and singular, the rights, privileges, appurtenances, and immunities thereto belonging or in anyway appertaining unto Grantee its lessees, licensees, successors or assigns forever. This easement conveyance shall run with the land and shall be binding upon Grantor and Grantor's heirs, administrators, executors, successors and assigns. Grantor hereby covenants that Grantor is the owner(s) of the above-described land, subject to existing liens and right-of-way easements of record.

IN TESTIMONY WHEREOF, City of Pueblo, a Colorado Municipal Corporation, has hereunto executed this Easement on the day first above written.

GRANTOR:

_____
By: Mayor, City of Pueblo a Colorado Municipal Corporation

ATTEST:

_____

By: _____, City Clerk, City of Pueblo a Colorado Municipal Corporation

Grantor's address and telephone number: 1 City Hall Place, Pueblo, Colorado 81003 (719) 553-2655

Grantee Black Hills Energy contact: Pat Zamora, Estimator II, Black Hills Energy, 105 S. Victoria Ave., Pueblo, Colorado 81212, 719 248 9452

ACKNOWLEDGEMENT

STATE OF COLORADO }
} ss.
COUNTY OF PUEBLO }

On this _____ day of _____, 2024, before me, a Notary Public, personally appeared _____, the Mayor, City of Pueblo a Colorado Municipal Corporation, to me personally known and who by me duly sworn did acknowledge that he executed the foregoing instrument on behalf of the City of Pueblo.

IN TESTIMONY WHEREOF, I have hereunto set my hand and affixed my official seal at the day and year last above written.

_____
Print Name

_____
Notary Public in and for said State

My commission expires: _____

After signing, please return to Amanda Cochran, agent for Black Hills, at C2 Consulting, 6879 Northstar Court, Castle Rock, CO 80108, 720 323-3754. Thank you.

PN: 1514100001	EXHIBIT A	Electrical Easement

Sheet 1 of 2

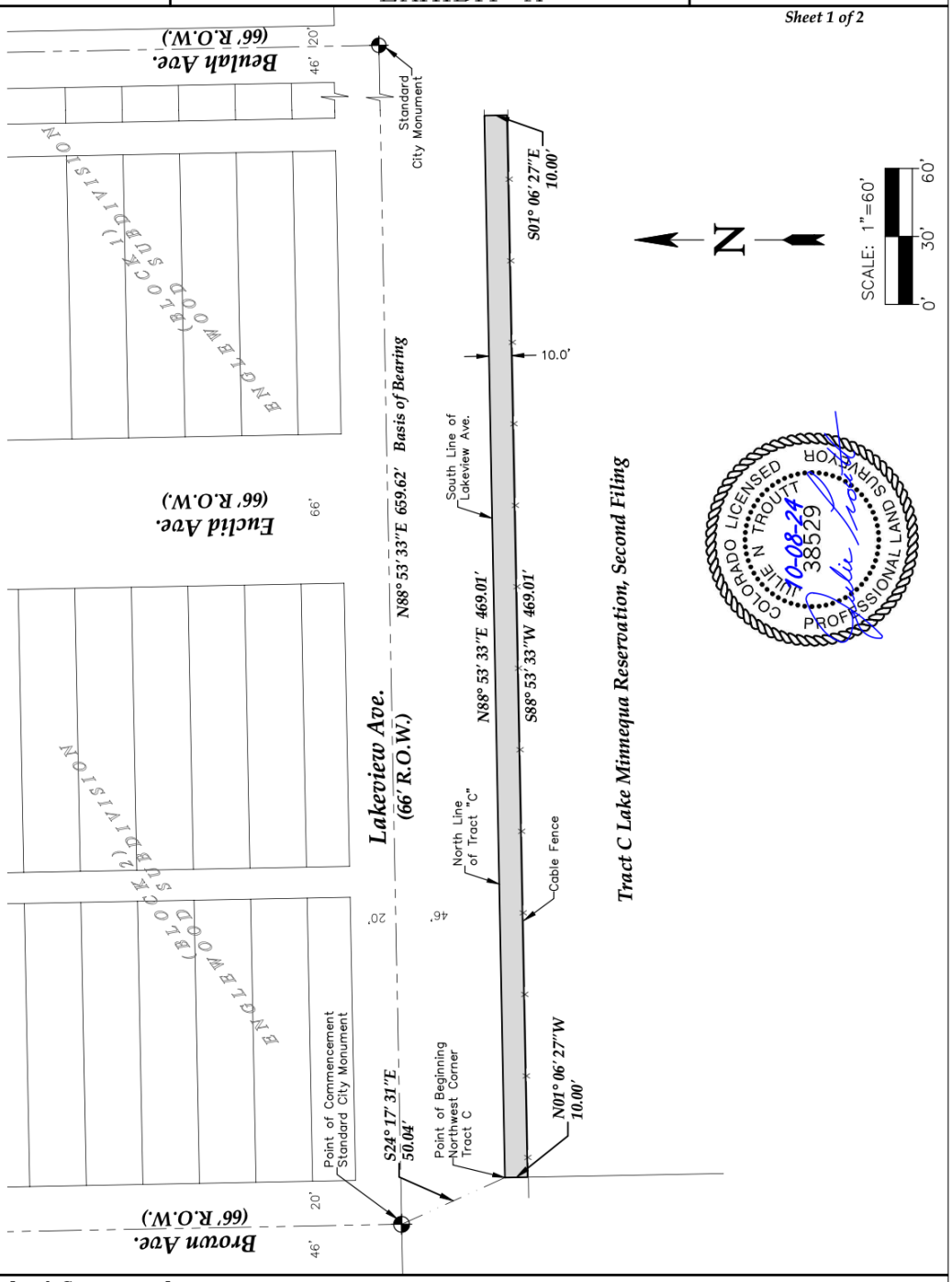

Colorado Land Surveyors, Inc.
184 S. Tiffany Drive, Ste. 106
Pueblo West, CO 81007
Phone: (719) 542-9169

PROJECT: BHE24-16
DATE: 10/8/2024
CLIENT: Black Hills Energy
DWN: KDU CHECKED: JNT

PN: 1514100001	EXHIBIT A	Electrical Easement

Sheet 2 of 2

A Ten (10) Foot electrical easement located in a portion of Tract C Lake Minnequa Reservation, Second Filing recorded at Reception No. 120464 of the Pueblo County records in Pueblo, Colorado to wit:

Commencing from the Standard City Monument located at the intersection of Brown Ave. and Lakeview Ave., S24°17'31"E, a distance of 50.04 feet to the Northwest corner of said Tract C being the Point of Beginning; Thence N88°53'33"E along said North line, a distance of 469.01 feet; Thence S01°06'27"E, a distance of 10.00 feet; Thence S88°53'33"W along a line being 10.00 feet southerly of and parallel with aforesaid North line, a distance of 469.01 feet; Thence N01°06'27"W, a distance of 10.00 feet to the Point of Beginning.

Said described electrical easement contains 0.11 Acres / 4690 Square Feet more or less (±), and is subject to any existing easements or rights-of-way.

The reference line on Lakeview Ave. between the intersections of Brown Ave. and Beulah Ave. bears N88°53'33"E, being monumented by a standard City Monument in Monument Box at each intersection

COLORADO LICENSED
JULIE N TROUT
10-08-24
38529
PROFESSIONAL LAND SURVEYOR

Julie N. Troutt -on Behalf of Colorado Land Surveyor's, Inc.
Colorado Licensed Professional Land Surveyor #38529

Colorado Land Surveyors, Inc. 184 S. Tiffany Drive, Ste. 106 Pueblo West, CO 81007 Phone: (719) 542-9169	PROJECT: BHE23-01 DATE: 1/30/2023 CLIENT: Black Hills Energy DWN: KDU CHECKED: JNT

Docusign Envelope ID: 1DDD049B-FCF9-4559-95A9-751907C4636E

City Clerk's Office Item # M11

Background Paper for Proposed Resolution

COUNCIL MEETING DATE: November 11, 2024

TO: President Mark Aliff and Members of City Council

CC: Mayor Heather Graham

VIA: Marisa Stoller, City Clerk

FROM: Andrew Hayes, Public Works Director

SUBJECT: A RESOLUTION AUTHORIZING THE ISSUANCE OF A REVOCABLE PERMIT (REV-24-34) TO BIF IV INTREPID OPCO., LLC., FOR THE PURPOSE OF ALLOWING AN AUTHORIZED STRUCTURE TO BE WITHIN THE PERMITTED AREA UNTIL TERMINATION OR REVOCATION OF THIS REVOCABLE PERMIT FOR USE OF THE EXISTING W. 18TH STREET BRIDGE BETWEEN ATLANTA AVE. AND HOOPER AVE., PUEBLO, CO

SUMMARY:

Attached is a draft revocable permit (REV 24-34) submitted by BIF IV Intrepid Opco., LLC.

PREVIOUS COUNCIL ACTION:

None.

BACKGROUND:

BIF IV Intrepid Opco., LLC, has submitted a revocable permit (REV-24-34) application for the purpose of allowing an authorized structure to be within the permitted area until termination or revocation of this revocable permit for use of the existing W. 18th Street bridge between Atlanta Ave. and Hooper Ave., Pueblo, CO

FINANCIAL IMPLICATIONS:

None.

BOARD/COMMISSION RECOMMENDATION:

The Revocable Permit Review Committee recommends approval.

Docusign Envelope ID: 1DDD049B-FCF9-4559-95A9-751907C4636E

STAKEHOLDER PROCESS:

None.

ALTERNATIVES:

Failure to approve the Resolution will prevent the applicant from facilitating the authorized structure.

RECOMMENDATION:

Approval of the Resolution.

ATTACHMENTS:

1. REV 24-34

Docusign Envelope ID: 1DDD049B-FCF9-4559-95A9-751907C4636E

RESOLUTION NO. 15815

A RESOLUTION AUTHORIZING THE ISSUANCE OF A REVOCABLE PERMIT (REV-24-34) TO BIF IV INTREPID OPCO., LLC., FOR THE PURPOSE OF ALLOWING AN AUTHORIZED STRUCTURE TO BE WITHIN THE PERMITTED AREA UNTIL TERMINATION OR REVOCATION OF THIS REVOCABLE PERMIT FOR USE OF THE EXISTING W. 18TH STREET BRIDGE BETWEEN ATLANTA AVE. AND HOOPER AVE., PUEBLO, CO

BE IT RESOLVED BY THE CITY COUNCIL OF PUEBLO, that

SECTION 1.

The attached Revocable Permit (REV-24-34) is authorized to be issued to BIF IV Intrepid Opco., LLC., for the purpose of allowing an authorized structure to be within the permitted area until termination or revocation of this revocable permit for use of the existing W. 18th Street bridge between Atlanta Ave. and Hooper Ave., Pueblo, CO.

SECTION 2.

The use of the public right-of-way granted hereby is subject to all limitations, terms, and conditions set forth in the attached Revocable Permit.

SECTION 3.

The officers of the City are authorized to perform any and all acts consistent with the intent of this Resolution to implement the policies and procedures described herein.

SECTION 4.

This Resolution shall become effective immediately upon passage and approval.

INTRODUCED: November 11, 2024

BY: Regina Maestri
MEMBER OF CITY COUNCIL

APPROVED: DocuSigned by: Mark Aliff
B7A4F51823AB462...
PRESIDENT OF CITY COUNCIL

ATTESTED BY: DocuSigned by:
7C02EBDFFC3D43C...
CITY CLERK

REVOCABLE PERMIT

(Existing Structure)

Pursuant to the authority granted by Section 16-9 of the Charter of Pueblo, a Municipal Corporation, (the "City"), the City Council of City hereby grants the following revocable permit to Permittee subject to and conditioned upon the provisions herein contained and the Permittee's compliance therewith:

1. Name, Address and Telephone Number of Permittee: **BIF IV Intrepid Opco, LLC 11001 W. 120th Avenue, Broomfield, CO 80021 (844) 380-8090**
2. Permitted Area: **W. 18th Street Bridge between Atlanta Ave and Hooper Ave, Pueblo, CO**
3. Purpose of Revocable Permit: **Allow the Authorized Structure to be within the Permitted Area until termination or revocation of this Revocable Permit.**
4. Authorized Structure: **Handholds, conduit and associated infrastructure**
5. Commencement Date: **November 15, 2024**
6. Ending Date: **Indefinite**

PERMITTEE IN CONSIDERATION OF THE ISSUANCE AND GRANTING OF THE ABOVE DESCRIBED REVOCABLE PERMIT (THE "PERMIT") REPRESENTS, WARRANTS AND AGREES:

(a) The Permitted Area shall be used for the above-specified Purpose of Revocable Permit. In no event shall the Authorized Structure be enlarged or otherwise expanded beyond its current size or location.

(b) The Authorized Structure shall be maintained by Permittee in compliance with all applicable codes, ordinances, rules and regulations of City and this Permit.

(c) If the Revocable Permit is issued for a sidewalk café, the Permittee and sidewalk café shall be subject to all the provisions, conditions and requirements contained in section 9-10-84 of the Pueblo Municipal Code, or as same may be amended, which are incorporated herein by reference. In addition, the Authorized Structure shall not be tied-down or chained to any tree within or adjacent to the Permitted Area nor shall the Authorized Structure hinder or interfere with the opening of motor vehicle doors or passenger movement to and from motor vehicles parked adjacent to or near the Permitted Area.

(d) Before the Time of the Ending Date, or immediately upon any other termination of this Permit, Permittee shall, at Permittee's expense, remove the Authorized Structure from the Permitted Area, repair any damage caused by such removal and restore the Permitted Area to a condition compliant with all existing laws. Failure to timely remove the Authorized Structure from the Permitted Area, repair any damage caused by such removal and restore the Permitted Area to a condition compliant with all existing laws shall constitute Permittee's abandonment of the Authorized Structure, and the City may, at Permittee's expense, remove the Authorized Structure from the Permitted Area, repair any damage caused by such removal and restore the Permitted Area to a condition compliant with all existing laws. Permittee agrees to pay all City's costs and expenses, including reasonable attorney fees, incurred in the enforcement of this Permit.

(e) Permittee shall keep the Authorized Structure and Permitted Area in good, clean and safe condition and repair, free from litter, waste and debris.

(f) Permittee shall indemnify, defend and hold City, its officers, agents and employees harmless from and against any and all suits, claims, liabilities, loss, damages and expenses, including reasonable attorney fees and cost of defense, arising, directly or indirectly, from or caused by the issuance of this Permit or the conditions hereof, or the existence, repair or maintenance of the Authorized Structure in the Permitted Area, or the use of the Permitted Area or Authorized Structure by Permittee, its officers, agents, employees, invitees or general public.

(g) Neither this Permit nor any of the privileges granted to Permittee hereby, may be conveyed, assigned, transferred or sublet by Permittee without the prior written consent of the City Council of City. Any attempted conveyance, assignment, transfer or subletting of the Permit or Permitted Area without the written consent of the City Council of Pueblo shall be void and of no effect and shall cause this Permit to be automatically revoked.

(h) Permittee shall keep and maintain commercial general liability insurance covering the Permitted Area and the Authorized Structure in amounts not less than $1,000,000.00 combined single limits per occurrence and aggregate, naming the City as an additional insured and contain a waiver of rights of subrogation against City. A certificate for such insurance CA – 4/6/10 and each renewal thereof shall be delivered to the City. Failure to maintain such insurance shall cause this Permit to be automatically revoked.

(i) Trees, landscaping and shrubbery within or adjacent to the Permitted Area shall be protected from damage or injury by Permittee and shall not be removed except after receipt by the Permittee of the written consent of the City's Director of Parks and Recreation.

(j) Any notice or other document required or permitted herein shall be in writing and delivered personally or by first class mail, postage prepaid, as follows:

(i) If to Permittee, at the address shown in paragraph 1 above.

(ii) If to City, 1 City Hall Place, Pueblo, Colorado, 81003, Attention: Revocable Permit Review Committee. Each party reserves the right to change its address provided notice of such change is given in accordance with this paragraph (j).

(k) City reserves and is hereby granted by Permittee access to, under and through the Permitted Area for any and all purposes. City may injure, damage or remove Permittee's Authorized Structure in the Permitted Area in exercising the right of access hereby reserved and granted. Permittee assumes the risk of injury, loss and damage to Permittee's Authorized Structure within the Permitted area, and City shall have no responsibility or liability for any damage or injuries thereto, whatsoever the cause, including, but not limited to, the acts or omissions of City, its officers, employees, or agents.

(l) This Permit shall terminate upon the occurrence of any one of the following events: (i) the Time of the Ending Date, (ii) abandonment or non-use by Permittee for a period of three (3) consecutive months, (iii) surrender or cancellation of the Permit in writing by Permittee, (iv) automatic revocation as provided in paragraphs (g) and (h) above; or (v) revocation or termination of this Permit by resolution of the City Council of City.

(m) Permittee acknowledges and agrees that this Permit is temporary and subject to revocation or termination by resolution of the City Council of City, in its sole discretion, for any reason or no reason, at anytime, without liability to City, and without notice to or hearing by Permittee. Permittee waives any and all right or claim to such notice, hearing, and liability of the City.

Signed in Pueblo, Colorado this _____ day of _____, 20_____.

PERMITTEE:

Organization or Individual: _____

By: _____

Title: _____

STATE OF COLORADO)

COUNTY OF PUEBLO) SS..

The foregoing instrument was acknowledged before me the _____ day of _____, 20_____ by _____ as _____.

My commission expires: _____.

_____

Notary Public

APPROVED this _____ day of _____, 20____.
PUEBLO, a Municipal Corporation

By _____

Heather Graham, Mayor

Docusign Envelope ID: 1DDD049B-FCF9-4559-95A9-751907C4636E

City Clerk's Office Item # M12

Background Paper for Proposed Resolution

COUNCIL MEETING DATE: November 11, 2024

TO: President Mark Aliff and Members of City Council

CC: Mayor Heather Graham

VIA: Marisa Stoller, City Clerk

FROM: Alyssa Parga, Secretary to the Mayor

SUBJECT: A RESOLUTION RATIFYING PACOG'S JOINT APPOINTMENT OF LYNDSEY CALDWELL TO THE COMMUNITY SERVICES ADVISORY COMMISSION (CSAC)

SUMMARY:

This resolution ratifies the joint City-County appointment of a member to serve on the Community Services Advisory Commission (CSAC).

PREVIOUS COUNCIL ACTION:

Joint City-County appointments to the Community Services Advisory Commission (CSAC) are made on an annual basis selecting individuals to serve expiring or vacant terms. Resolutions to ratify the joint appointments are passed by each entity.

BACKGROUND:

There is one joint vacancy on the Community Services Advisory Commission (CSAC). During the PACOG meeting October 24, 2024, the BOCC and City Council members reviewed the applications and appointed Lyndsey Caldwell to the Community Services Advisory Commission (CSAC).

FINANCIAL IMPLICATIONS:

This is a volunteer committee and members serve without compensation.

BOARD/COMMISSION RECOMMENDATION:

N/A

STAKEHOLDER PROCESS:

N/A

Docusign Envelope ID: 1DDD049B-FCF9-4559-95A9-751907C4636E

ALTERNATIVES:

City Council in agreement with the County Commissioners could remove the Resolution from the Agenda, and request that the recruitment process be extended in order to receive additional applications for consideration.

RECOMMENDATION:

Approval of the Resolution.

ATTACHMENTS:

None

Docusign Envelope ID: 1DDD049B-FCF9-4559-95A9-751907C4636E

RESOLUTION NO. 15816

A RESOLUTION RATIFYING PACOG'S JOINT APPOINTMENT OF LYNDSEY CALDWELL TO THE COMMUNITY SERVICES ADVISORY COMMISSION (CSAC)

WHEREAS, PACOG duly convened and appointed Lyndsey Caldwell to complete a four-year term on the Community Services Advisory Commission (CSAC) expiring on April 30, 2026; it is now the desire of the Pueblo City Council to ratify said appointment; and

BE IT RESOLVED BY THE CITY COUNCIL OF PUEBLO, that

SECTION 1.

The joint appointment of Lyndsey Caldwell to the Community Services Advisory Commission (CSAC) to complete a four-year term expiring April 30, 2026, shall be and hereby is ratified.

SECTION 2.

The officers and staff of the City are authorized to perform any and all acts consistent with this Resolution to implement the appointment described herein.

SECTION 3.

This Resolution shall become effective immediately upon final passage.

INTRODUCED: November 11, 2024

BY: Regina Maestri
MEMBER OF CITY COUNCIL

DocuSigned by:
Mark Aliff
B7A4F51823AB462...

APPROVED: _____
PRESIDENT OF CITY COUNCIL

DocuSigned by:
7C02EBDFFC3D43C...

ATTESTED BY: _____
CITY CLERK

Docusign Envelope ID: 1DDD049B-FCF9-4559-95A9-751907C4636E

City Clerk's Office Item # M13

Background Paper for Proposed Resolution

COUNCIL MEETING DATE: November 11, 2024

TO: President Mark Aliff and Members of City Council

CC: Mayor Heather Graham

VIA: Marisa Stoller, City Clerk

FROM: Alyssa Parga, Secretary to the Mayor

SUBJECT: A RESOLUTION RATIFYING PACOG'S JOINT APPOINTMENT OF AMY HURTIG-SMITH TO THE BUILDING BOARD OF APPEALS - ARCHITECT POSITION

SUMMARY:

This resolution ratifies the joint City-County appointment of a member to serve on the Building Board of Appeals.

PREVIOUS COUNCIL ACTION:

Joint City-County appointments to the Building Boards of Appeals are made on an annual basis selecting individuals to serve expiring or vacant terms. Resolutions to ratify the joint appointments are passed by each entity.

BACKGROUND:

There is one joint vacancy for an architect on the Building Boards of Appeals. During the PACOG meeting October 24, 2024, the BOCC and City Council members reviewed the applications and appointed Amy Hurtig-Smith to the Building Board of Appeals.

FINANCIAL IMPLICATIONS:

This is a volunteer committee and members serve without compensation.

BOARD/COMMISSION RECOMMENDATION:

N/A

STAKEHOLDER PROCESS:

N/A

Docusign Envelope ID: 1DDD049B-FCF9-4559-95A9-751907C4636E

ALTERNATIVES:

City Council in agreement with the County Commissioners could remove the Resolution from the Agenda, and request that the recruitment process be extended in order to receive additional applications for consideration.

RECOMMENDATION:

Approval of the Resolution.

ATTACHMENTS:

None

Docusign Envelope ID: 1DDD049B-FCF9-4559-95A9-751907C4636E

RESOLUTION NO. 15817

A RESOLUTION RATIFYING PACOG'S JOINT APPOINTMENT OF AMY HURTIG-SMITH TO THE BUILDING BOARD OF APPEALS - ARCHITECT POSITION

WHEREAS, PACOG duly convened and appointed Amy Hurtig-Smith to complete a four-year term on the Building Board of Appeals expiring on April 30, 2026; it is now the desire of the Pueblo City Council to ratify said appointment; and

BE IT RESOLVED BY THE CITY COUNCIL OF PUEBLO, that

SECTION 1.

The joint appointment of Amy Hurtig-Smith to the Building Board of Appeals in the Architect position to complete a three-year term expiring July 1, 2026, shall be and hereby is ratified.

SECTION 2.

The officers and staff of the City are authorized to perform any and all acts consistent with this Resolution to implement the appointment described herein.

SECTION 3.

This Resolution shall become effective immediately upon final passage.

INTRODUCED: November 11, 2024

BY: Regina Maestri
MEMBER OF CITY COUNCIL

APPROVED: DocuSigned by: Mark Alliff
B7A4E51823AB462...
PRESIDENT OF CITY COUNCIL

ATTESTED BY: DocuSigned by:
7C02EBDFEC3D43C...
CITY CLERK

Docusign Envelope ID: 1DDD049B-FCF9-4559-95A9-751907C4636E

City Clerk's Office Item # M14

Background Paper for Proposed Resolution

COUNCIL MEETING DATE: November 11, 2024

TO: President Mark Aliff and Members of City Council

CC: Mayor Heather Graham

VIA: Marisa Stoller, City Clerk

FROM: Alyssa Parga, Secretary to the Mayor

SUBJECT: A RESOLUTION RATIFYING PACOG'S JOINT APPOINTMENT OF ADELIA "DAWN" TRIPP-SENA TO THE PUEBLO HUMAN RELATIONS COMMISSION

SUMMARY:

This resolution ratifies the joint City-County appointment of a member to serve on the Pueblo Human Relations Commission.

PREVIOUS COUNCIL ACTION:

Joint City-County appointments to the Pueblo Human Relations Commission are made on an annual basis selecting individuals to serve expiring or vacant terms. Resolutions to ratify the joint appointments are passed by each entity.

BACKGROUND:

There is one joint vacancy on the Pueblo Human Relations Commission. During the PACOG meeting on October 24, 2024, the BOCC and City Council members reviewed the applications and appointed Adelia "Dawn" Tripp-Sena to the Pueblo Human Relations Commission.

FINANCIAL IMPLICATIONS:

This is a volunteer committee and members serve without compensation.

BOARD/COMMISSION RECOMMENDATION:

N/A

STAKEHOLDER PROCESS:

N/A

Docusign Envelope ID: 1DDD049B-FCF9-4559-95A9-751907C4636E

ALTERNATIVES:

City Council in agreement with the County Commissioners could remove the Resolution from the Agenda, and request that the recruitment process be extended in order to receive additional applications for consideration.

RECOMMENDATION:

Approval of the Resolution.

ATTACHMENTS:

None

Docusign Envelope ID: 1DDD049B-FCF9-4559-95A9-751907C4636E

RESOLUTION NO. 15818

A RESOLUTION RATIFYING PACOG'S JOINT APPOINTMENT OF ADELIA "DAWN" TRIPP-SENA TO THE PUEBLO HUMAN RELATIONS COMMISSION

WHEREAS, PACOG duly convened and appointed Adelia "Dawn" Tripp-Sena to complete a four-year term on the Pueblo Human Relations Commission expiring on December 31, 2026; it is now the desire of the Pueblo City Council to ratify said appointment; and

BE IT RESOLVED BY THE CITY COUNCIL OF PUEBLO, that

SECTION 1.

The joint appointment of Adelia "Dawn" Tripp-Sena to the Pueblo Human Relations Commission to complete a three-year term expiring December 31, 2026, shall be and hereby is ratified.

SECTION 2.

The officers and staff of the City are authorized to perform any and all acts consistent with this Resolution to implement the appointment described herein.

SECTION 3.

This Resolution shall become effective immediately upon final passage.

INTRODUCED: November 11, 2024

BY: Regina Maestri
MEMBER OF CITY COUNCIL

DocuSigned by:
Mark Aliff
B7A4F51823AB462...

APPROVED: _____
PRESIDENT OF CITY COUNCIL

DocuSigned by:
7C02EBDFEC3D43C...

ATTESTED BY: _____
CITY CLERK

Docusign Envelope ID: 1DDD049B-FCF9-4559-95A9-751907C4636E

City Clerk's Office Item # M15

Background Paper for Proposed Resolution

COUNCIL MEETING DATE: November 11, 2024

TO: President Mark Aliff and Members of City Council

CC: Mayor Heather Graham

VIA: Marisa Stoller, City Clerk

FROM: Andrew Hayes, Public Works Director

SUBJECT: A RESOLUTION ADOPTING AND APPROVING THE 2025 STANDARD CONSTRUCTION SPECIFICATIONS AND STANDARD DETAILS FOR THE CITY OF PUEBLO, COLORADO

SUMMARY:

This Resolution adopts the 2025 Standard Construction Specifications and Standard Details for the City of Pueblo, Colorado.

PREVIOUS COUNCIL ACTION:

City Council adopted the current Standard Construction Specifications and Standard Details by Resolution 14853, dated April 11, 2022.

Subsequently, the Standards were revised by Resolutions 15088, 15114 and 15139, approved on December 12, 2022, January 9, 2023, and February 13, 2023.

BACKGROUND:

The Public Works Department – in coordination with other departments responsible for managing the City of Pueblo Public Infrastructure Systems – develops construction standards and specifications that apply to all City of Pueblo projects. The Standards also apply to construction work performed by developers and builders responsible for constructing public improvements in residential, commercial, and industrial developments within the City of Pueblo.

These standards ensure the public infrastructure can safely meet the needs and demands of the public; and that the City of Pueblo remains in compliance with State and Federal law; and that the City of Pueblo responsibly approaches the management of the *Total Life-Cycle cost* of constructing, operating, and maintaining its infrastructure systems. The Standards generally do not specify *what types* of improvements must be constructed for a given project, but they do address the required quality, materials, dimensions, capacities, and other physical and functional characteristics for our public

Docusign Envelope ID: 1DDD049B-FCF9-4559-95A9-751907C4636E

infrastructure systems.

FINANCIAL IMPLICATIONS:

Not applicable.

BOARD/COMMISSION RECOMMENDATION:

Not applicable.

STAKEHOLDER PROCESS:

Since implementation of the Standard Construction Specifications and Standard Details in April 2022, the City of Pueblo has continued to engage with the Committee of Community Development (made up of local engineers, designers, builders, developers, representatives from PEDCO, and City Council members) to review and provide feedback on the Standards.

The Public Works Department desires to continue working with the Committee and other stakeholders on an annual basis to discuss specific areas of concern and any issues that may arise over time with respect to the Standard Construction Specifications and Standard Details.

ALTERNATIVES:

The existing Standard Construction Specifications and Standard Details will remain in effect if the Resolution is not approved.

RECOMMENDATION:

Approval of the Resolution.

ATTACHMENTS:

1. 2025 Standard Construction Specifications and Standard Details

Docusign Envelope ID: 1DDD049B-FCF9-4559-95A9-751907C4636E

RESOLUTION NO. 15819

A RESOLUTION ADOPTING AND APPROVING THE 2025 STANDARD CONSTRUCTION SPECIFICATIONS AND STANDARD DETAILS FOR THE CITY OF PUEBLO, COLORADO

BE IT RESOLVED BY THE CITY COUNCIL OF PUEBLO, that

SECTION 1.

Pursuant to and in furtherance of sections 4-2-2 (8), 12-3-1, 12-4-7 (J)(2), 12-4-7(J)(5)(b), 12-4-7 (J)(5)(c), 12-4-7 (J)(8), 12-6-5 (f), and 12-6-9 of the 1971 Code of Ordinances of the City of Pueblo, as amended, and upon recommendation by the City Engineer, City Council does approve the revisions to the Standard Construction Specifications and Standard Details for the City of Pueblo, Colorado, published December 1, 2024, by the Department of Public Works, a true copy of which is attached hereto and made a part hereof by reference (hereinafter referred to as the "2025 Standard Specifications").

SECTION 2.

After adoption of this Resolution, a true copy of the Standard Specifications, as revised, shall be maintained on file in the office of the City Clerk for public inspection. Copies of the Standard Specifications, as revised, shall be made available through the City's Department of Public Works and on the City of Pueblo Website.

SECTION 3.

This Resolution and the 2025 Standard Construction Specifications and Standard Details are hereby approved and adopted amend and supersede in their entirety Resolution numbers 14853, 15088, 15114, and 15139, and the prior Standard Construction Specifications and Standard Details - including all revisions previously adopted by said Resolutions.

SECTION 4.

The officers of the City are authorized to perform any and all acts consistent with the intent of the Resolution to implement the policies and procedures described herein.

Docusign Envelope ID: 1DDD049B-FCF9-4559-95A9-751907C4636E

SECTION 5.

This Resolution shall become effective immediately upon final approval.

INTRODUCED: November 11, 2024

BY: Regina Maestri
MEMBER OF CITY COUNCIL

APPROVED: DocuSigned by: Mark Alliff B7A4F51823AB402...
PRESIDENT OF CITY COUNCIL

ATTESTED BY: DocuSigned by: 7C02EBDFFC3D43C...
CITY CLERK

2025 STANDARD CONSTRUCTION SPECIFICATIONS
AND
STANDARD DETAILS

FOR

CITY OF PUEBLO, COLORADO

DEPARTMENT OF PUBLIC WORKS
211 EAST “D” STREET
PUEBLO, COLORADO

TELEPHONE: (719) 553-2295
WWW.PUEBLO.US

ADOPTED: November 11, 2024

{This Page Intentionally Left Blank}

PREFACE

The specifications contained herein have been prepared by the Department of Public Works of the City of Pueblo in accordance with Title XII of the 1970 Code of Ordinances, adopted by Resolution Number _____ of the City Council.

These specifications shall apply to the construction of all public improvements within the public right-of-way of the City of Pueblo, City owned property, and to those improvements on private property which have been made a requirement of any subdivision improvement agreement.

Methods of measurement and payment specified herein shall only apply to City contracts.

Where the term “Engineer” is used in these specifications it shall mean the Director of Public Works or his authorized representative.

{This Page Intentionally Left Blank}

TABLE OF CONTENTS

Abbreviations

Accuracy

Standard Specifications

Article 4	Concrete
Article 5	Reinforcement for Structural Concrete
Article 6	Aggregate Base Course
Article 7	Earthwork
Article 8	Pavement
Article 9	Traffic Control
Article 10	Landscaping
Article 11	Sanitary Sewer
Article 12	Storm Sewer

Standard Details

SD1	Typical Street Intersection
SD2	Square Pan and Cross Pan Detail
SD3	Concrete Curb and Gutter, Double Gutter and Cross Pan
SD4	Attached Sidewalk Details
SD5	Typical Alley Approach & Driveway Detail for Setback Sidewalk
SD6	Typical Alley Approach & Driveway Detail for Attached Sidewalk
SD7	Curb Ramp Details – Type A Ramp
SD8	Curb Ramp Details – Type B Ramp
SD9	Curb Ramp Details – Type C Ramp
SD10	Curb Ramp Details – Type D Ramp
SD11	Curb Ramp Details – Detectable Warning Surfaces
SD12	Curb Ramp Details – Cross Section
SD13	Expansion Joint & Dowel Details
SD14	Sidewalk Drain Detail

SD15	Sidewalk Culvert Detail
SD16	Joint Placement & Width Standards for Sidewalk, C&G and Alleys
SD17	General Requirements for Driveways
SD18	Knuckle and “T” Intersection Detail
SD19	Cul-De-Sac Detail
SD20	Adjustment Details
SD21	Standard Type III Barricade
SD22	Sanitary Sewer Trench Detail
SD23	Sanitary Sewer Manhole Details
SD24	Sanitary Sewer Manhole Details
SD25	Sanitary Sewer Manhole Details
SD26	Manhole and Inlet Ring, & Cover Detail
SD27	Sanitary Sewer Encasement Details
SD28	Right of Way Monument Standard
SD29	Curb Side Mailboxes
SD30	Sanitary Sewer Main Cleanout
SD31	Tracer Wire Specifications
SD32	Tracer Wire Specifications
SD33	Tracer Wire Specifications
SD34	Tracer Wire Sample Storm Sewer Plan – Storm Sewer
SD35	Tracer Wire Lateral Detail - Storm Sewer
SD36	Tracer Wire Details - Storm Sewer
SD37	Tracer Wire Sample Plan - Sanitary Sewer
SD38	Tracer Wire Details - at Sanitary Sewer
SW1.1	Inlet, Type C (1 of 2)
SW1.2	Inlet, Type C (2 of 2)
SW2.1	Inlet, Type D (1of 2)
SW3.1	Inlet, Type R (1 of 4)
SW3.2	Inlet, Type R (2 of 4)

SW3.3	Inlet, Type R (3 of 4)
SW3.4	Inlet, Type R (4 of 4)
SW4.1	Inlet, Type 13 (1 of 2)
SW4.2	Inlet, Type 13 (2 of 2)
SW5.1	Inlet, Type 16 (1 of 6)
SW5.2	Inlet, Type 16 (2 of 6)
SW5.3	Inlet, Type 16 (3 of 6)
SW5.4	Inlet, Type 16 (4 of 6)
SW5.5	Inlet, Type 16 (5 of 6)
SW5.6	Inlet, Type 16 (6 of 6)
SW6.1	Grate & Frame - Adjustable Curb Box (1 of 2)
SW6.2	Grate & Frame - Adjustable Curb Box (2 of 2)
SW7	Storm Sewer Trench
SW8	Storm Manhole
SW9	Storm Mahole Bases
SW10	Manhole Steps & Flat Top Section
SW11	Storm Pipe Dissimilar Connection

{This Page Intentionally Left Blank}

ABBREVIATIONS

Whenever in these specifications the following terms, or pronouns in place of them, are used, the intent and meaning shall be interpreted as follows. Reference to a specific standard or specification shall mean the latest edition or amendment in effect on date of invitation to bid. In those cases where work is being performed which is not contracted for directly by the City, then the latest standard in effect at the time the work is being done shall apply.

AAR	Association of American Railroads
AASHTO	American Association of State Highway and Transportation Officials
ACI	American Concrete Institute
ADA	Americans with Disabilities Act of 1990
ADAAG	Americans with Disabilities Act Accessibility Guidelines
AI	Asphalt Institute
AISC	American Institute of Steel Construction
AISI	American Iron and Steel Institute
AITC	American Institute of Timber Construction
ANSI	American National Standards Institute
ASTM	American Society for Testing and Materials
ATSSA	American Traffic Safety Services Association
AWG	American Wire Gauge
AWS	American Welding Society
BMPS	Best Management Practices
CBR	California Bearing Ratio
CDOT	Colorado Department of Transportation
CDPHE	Colorado Department of Public Health and Environment
CFRP	Carbon Fiber Reinforced Polymer
CLSM	Controlled Low Strength Materials
CRS	Colorado Revised Statutes, 1973 as amended
CRSI	Concrete Reinforcing Steel Institute

CY	Cubic Yard
FRP	Fiber Reinforced Polymer
GFRP	Glass Fiber Reinforced Polymer
GPH	Gallons Per Hour
HP	Horsepower
ISSA	International Slurry Surfacing Association
LP	Pound
LL & PI	Liquid Limit / Plasticity Index
MPH	Miles Per Hour
MUTCD	Manual of Uniform Traffic Control Devices
NACE	National Association of Corrosion Engineers
NSF	National Sanitation Foundation
NTPEP	National Transportation Product Evaluation Program
O.D.	Outside Diameter
OSHA	Occupational Safety and Health Administration
PCA	Portland Cement Association
PLS	Pure Live Seed
PSIG	Pound Per Square Inch Gauge
PVC	Polyvinyl Chloride
RAP	Recycled Asphalt Product
RC	Recycled Concrete
RE	Removability Modulus
SWMP	Stormwater Management Plan
UL	Underwriter's Laboratories
WWPA	Western Wood Products Association

MEASUREMENT AND CALCULATED QUANTITY ACCURACY

All quantities for payment shall be field measured (where applicable), calculated and rounded to the degree of accuracy given below.

UNIT	ACCURACY
Lump Sum (%)	x.
Each	x.
Linear Foot	x.x
Square Feet	x.x
Square Yard	x.x
Cubic Yard	x.x
Gallon	x.
Ton	x.x
Acre	x.x

Rounding of numbers shall be as follows:

0.1 thru 0.4 - round down to zero
0.5 - round up if it makes the whole number even, down if the whole number is even
0.6 thru 0.9 - round up to next whole number

Examples: 93.3 rounds to 93
93.5 rounds to 94
94.5 rounds to 94
93.7 rounds to 94

{This Page Intentionally Left Blank}

ARTICLE 4
CONCRETE

4.1 GENERAL

4.1.1 DESCRIPTION

The work under this section shall consist of the furnishing of all labor and materials necessary for the placing and finishing of concrete in accordance with these specifications and conforming to the lines, grades, and dimensions shown on the drawings (approved by the Engineer) or the City Standard Details. Concrete shall consist of Portland cement, fine and coarse aggregates, and water, together with any specified additives or admixtures proportioned and mixed in conformity with the following specifications.

4.1.2 SUBMITTALS

4.1.2.1 General

Concrete submittals outlined below are required on all City contracts and any other project within the public right-of-way. All ready-mix suppliers furnishing concrete for placement within any City right-of-way shall furnish to the City once every two years, concrete mix designs for concrete intended to be used for placement within the right-of-way.

4.1.2.2 Mix Design

Unless a mix design has been previously approved as required under Section 4.1.2.1, the Contractor shall submit copies of all concrete mix designs to the Engineer for approval prior to placing any concrete. Separate mix designs shall be submitted for each type of concrete to be used in the project. Submittals shall include all information used in designing mixes, including admixture manufacturer's information.

4.1.3 QUALITY ASSURANCE

4.1.3.1 Plant Access

The Engineer shall be allowed access to the ready-mix batching plant at all times that the work is in progress. If required by the Engineer, samples of all concrete ingredients may be taken at the plant.

4.1.3.2 Record of Work

The Contractor shall keep a written record listing approximate locations, time and date of placement of all concrete for the project. Such record shall be kept until completion of the project and shall be available to the Engineer for review at any time.

4.1.3.3 Codes and Industry Standards

The Contractor is responsible for ensuring that all materials, formwork, and finishes comply with all applicable codes and industry standards as prescribed by ASTM, AASHTO, and/or ACI.

4.2 MATERIALS

All concrete shall be ready-mixed conforming to AASHTO M 157-13 (2017). No jobsite mixed concrete will be permitted unless written permission is granted by the Engineer.

4.2.1 GENERAL

4.2.1.1 Cement

Portland Cement shall conform to the specifications for Portland Cement (ASTM C-150) and specifications for air-entrained Portland Cement (ASTM C-175 or C-595) and shall otherwise be Type II cement unless sulfate conditions allow otherwise. Refer to Table 2.3 in Chapter 2.2 of ACI 201 for cement recommendations for sulfate resistances. In addition to the standard chemical requirements for Portland cement in ASTM C-150, the maximum percent of alkali shall be specified in Table 2 of ASTM C-150 for low alkali cement. Other types of cement or admixtures are only to be used upon approval by the Engineer.

Type II (6 Sack), Type IP, or Type IL is required for all sidewalks, driveways, curb and gutter, drainage pans, headwalls, wingwalls, and concrete paving. Type II (7 Sack), Type IP (HS), Type IL (HS) (in lieu of type V cement) will be acceptable for cast-in-place inlets and cast in place manhole bases. Type II (7 Sack), Type IP (HS), or Type IL (HS) is required for all *precast* box culverts, inlets, manhole bases, manhole barrel sections, and manhole cone sections.

4.2.1.2 Fly Ash and Natural Pozzolan FLY

Use of fly ash or natural pozzolan (ASTM C-618 **Class F; or Class N**) ~~for~~ as a partial substitute (25% maximum by weight) for Type I/II, Type IP (HS), Type IL (HS), or Type V cement may be used with written permission from the City Engineer. Fly ash or natural pozzolan shall conform to the requirements of ASTM C-618 – **Class F** or **Class N,** respectively. Cement containing **Class C** fly ash shall not be used for any concrete where these specifications are applicable.

4.2.1.3 Aggregate

(a) Fine Aggregate

Fine aggregate shall conform to ASTM C-33. Fine aggregate shall be natural sand composed of clean, hard, durable, uncoated grains, preferably of siliceous materials. Fine aggregate shall be thoroughly washed to remove shale, coal, mica, clay, loam, alkali, organic matter, or other deleterious matter.

(1) Deleterious Substances. The percentage of deleterious substances in the washed aggregate shall not exceed the values in Table 4.1

Table 4.1. Maximum percentage of deleterious substances in the washed fine aggregate

Material	ASTM	Limit
Material finer than 200 mesh sieve	C117	3% by weight
Shale	Petrographic analyses	1% by weight
Coal & Lignite	C123	0.5% by weight
Clay lumps and friable particles	C142	3% by weight
Organic Impurities	C40	Plate 3
Sulfate Soundness	C88	10% by weight (Sodium Sulfate) 15% by weight (Magnesium Sulfate)

The sum of the percentages of the above deleterious substances shall not exceed 5% by weight.

(2) Gradation. Fine aggregate shall be well graded and conform to AASHTO M6 as shown in CDOT Specifications Section 703, Table 703-1 and Table 4.3 below.

(b) Coarse Aggregate

Coarse aggregate shall conform to ASTM C-136. Coarse aggregate shall consist of crushed limestone, trap rock, granite, washed gravel, or other approved inert materials having clean, hard, strong, durable pieces, free from adherent coating, and conforming to the requirements of these specifications. Coarse aggregate shall be thoroughly washed of clay, loam, bark, sticks, alkali, organic matter, shale, coal, mica, or other deleterious material.

(1) Deleterious Substances. The percentage of deleterious substances in the washed aggregate shall not exceed the values in Table 4.2.

Table 4.2. Maximum percentage of deleterious substances in the washed coarse aggregate

Material	ASTM	Limit
Material finer than 200 mesh sieve	C117	1% by weight
Lightweight fragments (specific gravity < 2.4)	C123	3% by weight
Coal and lignite (specific gravity < 2.4)	C123	0.5% by weight
Clay lumps and friable particles	C142	3% by weight
Abrasion	C131/C535	50% by weight
Sulfate Soundness	C88	12% by weight (Sodium Sulfate) 18% by weight (Magnesium Sulfate)

Non-aggregate materials such as wood, sealant, and backer-rod are considered deleterious substances. The sum of the percentages of the above deleterious substances shall not exceed 5% by weight.

(2) Gradation. Coarse aggregate shall be well graded and conform to AASHTO M43 and CDOT Specifications Section 703, Table 703-1. The gradation shall be in compliance with designation No. 67 per Table 4.3.

Other gradations may be used when approved by the Engineer.

Table 4.3 Concrete Aggregate Gradation Table (Percent Passing Sieve Sizes)

Sieve Size	Fine aggregate No. M6, Class A	Coarse aggregate No. 67
1”	-	100%
3/4”	-	90-100%
1/2"	-	-
3/8”	100%	20-55%
No. 4	95-100%	0-10%
No. 8	80-100%	0-5%
No. 16	50-85%	-
No. 50	10-30%	-
No. 100	2-10%	-

4.2.1.4 Air Entraining Admixtures

All air-entraining admixtures shall comply with AASHTO M-154.

4.2.1.5 Chemical Admixtures

All chemical admixtures for concrete shall comply with AASHTO M-194. The use of calcium chloride as an accelerator is prohibited.

4.2.1.6 Water

Water used in mixing, curing, or other applications shall be reasonably clean and free of oil, salt, acid, alkali, sugar, vegetable matter, or any other substance injurious to the finished product. Concrete mixing water shall comply with ASTM C1602. Water known to be of potable quality may be used without further testing.

4.2.1.7 Curing Materials

Curing materials shall conform to the requirements in Table 4.4.

Table 4.4 Concrete curing materials

Material	Requirement
Burlap Cloth made from Jute or Kenaf	AASHTO M-182
Liquid Membrane-Forming Compounds for Curing Concrete	ASTM C309
Sheet Materials for Curing Concrete	AASHTO M-171*

*Only the performance requirements of AASHTO M-171 shall apply.

4.2.1.8 Expansion Joint

Expansion joints shall be constructed with 1/2″ preformed expansion joint filler, conforming to Federal Specifications MR-F-341 or wood board conforming to AASHTO Designation M-90.

4.2.1.9 Joint Sealant, Backer Rod & Expansion Joint

The joint sealant for all sawed longitudinal and transverse joints shall be a silicone joint sealant meeting ASTM D5893. ASTM C1193 provides guidance for the use of joint sealants.

Blocking medium shall be an expanded closed cell polyethylene foam backer rod or non-plastic rope that is compatible with the joint sealant material and meets ASTM C1330, Type C or ASTM D5249.

Polyethylene expansion joint materials shall be flexible, low density, expanded extruded polyethylene plank formed by the expansion of polyethylene base resin, extruded as a multicellular, closed cell, homogeneous foamed polyethylene. Laminations shall not be permitted. The joint material shall conform to ASTM D1751, ASTM D1752, or ASTM D8139.

4.2.2 QUALITY OF CONCRETE

The proportioning of aggregate to cement shall be such as to produce a good workable mix and the slump shall be a maximum of 5″ as per ASTM C-143 or as approved by the Engineer. The equipment for batching of the aggregates, cement, water, and air-entraining agent shall be such that accurate control can be held over the various constituents.

Ready-mixed concrete shall comply with ASTM C-94 for ready-mixed concrete and the following specifications:

4.2.2.1 Time of Haul

Concrete transportation in truck mixers or truck agitators shall be delivered to the site of work and completely discharged within a period of 90 minutes after the cement comes in contact with the mixing water or with the combined aggregates when the combined aggregates contain free moisture in excess of 2% by weight. If hot weather exists causing the temperature of the concrete to rise above 90° F, then the time of haul shall be within a period of 60 minutes.

4.2.2.2 Production and Delivery

The production and the delivery of ready-mixed concrete shall be such that placing and finishing shall be continuous so long as the operations require.

4.2.2.3 Concrete Mix Design

Concrete mix shall be designed per Tables 4.5, 4.6 or 4.7 based on the design criteria

Table 4.5. 6-Sack Concrete Mix

Specification	Requirement
Specified Compressive Strength at 28 Days	4,000 PSI
Minimum Cement Content per Cubic Yard	564 LBS (6 Sack)
Maximum Water/Cement Ratio by Weight	0.45
Air Content	6% +/- 1.5%
Slump	3″ – 5″

Table 4.6. 7-Sack Concrete Mix

Specification	Requirement
Specified Compressive Strength at 28 Days	4,500 PSI
Minimum Cement Content per Cubic Yard	658 LBS (7 Sack)
Maximum Water/Cement Ratio by Weight	0.45
Air Content	6% +/- 2.0%
Slump	3″ – 5″

Table 4.7. Caisson Concrete Mix

Specification	Requirement
Specified Compressive Strength at 28 Days	4,000 PSI
Minimum Cement Content per Cubic Yard	610 LBS/CY
Maximum Water/Cement Ratio by Weight	0.45
Air Content	N/A
Slump	6″ – 9″

See CDOT specification 601.02, Class BZ for additional requirements.

4.2.3 CONTROLLED LOW STRENGTH MATERIALS (CLSM)

The term CLSM used in this Section shall mean the same as Removable CLSM or flowable backfill. This material is covered in detail due to the many time saving and engineering benefits of this type of backfill material. CLSM does not need compacting, or moisture density compaction testing. Only a few physical tests of the CLSM properties are needed to assure durability and future removability with light excavating equipment. A low strength is desired so that surrounding utilities or structures will be accessible without causing damage if the CLSM must be removed in the future. Air entrainment is required to prevent damage and heave displacement of trench patches due to freeze-thaw damage.

In addition, CLSM may be used for other applications apart from trench or street cut backfill. These include filling voids due to pipe abandonment or undercutting of excavation in caving or normal soils. CLSM offers quick restoration of the trench and improving other subgrade conditions for roadway or structure support in a rapid time frame without the need for traditional soil backfill testing requirements or when a quick strength is needed to support upper layers. These benefits may outweigh the extra costs vs. using traditional methods that require compaction and testing.

Other applications include: backfilling behind retaining walls and abutments, filling void areas including pipe abandonment, annular spaces, undercut areas and other approved void filling applications. Other suitable applications include structural support for utilities and replacement of unstable subgrade during pavement repairs. Utility types that can utilize CLSM include: conduits or pipes for electrical, wired or fiber optic communications, traffic signal or other utilities such as gas and water lines, sanitary and storm sewer lines, and other types of utilities under

existing pavements or ground surfaces to be built upon or improved later.

The objectives of requiring the use of the CLSM specified below, instead of reusing excavated soils, is to provide a self-leveling, frost heave-resistant, non-settling, controlled low-strength material (defined by American Concrete Institute in ACI 229 as a CLSM), that does not normally require compacting and compaction testing. Traditional use of compacted soil or aggregate materials for trench backfill shall require City approval and testing for acceptance.

4.2.3.1 Requirements for CLSM

This requirement specifies two distinct CLSM material products: Flashfill and Flow-Fill. The Flashfill products will allow trench backfill, temporary or permanent pavement restoration and traffic access to occur more quickly than Flow-Fill. The term 'CLSM' in this section shall mean either or both.

A **high slump** is required to aid in the self-leveling and void filling objective. The visual consistency may appear to range in appearance from thin batter or mud to thick water. It must be foremost removable with light machinery in the future, and quickly stabilize to support paving operations and traffic.

Minimum air contents are required in the top 4' of CLSM fill to limit permanent frost heave. This air content requirement should be used for the entire depth, to aid in the ability to remove or excavate CLSM in the future. The air content requirement may be forbidden by some utility applications, such as for thrust blocks or for pipe bedding normally used for lateral support of pressurized pipes.

A **Removability Modulus (RE)** is specified at a maximum 1.5 and is based on compressive strength and unit weight of the CLSM backfill.

4.2.3.2 CLSM Materials

(a) Flow-Fill

Shall consist of a controlled low strength, self-leveling concrete material composed of various combinations of cement, fly ash, aggregates, water, chemical admixtures and/or cellular foam for air-entrainment. Generally, Flow-Fill may be placed in a maximum of 3′ thick layers, allowing bleed water to rise and divert away from placement before another layer may be added.

The Flow-Fill shall be limited to a maximum Removability Modulus of 1.5 to ensure ability to excavate in the future. Slumps of less than 7″ will not be permitted for placement, since the flowability to fill voids and avoid future settlement is impaired, and strengths may increase beyond specified removability limits.

Submit a mix design for approval by the City Engineer prior to placement. The mix design shall be supported by laboratory test data verifying compliance with air content, slump, strength, and removability (RE) requirements.

Table 4.8. Flow-Fill requirements

Flow-Fill property	Flow-Fill specification
Air Content, ASTM C-231	15-25%
Compressive Strength, ASTM D-4832	125-150 psi at 28 days
Slump, ASTM C-143	7-10″
Removability Modulus, RE	1.5 MAX

See CDOT Section 206 for additional requirements for usage of Flow-Fill.

(b) Flashfill

Flashfill shall consist of a controlled low-strength, self-leveling cementitious material composed of various combinations of fly ash, water, chemical admixtures and/or cellular foam for air-entrainment. No aggregate or sand is usually needed. It shall have a minimum specified air content to provide suitable resistance to frost-heave. Flashfill may generally be placed without lift thickness limits.

Higher strengths may be permitted over Flow-Fill; however, the Flashfill shall still be limited to a maximum removability (RE) of 1.5. Slumps of less than 8″ or spreads of less than 8″ will not be permitted for placement, since the flowability to fill voids and avoid future settlement is impaired, and strengths may increase beyond removability limits.

Submit a mix design for approval by the City Engineer, prior to placement. The mix design shall be supported by laboratory test data verifying compliance with air content, slump, strength, and removability (RE) requirements.

Table 4.9. Flashfill requirements

Flashfill property	Flashfill specification
Air Content, ASTM C-231, or by Section 2D volumetric calculations	15 MIN
Compressive Strength, ASTM D-4832	100-300 psi at 28 days
Slump, ASTM C-143 (one lift, no rodding)	8-11″
Removability Modulus, RE	1.5 MAX
Spread, ASTM D-6103	8-12″, or greater

See CDOT Section 206 for additional requirements for usage of Flashfill.

4.2.4 CURBS AND GUTTERS

4.2.4.1 General

This work shall consist of constructing curbs and gutters of the form and dimensions shown on the plans.

4.2.4.2 Materials

Concrete for construction of combination curbs and gutters shall be a 6-sack mix design per Table 4.5.

4.2.5 SIDEWALK AND CURB RAMPS

4.2.5.1 General

Sidewalks shall be 4″ in thickness and a minimum of 5′ in width for residential and 6′ in width for commercial/industrial, unless approved by the City Engineer. Curb ramps shall be 6″ in thickness. Sidewalks at driveway approaches shall have a minimum thickness of 6″ (residential) and 7″ reinforced (commercial) for the full width. Sidewalks shall have a maximum of 2% cross slope (1:50). All sidewalks and curb ramps shall be constructed to conform to the most current version of the Public Rights-of-Way Accessibility Guidelines (PROWAG) and these specifications.

4.2.5.2 Materials

Concrete for construction of sidewalks and pedestrian ramps shall be a 6-sack mix design per Table 4.5.

4.2.6 CROSSPANS

4.2.6.1 General

Minimum crosspan bases shall be 8′ wide with a 45° angle slope on each side allowing 6′ of exposed concrete surface. The crosspan shall be sloped from each edge to the middle at the slope rate of 1/4″ per foot maximum. The depth of concrete shall be 7″ using #4 @ 18″ O.C. Longitudinal and 24″ O.C. Transverse.

Concrete for construction of crosspans shall be as specified in Section 4.2.2.3. One inch (1″) smooth steel dowls with sleeves or caps shall be installed at expansion joints, and when pouring half pans, spacing shall be @ 1′ O.C. See ARTICLE 5 – STRUCTURAL CONCRETE for specifications.

4.2.6.2 Materials

Concrete for construction of crosspans shall be a 6-sack mix design per Table 4.5.

4.2.7 DRIVEWAY APPROACHES

4.2.7.1 General

Driveway approaches shall be of two types:

(a) Alley & Driveway (Attached Sidewalk). Shall be constructed from cuts in 6″ vertical curb. The curb head shall be transitioned from 6″ to 1-1/2″ at a distance of 4′. See detail SD6.

(b) Alley & Driveway (Detached Sidewalk). Shall be as the Alley & Driveway (Attached Sidewalk), except the sidewalk is detached and 5′ wide. See detail SD5.

4.2.7.2 Materials

Concrete for construction of drive approaches shall be a 6-sack mix design per Table 4.5. Depth of concrete shall be 6″, except for commercial driveways in which case the depth shall be 7″ reinforced minimum.

4.3 CONSTRUCTION REQUIREMENTS

4.3.1 GENERAL

(a) All concrete construction in the City right-of-way requires that a concrete permit be obtained from the office of the Director of Public Works prior to start of construction. Permits will only be issued to Contractor's possessing a valid concrete license from the Pueblo Regional Building Department. When curb and gutter construction is incidental to a site upon which a building permit has been issued, that Contractor who was issued the building permit may be issued a permit for curb and gutter at the discretion of the Director of Public Works.

(b) Provide ample notice (24-hour minimum) to the Engineer to allow for the examination of all forms and reinforcing before concrete is placed and to observe the placement of all concrete. Concrete may not be placed until approval has been given by the Engineer.

(c) All concrete construction within the City Right-of Way shall be inspected and approved by a City Inspector. Inspections are scheduled by calling (719) 553-2295 or online at www.pueblo.us/PLACE.

(d) This section provides for the operations and construction of concrete combination curbs and gutters, valley gutters, crosspans, driveway approaches, and sidewalks to be constructed within the City right-of-way except patterned concrete median.

(e) No concrete shall be placed adjacent to concrete that has taken its initial set unless the specified expansion joint is provided.

(f) No more concrete shall be poured in one day than can be finished before dark, the same day. No concrete that has begun to set shall be deposited in the forms.

(g) When concrete pavement, curb & gutter, crosspans, or sidewalk are removed, the removal shall be to an existing joint or to a sawed joint which is made prior to removal. See Section 4.3.6.4 Sawcutting for specific requirements.

(h) The final edge of asphalt removal for the 2′ cut back shall be along a straight edge line sawed to full depth, prior to removal of the pavement, unless otherwise approved by the City Engineer.

(i) The edges of the concrete or asphalt paving shall extend 1′ beyond the excavation. Where flowable fill is used as backfill, extension is not required.

(j) The final edge of asphalt removal for the 2′ cut back shall be cut along a straight line, in an approved manner, to allow removal without disturbing adjacent asphalt or concrete. When the adjacent asphalt or concrete has been disturbed by the removal process, the Permittee shall replace all disturbed asphalt or concrete as directed by the City Engineer.

4.3.2 EXCAVATION

4.3.2.1 General

Excavation will include excavation of all materials encountered. Excavation shall be made to subgrade elevations and to a width equal to the width of the concrete to be placed plus 2′ beyond the outer edges of the concrete to be placed or as directed by the Engineer.

If, after the excavation has been made to subgrade for the full width required, the top 6″ of the cut have a relative density of less than that required by Section 6.3.3 COMPACTION, it shall be reworked to obtain such density.

4.3.2.2 Excavation of Unsuitable Material

No excavation shall be made below the specified elevation except to remove soft or saturated soils, organic matter or other unsuitable material, as ordered by the Engineer. In the event the Contractor does excavate below the specified elevation, and said excavation was not directed by the Engineer, the excavated material shall be replaced with material satisfactory to the Engineer. The material shall be thoroughly compacted, at the contractors' expense.

Whenever excavation below the specified elevation to remove soft or saturated soils, organic matter, or other unsuitable material is ordered by the Engineer, the Contractor shall remove and replace the excavated material with material acceptable to the Engineer.

The replacement material shall be placed according to Section 6.3.3 COMPACTION.

4.3.6 PREPARATION FOR PLACEMENT

4.3.6.1 General

(a) Before placement, all equipment for mixing and transporting the concrete shall be cleaned, and all debris and ice shall be removed from the places to be occupied by the concrete. Forms shall be thoroughly oiled, and masonry filler units that will be in contact with concrete shall be water saturated (except in freezing weather). The reinforcement, placed according to Article 5 – REINFORCEMENT FOR STRUCTURAL CONCRETE, shall be free of ice, dirt, rust, mill scale, or other coatings.

(b) Water shall be removed from place of deposit before the concrete is placed unless otherwise permitted by the Engineer. All laitance and other unsound material shall be removed from hardened concrete before additional concrete is added.

(c) Preparation prior to concreting includes compacting, trimming, and moistening the subgrade, erecting the forms, and setting the reinforcing steel. A moist subgrade is especially important

in hot weather to prevent extraction of water from the concrete.

(d) Forms shall be clean, tight, adequately braced, and constructed of materials that will impart the desired texture to the finished concrete.

(e) Sawdust, nails, and other debris shall be removed before concrete is placed. Wood forms shall be oiled before placing concrete.

(f) When concrete placed on earth surfaces is necessary, the surfaces shall be free from frost, ice, mud and water.

4.3.6.2 Preparation of Subgrade

Where soils are encountered with an R-value less than 32, and a California Bearing Ratio (CBR) less than 15, the soils engineer will decide on the requirement for base course under concrete based upon recommendations contained in the soils report. Select base course materials and/or subgrade shall be compacted to not less than 95% of maximum dry density, in accordance with AASHTO T-99 (Standard Proctor) or 95% of the maximum dry density in accordance with AASHTO T-180 (Modified Proctor) and at the moisture content as specified in the soils or pavement design report. If the moisture content is not specified, the soil shall be compacted at +/-2%.

When the temperature of the surrounding atmosphere is 50° F or above, the sub grade and/or base course shall be lightly moistened immediately before the placement of the concrete. See ARTICLE 7 – EARTHWORK for additional requirements.

4.3.6.3 Removal of Obstructions

Whenever an existing driveway or entrance walk must be removed to provide space for forms, the Contractor shall remove those to the nearest joint, or as the Engineer may direct. A sawed joint shall be required for said removal. Replacement will be done on a unit price basis.

4.3.6.4 Sawcutting

(a) All concrete removal shall be to a sawcut joint unless it can be demonstrated that an existing joint is of such character that removal can be accomplished to a neat line.

(b) Sawcutting will be done to a depth equal to at least half the depth of the concrete.

(c) In no case will a piece of concrete be left which is closer than 5′ to the nearest control joint.

(d) All existing joints other than expansion joints shall be sawed prior to removal. A sawed joint will not be permitted within 5′ of an existing joint.

(e) Where water service line renewals cross existing concrete sections that have been previously saw-cut to less than 5′ minimum distance to a joint, these sections shall be removed and replaced to meet the 5′ minimum requirement to a joint.

(f) The final edge of asphalt removal for the 2′ cut back shall be cut along a straight line, in an approved manner, to allow removal without disturbing adjacent asphalt or concrete. When the adjacent asphalt or concrete has been disturbed by the removal process, the Permittee shall replace all disturbed asphalt or concrete as directed by the Engineer.

4.3.6.5 Removal of Tree Roots

Whenever a section of concrete is being replaced that has been uplifted by a tree root, the root shall be cut 12″ behind the concrete to prevent the damage from reoccurring. Any roots within 6″ of finished sub grade shall also be removed. If, in the opinion of the Engineer, cutting the root may seriously injure the tree, then the Engineer may order the removal of the tree. Except for City contracts with a tree removal bid item, the cost of the tree removal shall be at the adjacent property owner's expense. Prior to cutting the tree roots, the Engineer shall be consulted to determine the proper removal of the root and/or tree.

4.3.6.6 Placement on Hardened Concrete

When fresh concrete is placed on hardened concrete, certain precautions shall be taken to secure a well-bonded and watertight joint. The hardened concrete should be fairly level, reasonably rough, clean, and moist. Some coarse aggregate particles shall be exposed, and any laitance or soft mortar shall be removed from the top surface of the hardened concrete. For structures requiring more than one lift, the top of the lower course shall be broomed, just before it sets, with a steel or stiff fiber broom. The surface shall be level but heavily scored and free of laitance. It must then be protected and thoroughly cleaned just before the grout coat and top course are placed. Hardened concrete shall be moistened thoroughly before new concrete is placed on it. Where the surface has dried out it shall be saturated for 24 hours. No pools of water shall be left standing on the wet surface when the new concrete is placed.

4.3.6.7 Placement on Rock

Where concrete is to be placed on rock, all loose material should be removed and the rock should be thoroughly cleaned before concrete is placed. Concrete shall be placed to fill all irregularities in its surface.

When rock must be cut out, the surfaces in general should be vertical or horizontal rather than sloping.

4.3.7 FORMS

4.3.7.1 General

Forms shall be thoroughly cleaned of all dirt, mortar, and foreign matter before being used. Unit lengths of forms shall be jointed in advance of the time of placing concrete. Forms that are bent, twisted, warped, broken, or forms that have battered or splintered top faces shall be removed from the job. Repaired forms shall not be used until they have been inspected and approved by the Engineer. The top and face of a form shall not vary from a true plane by more than 1/4″ in 10′.

Wood forms shall not be less than 1/2" thick after being surfaced. Metal forms shall be approved section and shall have a flat surface on the top of not less than 1-3/4″. Steel stakes shall not be spaced more than 6′ apart. Clamps, spreaders, and braces shall be used where required to ensure rigidity in the forms.

The building of pedestals of earth or other materials upon which to rest the forms to bring them to the grade will not be permitted. Sufficient forms shall be provided so that they may remain in place 72 hours or more after the concrete has been placed before it is necessary to move and reuse them. Forms shall be cleaned and oiled before concrete is placed against them. The alignment and grade of forms shall be checked and approved immediately before placing the concrete.

Forms which show a variation exceeding 1/2" from the alignment shall be reset or removed as directed.

Forms for concrete shall be used for all vertical surfaces, mortar type, true to required lines and grades, and of sufficient strength to maintain shape during the placing of the concrete and the mechanical finishing without springing or settling.

4.3.7.2 Removal of Forms

Remove forms in such a manner as to ensure the complete safety of the concrete. Forms in general may be removed from vertical surfaces after 24 hours from the time of placing the concrete and 72 hours for horizontal surfaces (i.e. structural slabs). Additional time may be required as specified in Section 4.3.7.2 PROTECTION IN COLD AND FREEZING WEATHER when directed by the City Engineer. Any damages or injuries resulting from premature formwork removal are the sole responsibility of the Contractor. After the forms have been removed, no honeycomb or minor defects will be acceptable by the City Engineer, unless acceptable repairs are made.

4.3.8 JOINT SEALING

Sealing material shall be applied in strict accordance with the manufacturer’s directions. All expansion joints shall be sealed.

4.3.9 CONVEYING, PLACING AND FINISHING

4.3.9.1 Conveying

Each load shall be accompanied by a batch plant ticket with the following minimum information:

Supplier Name
Date
Truck Number
Project Name
Time Batched
Cubic Yards Batched
Type, and amount of cement
Design Mix Designation

Destination

Concrete shall be conveyed from the mixer to the place of final deposit by methods which will prevent the separation or loss of materials. The practice of moving concrete from one point to another using vibrators is expressly forbidden. Vibrators shall be used to consolidate the concrete, not to transport it.

Equipment for tramming, chuting, pumping, and pneumatically conveying concrete shall be of such size and design as to insure a practically continuous flow of concrete at the delivery end without separation of materials.

4.3.9.2 Placing

Concrete shall be placed, as practicable, in its final position to avoid separation due to rehandling or flowing and shall be placed at a rate that it maintains plasticity at all times. No concrete that has partially hardened or been contaminated by foreign materials shall be deposited on the job site nor shall retempered concrete be used. All concrete shall be thoroughly consolidated during placement. It shall be thoroughly worked around reinforcements and embedded fixtures and into the corners of forms.

Concrete shall not be free dropped from more than 4′.

Concrete shall be placed in horizontal layers of uniform thickness. The minimum layer thickness should be 4″ for flatwork and 6″ for walls and footings.

In depositing concrete against the forms, care shall be taken to work the fine portions of the aggregate surface to leave the surface in a uniform and smooth condition.

After placement in the forms, the concrete shall be thoroughly spaded or mechanically vibrated so that there will be no air spaces in the mass. The concrete shall be worked sufficiently to produce a dense mass.

Curb and gutter shall be brought to the proper surface by running a straightedge over the steel templates with a sawing motion, to fill all holes and depressions.

Crosspans shall be brought to the proper surface by wood floating to fill all holes and depressions.

Driveway approaches shall be brought to the proper surface by running a straightedge over the forms with a sawing motion to fill all holes and depressions.

Immediately after using the straightedge, the surface shall be floated with a wood float, trowel led with a steel trowel and edged with an approved edger. Finishing with a steel trowel shall be accomplished without adding water to the surface. Excessive water, laitance or other inert material shall be floated from the surface.

No more concrete shall be poured in one day than can be finished before dark the same day. No concrete that has begun to set shall be deposited in the forms.

4.3.9.3 Finishing

Just before the concrete takes its initial set, the surface shall first be troweled, then brushed with a soft bristle brush, except that pedestrian ramps shall be brushed with a coarse hair push broom, to remove all trowel marks and leave a uniform appearance.

Brushing shall be as follows:

(a) At right angles to the centerline of the sidewalk or curb line,
(b) parallel with the scoring for pedestrian ramps, or
(c) parallel to the center line of the crosspan.

4.3.9.4 Contractor Stamp

The contractor shall mark in every 50 linear feet of sidewalk and curb & gutter, and in every crosspan, valley gutter and driveway by stamping their name and the year of construction. The stamped letters shall be 1″ high and 1/4″ deep.

4.3.10 FIELD TESTING

The preparation, handling, storage, and testing procedures of all samples shall be in conformance with the applicable ASTM and AASHTO standards. Field testing may be done by either an independent testing firm, contracted by the City, or hired by the contractor/developer. The testing and frequencies listed in the table below shall be conducted to verify applicable standards and specifications are met.

Table 4.10. Minimum testing requirements

Standard	Requirement	ASTM
Compressive Strength	One set (5 cylinders) per 100 cubic yards and at least one set per day	C31 C39
Air Content	First three trucks each day, then one test per 50 cubic yards and at least one test per day	C231
Slump	First three trucks each day, then one test 50 cubic yards and at least one test per day	C143
Unit Weight	First three trucks each day, then one test per 300 cubic yards and at least one test per day	C1064

Failure of the concrete to pass any of the above tests may cause the rejection of the load and/or removal of concrete. The Contractor shall furnish the concrete for the tests at no expense to the City. Except for City projects, the expense of testing the concrete shall be paid by the contractor/developer. Privately funded projects within the City of Pueblo right-of-way shall be sampled and tested in accordance with the above table.

Additional cylinders or tests may be required at the direction of the Engineer. If additional tests are required, the financial burden will be borne by the contractor/developer if the testing results fail to meet minimum city specifications. If the testing results meet or exceed the city

specifications the additional testing costs will be paid for by the requesting entity.

Compressive strength tests shall consist of at least five cylinders cast and cured in accordance with ASTM C31. Unless otherwise directed by the Engineer, one cylinder shall be broken at the end of seven days, two cylinders shall be broken at the end of 28 days, and the remaining cylinders shall be stored until its disposition is determined by the Engineer. Testing must be accomplished by AC1 Field Testing Grade 1 certified technician.

The Engineer reserves the right to stop all future concrete work, when the 7- or 28-day tests indicate unsatisfactory results, until in the opinion of the Engineer proper corrective measures have been taken to ensure quality concrete in future work or all corrections deemed necessary have been made.

If the 28-day compressive strength tests produce results less than the specified required minimum compressive strength, then any concrete represented by those tests shall be removed and replaced at the Contractor's expense. In lieu of removal, the Contractor has the option of having additional strength tests taken by an approved laboratory at the Contractor’s expense to satisfy the Engineer that the concrete in question has achieved the required strength. The location, number and type of tests shall be subject to review by the Engineer prior to start of testing.

4.3.11 CURING AND PROTECTING

All concrete shall be cured for a period of seven days or until the concrete has reached 80% of the design compressive strength. Concrete shall be kept moist for at least five days after placement. The curing medium used shall be applied to prevent checking and cracking of the finished surface of the concrete immediately after the finishing operation is completed, and it shall be maintained to prevent loss of water from the surface and edges of the concrete for the entire duration of the curing period.

4.3.11.1 Curing Compounds

If curing compounds are used, they shall be thoroughly agitated during use and shall be uniformly sprayed in a single coat. Application shall be on all concrete surfaces at a rate not to exceed 150 square feet per gallon in place. Application shall be made as soon as all surface water sheen has disappeared from the concrete surface. If concrete surfaces become partially dry, they shall be thoroughly moistened with water immediately prior to the application of the compound. If in the opinion of the Engineer pinholes exist, a second coat shall be immediately applied at right angles to the first in the affected area. Under no circumstances shall curing compound be used on surfaces to which new concrete is to be bonded. All curing compounds shall conform to ASTM C-309.

If, at any time during the curing period any of the forms are removed, a coat of curing compound shall be applied immediately to the exposed surface.

4.3.11.2 Protection in Cold and Freezing Weather

Cold weather is defined as a period when, for more than three consecutive days, the following conditions exists:

(a) The average air temperature is less than 35˚F, and

(b) The air temperature is not greater than 45˚F for more than one half of any 24-hour period.

The Contractor is responsible for the strength and quality of the concrete placed during cold weather. Before starting paving operations, the Contractor shall be prepared to protect the concrete from freezing.

The placing of concrete will be permitted only when the temperature of the concrete placed is between 55˚F and 90˚F. Cold weather concrete placement shall follow the requirements and recommendations of the American Concrete Institute (ACI) 306R-10 (or the most current revision).

Concrete may be placed when the air temperature in the shade is 40˚F and rising. No concrete shall be placed regardless of the present temperature, when the National Weather Service forecast predict weather to be below 32˚F before final set of the concrete unless special means of heating and protection are used. Protection against freezing is the Contractor's responsibility regardless of the weather forecast or climatic conditions at the time of placing.
The Contractor shall protect the concrete from falling below 55˚F surface temperature until the concrete has developed a compressive strength of at least 3,500 psi or 80% of the required 28-day concrete design strength.

If concrete placement is performed when the temperatures are below or are projected to fall below 15°F for more than 24 hours, the Contractor shall measure the internal temperature of the concrete at regular intervals during the curing using automated sensors provided by the Contractor. Data obtained shall be provided to City Engineering Division. The Contractor shall be responsible for the placement, protection, and maintenance of all measuring devices. Locations where measuring devices are installed shall be protected in the same manner as the rest of the concrete.

The following procedures shall be followed if the temperature of the concrete falls below 32°F before the concrete reaches 3,500 psi or 80% of the required 28-day concrete design strength:

(a) The Contractor will take cores at locations designated by the Engineer.

(b) The Engineer will take immediate possession of the cores and submit the cores to a petrographer for examination in accordance with ASTM C856.

(c) All costs associated with coring, transmittal of cores, and petrographic examination shall be borne by the Contractor regardless of the outcome of the petrographic examination.

(d) Pavement damaged by frost as determined by the petrographic examination, shall be removed and replaced at the Contractor's expense.

Under no circumstances shall the placement of concrete be permitted, regardless of temperature conditions, if the supporting ground is frozen or contains frost. Use of salt or other additives to prevent concrete from freezing is not permitted. Concrete that has been frozen will

be completely removed and replaced as directed by, and to the satisfaction of, the City Engineering Division. Additional field testing may be directed by the City Engineering Division per Section 4.3.6 of this document.

4.3.11.3 Hot Weather Placement

When the air temperatures are expected to exceed 100˚F, the Contractor shall obtain approval from the Engineer on the procedures to be used in protecting, depositing, finishing and curing of concrete. A concrete retarding agent may be used upon approval of the Engineer. The use of fog sprays is prohibited. The time allowed for hauling and placement shall be reduced to 60 minutes. Concrete shall not be placed when the temperature of the mix exceeds 90˚F. Any concrete placed when the ambient temperature is 100˚F or greater will be at the contractor's risk, regardless of any prior verbal authorization.

4.3.12 PATCHING

Patch all voids, tie holes, honeycombs, or damaged areas. Cut or chip out large defective areas a minimum of 1 ½″ deep or 1 ½″ below the reinforcement, if present, until sound and clean concrete is exposed, and patch as required. Add white cement to patching grout as required to match color of existing concrete where patches are exposed to view.

When allowed by the Engineer, spalls in curb and gutter or sidewalk shall be patched with a product from the CDOT approved list for the appropriate application. Grout color shall match that of concrete being patched. Contractor shall submit Material Data Sheets for City review prior to application.

4.3.13 TRENCH BACKFILL WITH CLSM

Except as otherwise provided or approved by the City, after the pipe or conduit is laid, trenches shall be backfilled with CLSM 24" below the asphalt. The Utility Owner shall dictate any variance to these CLSM separation distances. Where depths of Flashfill exceed 3′ over wastewater mains please contact Pueblo Wastewater or Stormwater Departments for bedding depths.

CLSM should be well mixed and discharged directly from the truck into the space to be filled, or by other methods approved by the City. When used as backfill in the pipe zone, care should be taken to prevent flotation or misalignment of the pipe by means of straps, soil anchors or other approved means of restraint. Material may be placed in stages with initially lesser flowability, to prevent movement or flotation of pipe. CLSM shall not be placed when the trench bottom or walls are frozen or contain frozen materials.

Compaction of CLSM shall not be performed.

The maximum layer thickness for Flow-Fill shall be determined by the Contractor. Additional layers shall not be placed until the backfill has lost sufficient moisture to be walked on without indenting more than 2″. Allow bleed water to rise and divert away from placement area before another layer may be added. Do not place CLSM on top of bleed water or on any water above the bearing layer. Any damage resulting from placing Flow-Fill in layers that are too thick or from not allowing sufficient strength gain time between placement of layers shall be repaired at the

CONTRACTOR's expense.

The maximum layer thickness for Flashfill is not restricted except to prevent flowing or running into undesired areas.

Contractor shall observe all other Construction Requirements as provided in CDOT Section 206 for placement of CLSM.

4.3.14 STREET SURFACING AND PATCHING

Placement of pavement materials for vehicle traffic shall not be allowed until the removable CLSM backfill has cured 24 hours (Flow-Fill only) or achieved sufficient resistance to allow paving. CLSM (either type) should be subjected to standard proof roll criteria, or penetration resistance tests. CLSM should achieve a penetration resistance of at least 3.6 tsf (tons per square foot) (equivalent to 50 psi) using a hand-held soil penetrometer, typically pushed to 1/4″ depth, in accordance with the penetrometer manufacturer's instructions. Alternately, penetration resistance shall be considered achieved when a person weighing 100 pounds by use of their body weight as an axial load, cannot penetrate the CLSM backfill with the square cut end of a 1/2″ diameter (#4) steel reinforcing bar.

4.3.15 TOLERANCES

Finished horizontal concrete surfaces shall not vary from a true plane by more than 3/16″ in 10′ and the upstanding face shall not vary from a true plane by more than 1/4″ in 1′. Any concrete not adhering to these tolerances may be rejected by the City and shall be replaced by the Contractor's at expense.

4.3.16 EMBANKMENTS

Embankments shall be constructed of suitable excavated, borrow or select materials approved by the Engineer, placed in successive layers no greater than 6″ in thickness, parallel to the finished subgrade. Each layer of embankment placed shall contain the amount of moisture necessary to obtain a minimum density outlined in Section 6.3.3 COMPACTION, when thoroughly compacted with the proper equipment.

In fill sections the material shall be placed for the full width of the concrete to be placed plus 2′ beyond the outer edges of the concrete to be placed and shall slope to the existing ground on a 2:1 slope.

4.3.17 POST CONSTRUCTION

4.3.17.1 Backfilling After Construction

In fill sections, a 2′ minimum wide berm shall be constructed against the back of the curb or sidewalk if applicable and sloped to the existing ground at a 2:1 slope, unless shown otherwise on the drawings.

In cut sections, a level bench shall extend from the back of the curb a distance of 7′ before the cut slope extending to daylight, or as shown on the drawings. The void behind the back of the

curb and gutter shall be backfilled after the removal of the back form and the concrete has attained a minimum strength of 3,000 psi. Care should be exercised during this operation so that the alignment or grade of the sections shall not be disturbed. Any that are shifted, cracked, or in any way damaged, shall be removed and replaced at the Contractors own expense.

4.3.17.2 Asphalt Patch

Where asphalt and base have been removed for the gutter face form, the patch shall have a minimum width of 2′ when a cut back is required. The patch shall be constructed using asphalt conforming to the requirements of ARTICLE 8 – PAVEMENT and having an asphalt thickness equal to that of the adjacent street except that a minimum thickness of 6″ shall be maintained.

4.3.17.3 Site Restoration

Restoration of the area behind the new concrete shall include, but not be limited to replacing sod, shrubs, gravel, asphalt, concrete, irrigation components, and other landscaping items. Restoration is considered subsidiary to the concrete construction and shall not be paid as a separate item, unless noted otherwise in the Special Provisions.

4.3.18 SPECIFIC CONSTRUCTION TYPES

4.3.18.1 Curbs and Gutters Construction

(a) General. No concrete shall be placed if there is not enough to completely fill one complete 5′ curb and gutter section. No concrete shall be deposited adjacent to concrete that has already taken its initial set (90 minutes or older), unless the specified expansion joint is provided.

(b) Expansion Joints. Expansion joints of 1/2″ wide shall be constructed in curbs and gutters at 100′ intervals, at each side of structures, and at the ends of all curb returns; except that expansion joints shall not be installed within 20 feet of an island nose. Expansion joints shall be filled with joint filler strips 1/2″ thick conforming to 4.2.1.8 Expansion Joint requirements. The filler for the joint shall be furnished in a single piece for the full depth and width required for the joint. Filler strips shall be secured to forms or subgrade to avoid displacement while or after concrete is placed; or attached to a bulkhead. Expansion joint filler shall be shaped to the cross section of the curb and gutter. Expansion joints shall be constructed at right angles to the line of curb and gutter.

(c) Contraction Joints. Contraction joints shall be installed every 10′ and shall be inserted by a 1/8″ thick steel template at right angles to the curb and 1-1/2″ deep into the concrete.

(d) Forms. All forms shall have dimensions of the City of Pueblo specified curb and gutter sections. Flexible, curbed, or wood forms of the proper radii shall be used for curbs having a radius of less than 200′.

(e) Finished Work. The work shall be performed in a manner which results in a curb and gutter constructed to a specified line and grade, uniform in appearance and structurally sound. Curbs found with unsightly bulges, ridges, low spots in the gutter or other

defects shall be removed and replaced at the Contractor's expense. When checked with a 10′ straightedge, grade shall not deviate more than 1/4″ inch and alignment shall not vary more than 3/8″.

(f) Backfill. Immediately after the curb and gutter have been properly cured, backfill shall be placed and compacted against the back of the curb to the satisfaction of the Engineer, to prevent any movement of the curb and/or gutter during the placing of the street pavement. Placement of asphalt paving shall be no sooner than three days after placing of concrete except when threat of erosive rains exists.

4.3.18.2 Sidewalk and Curb Ramps Construction

(a) Expansion Joints. Transverse expansion joints 1/2″ wide shall be constructed at all sidewalk returns and in-line with expansion joints in the adjacent curb. Where the curb is not adjacent, expansion joints shall be constructed at intervals of 100′. Expansion joints shall coincide with curb and gutter control joints. Expansion joints shall have joint filler strips placed between or within pours. The filler shall be 1/2″ thick conforming to 4.2.1.8 Expansion Joint requirements. The filler for the joint shall be furnished in a single piece for the full depth and width required for the joint unless otherwise authorized by the AGENCY. The joint filler shall be placed with the top edge 1/4″ below the concrete surface and shall be held in place by means of steel pins driven into the subgrade and spaced sufficiently close to prevent warping of the filler during floating. Upon completion of floating, the pins shall be removed and when finishing operations have been completed, the joint shall be edged with an edging tool having a radius of 1/8″.

(b) Contraction Joints. Contraction joints shall be installed every 5′ and shall be at least 1-1/2″ deep into the concrete.

(c) Tolerance. The top face of the slab shall not vary from the true grade and alignment by more than 1/4″ in 10′ when checked with a straightedge. Slope of the grass portion of the parkway shall be 1/4" to 1-1/2″ per foot above the top of curb. Slope of sidewalk shall be maximum 2% cross slope (1:50). Curb ramps shall have a maximum running slope of 8.33%. The counter slope of the gutter or street at the foot of the ramp run shall be 5% maximum. The maximum difference in grades between the curb ramp and the adjacent gutter pan shall be 13.3%. The transition between the two surfaces shall be flush.

(1) Where applicable, turning spaces shall be provided with the curb ramps and shall have a maximum slope of 2% in all directions (1:50). The counter slope of the gutter or street at the turning space shall be 5% maximum. The maximum difference in grades between the turning space and the adjacent gutter pan shall 13.3%. The transition between the two surfaces shall be flush.

(2) Detectable warnings (Tactile band) shall extend a minimum of 2′ in the direction of pedestrian travel and extend the entire width of the curb ramp. Detectable warnings shall be cast iron castings containing truncated domes. Castings shall comply will all provisions of the Americans with Disabilities Act Accessibility Guidelines (ADAAG) and the Public Rights-of-Way Accessibility Guidelines (PROWAG) with Supplements.

a. Castings shall be cast-in-place truncated dome tactile system, Neenah R-4984, East Jordan Iron Works 700571 (4′ ramp), 700721 (5′ ramp), or approved equal, at the sizes denoted on the plans. Radial castings shall be East Jordan Iron Works 700621 (20′ radius), 700625 (25′ radius), 700631 (30′ radius) or approved equal, at the sizes denoted on the plans.

b. Finish shall be Natural Patina or Colonial Red (FED 20109).

(3) Sidewalk, curb ramps, and portions of the curb that are determined to be out of the acceptable tolerances shall be removed and replaced by the Contractor at no additional cost to the City.

4.3.18.3 Crosspans

Expansion Joints. Expansion joints shall be placed completely through the section at 50′ intervals and at curb returns. One-inch (1”) smooth steel dowels with sleeves or caps at 2′ centers shall be placed in the joint.

4.3.18.4 Driveway Approaches

(a) Expansion Joints. Expansion joints shall be placed between drive approaches and either existing sidewalk or the driveway beyond the property line.
(b) Contraction Joints. Contraction joints shall be installed every 10′ and shall be insertion of a 1/8″ thick steel template at right angles to the curb and 1-1/2″ deep into the concrete.

4.4 METHOD OF MEASUREMENT

4.4.1 CURB AND GUTTER

Curb and gutter to be measured in linear feet.

4.4.2 SIDEWALK AND CURB RAMPS

All sidewalk and pedestrian ramps shall be measured in square feet.

4.4.3 CROSSPANS

Crosspans shall be measured in square feet.

4.4.4 DRIVEWAY APPROACHES

Driveway approaches shall be measured in square feet.

4.5 PAYMENT

4.5.1 CURB AND GUTTER

Shall be paid for at the contract unit price, per linear foot, for the actual length of authorized curb and gutter constructed. This item includes all materials such as concrete, forming and form removal, finishing and curing of concrete, grading, compaction, and any other work items required by the plans and specifications.

4.5.2 SIDEWALK AND CURB RAMPS

Payment will be based on the number of square feet constructed in place at the contract unit price per square foot, unless otherwise noted in the bid proposal.

4.5.3 CROSSPANS

Crosspans shall be paid for at the contract unit price for each unit installed by project end. Each gutter apron with a monolithic curb radius shall be paid for separately. This item includes forming and form removal, purchase and placement of concrete, finishing and curing of concrete, grading, compaction, and any other work items required by the plans and specifications.

4.5.4 DRIVEWAY APPROACHES

Driveway Approaches shall be paid for at the contract unit price for each unit installed by project end. This item includes forming and form removal, purchase and placement of concrete, finishing and curing of concrete, grading, compaction, and any other work items required by the plans and specifications.

ARTICLE 5

REINFORCEMENT FOR STRUCTURAL CONCRETE

5.1 GENERAL

5.1.1 DESCRIPTION

The work under this section includes the furnishing of all labor and materials necessary for the construction (placement) of the reinforcement for structural concrete according to the plans and these specifications. Structural concrete shall be defined as mass concrete with reinforcement exceeding 0.3% of the concrete cross-sectional area.

5.2 MATERIALS

5.2.1 SUBMITTALS

(a) Engineered shop drawings and schedules shall require original Colorado engineer's or architect's stamp, for all reinforcement.

(b) The submittals shall be made in ample time to be reviewed, and to permit corrected drawings to be delivered to the Engineer a minimum of seven days prior to work.

(c) These drawings shall show the size, number, exact position and spacing of reinforcement and the exact location of all openings, framing, or special conditions affecting the work.

(d) Detailing of reinforcement shall conform to ACI 315.

5.2.2 REINFORCEMENT

The reinforcing bars shall be in conformity with ASTM A-615 SI Grade 40 and Grade 60 and the general notes on the structural drawings. Dowels, conforming to the requirements of ASTM A-15, shall be intermediate grade plain bars rolled from billet stock. Glass Fiber Reinforced Polymer (GFRP) and Carbon Fiber Reinforced Polymer (CFRP) reinforcing bars may be used with prior approval of the Engineer.

(a) Welded Wire Fabric shall not be permitted for use with structures within the City right-of-way.

(b) Fiber-Reinforced Concrete shall not be permitted for use with structures within the City right-of-way.

(c) Reinforcing Bars, #3 to #18, shall conform to AASHTO M31 Grade 60 (ties and stirrups may be Grade 40). Epoxy coated reinforcing shall conform to AASHTO M284.

(d) The usage of GFRP and CFRP shall conform to ACI 440.1R-06 *Guide for the Design and Construction of Structural Concrete Reinforced with FRP Bars (or most current version)*. Do not use CFRP reinforcing bars in contact with steel reinforcing, metal lifting devices or other embedded metal items. Use the nominal diameters, nominal cross-sectional areas, and the

mechanical properties of Fiber Reinforced Polymer (FRP) reinforcing bars in accordance with CDOT Specifications for the design of structural concrete.

5.2.3 CLEANING

Reinforcement, prior to placement of concrete, shall be free from rust, scale, oil, ice, or other coatings that will destroy or reduce the bond, including mortar from previous concrete pours.

5.2.4 MATERIALS FOR ACCESSORIES

Where the concrete surface will be exposed to the weather in the finished structure, the portions of all accessories in contact with the formwork shall be galvanized or shall be made of plastic. Where the concrete surface will be exposed to plant water, all accessories in contact with formwork shall be stainless steel or plastic.

5.2.5 EXPANSION DOWELS

Smooth steel dowels conforming to AASHTO M183 with gage metal or PVC sleeves. Size, number and spacing as noted on the drawings.

5.2.6 CONCRETE

Conform to the requirements of *ARTICLE 4 - CONCRETE*. Calcium chloride shall not be used in reinforced concrete.

5.3 CONSTRUCTION REQUIREMENTS

5.3.1 GENERAL

See *Article 4 – CONCRETE* for construction requirements for the concrete portion of structural concrete.

5.3.2 REBAR PREPARATION

5.3.2.1 Tie Bars, Bar Supports and Wire Ties

Place reinforcement to maintain minimum coverage as indicated for concrete protection. Arrange, space, and securely tie bars and bar supports to hold reinforcement in position during concrete placement operations. Set wire ties so ends are directed into concrete, not toward exposed concrete surfaces.

5.3.2.2 Bending

Reinforcement shall be bent cold. **The use of heat in bending bars shall not be permitted.** Bars shall be full length required and accurately bent to details. All bent bars shall be manufactured in accordance with the recommendations of the Concrete Reinforcing Steel Institute (CSRI). No bars partially embedded in concrete shall be field bent except as shown on the drawings or specifically permitted by the Engineer.

5.3.2.3 Placing

For details and reinforcement placement and supports comply with Concrete Reinforcing Steel Institute's (CRSI's) recommended practice for "Placing Reinforcing Bars," for details and reinforcement placement and supports, and as specified. Reinforcement shall be accurately located in forms and firmly held in place before and during the depositing of concrete by means of metallic supports, metal chairs, spacer bars, tie wire or other devices adequate to ensure against displacement during construction.

Exposed reinforcing bars intended for bonding with future extensions shall be protected from corrosion by adequate covering.

5.3.2.4 Preventing Displacement

All reinforcing bars shall be positioned, supported, secured and wired together to prevent displacement by construction loads or the placing of concrete. On the ground, and where necessary, supporting concrete blocks shall be used. Over formwork, bar chairs, metal chairs, runners, bolsters, spacers, and hangers shall be furnished, as approved by the Engineer.

5.3.2.5 Offsetting Bars

Vertical bars in columns shall be offset to permit the bars to be adjacent and in contact at all splices.

5.3.2.6 Splicing

Wherever it is necessary to splice reinforcement other than as shown on the drawings, the character of the splice shall be approved by the Engineer on the basis of allowable bond stress in the reinforcement at the splice. Splicing shall not be made at points of maximum stress nor shall adjacent bars be spliced at the same point. Laps in tension splices shall be 36-bar diameters or 30bar diameters in compression, or as specified.

5.3.2.7 Cover

The minimum clear cover for reinforcing steel shall be as specified in ACI 301, Section 5.5, and as shown below, unless otherwise shown on the plans.

Table 5.1. Minimum clear cover

Location	Minimum Cover
Bottom bars on soil bearing foundation and slabs	3″
Bars adjacent to surfaces exposed to weather on earth backfill:	
Bars more than 3/4″ diameter	2″
Bars 3/4″ or less in diameter	1-1/2″
Interior Surfaces: Slabs, walls, joints with 1-3/8″ diameter or smaller bars	3/4″

5.4 METHOD OF MEASUREMENT

The contract quantities to be paid for under this item shall be according to *Article 4 – CONCRETE Section 4.4 METHOD OF MEASUREMENT.*

5.5 BASIS OF PAYMENT

The basis of payment shall be according to *Article 4 – CONCRETE Section 4.5 BASIS OF PAYMENT.*

ARTICLE 6

AGGREGATE BASE COURSE

6.1 GENERAL

6.1.1 DESCRIPTION

The work under this article shall consist of furnishing, placing and compacting one or more courses of base or sub-base material to provide a firm foundation for subsequent construction. Aggregate base course shall conform with the lines, grades, and cross-sections shown on the plans and shall comply with these specifications.

6.1.2 SUBMITTALS

Aggregate Base Course submittals outlined below are required on all City contracts and any other project within the public right-of-way. All aggregate suppliers furnishing aggregate for placement within any City right-of-way shall furnish to the City once every two years, aggregate gradation analysis for aggregate intended to be used for placement within the right-of-way.

6.2 MATERIAL

6.2.1 BASE AND SUB-BASE MATERIALS

The aggregate for base or sub-base material shall be composed of crushed stone, crushed gravel, or natural gravel which conforms to the quality requirements of AASHTO M 147 (latest revision).

The use of recycled asphalt product (RAP), recycled concrete (RC) not blended or mixed other material, or Fly-Ash blended with Class 6 aggregate base, may not be used unless approved by the City Engineer. At least 50% by weight of the material retained on the No. 4 sieve, and larger, shall have at least one fractured face. This material shall also conform to the following gradation requirements.

Table 6.1. Gradation requirements (Percent Passing Sieve Sizes by weight)

Sieve Size	Sub-base	Base Course	
	Class 1	Class 5	Class 6
4”	-	-	-
3”	-	-	-
2 ½”	100%	-	-
2”	95-100%	-	-
1 ½”	-	100%	-
1”	-	95-100%	-
¾”	-	-	100%
No. 4	30-65%	30-70%	30-65%
No. 8	-	-	25-55%

No. 200 (AASHTO T-11)	3-15%	3-15%	3-12%
Liquid Limit (AASHTO T-89)	35 MAX	30 MAX	30 MAX
Plasticity Index (AASHTO T-90)	6 MAX	6 MAX	6 MAX

The aggregate shall have a Los Angeles Abrasion Test (AASHTO T-96) percentage of wear not exceeding 45% (excluding Class 1). Class 1 material shall have a minimum R value of 69, or a minimum CBR of 40 when tested in accordance with AASHTO T-190 or T-193, respectively. Class 5 & 6 material shall have a minimum R value of 77, or a minimum CBR of 60.

6.2.2 CLASS 1 STRUCTURE BACKFILL

Class 1 structure backfill shall meet the following gradation requirements:

Sieve Size	Mass Percent Passing Square Mesh Sieves
50 mm (2 inch)	100
4.75 mm (No. 4)	30-100
300 µm (No. 50)	10-60
75 µm (No. 200)	5-20

In addition, this material shall have a liquid limit not exceeding 35 and a plasticity index of not over six when determined in conformity with AASHTO T 89 and T 90 respectively.

6.2.3 CLASS 2 STRUCTURE BACKFILL

Class 2 structure backfill shall be composed of suitable materials developed on the project. To be suitable for use under this classification, backfill shall be free of frozen lumps, wood, or other organic material. If the material contains rock fragments that, in the opinion of the Engineer, will be injurious to the structure, the native material shall not be used for backfilling and the Contractor shall furnish Class 1 structure backfill material at the contract unit price. If contract unit price does not exist for Class 1 structure backfill, it will be paid for in accordance with subsection 104.03.

6.2.4 CLASS 3 STRUCTURE BACKFILL

Class 3 structure backfill or squeegee shall be a sandy gravel and meet the following gradation:

Sieve Size	Mass Percent Passing Square Mesh Sieves
9.5 mm (3/8 inch)	90-100
4.75 mm (No. 4)	45-80
0.075 mm (No. 200)	5-12

6.3 CONSTRUCTION REQUIREMENTS

6.3.1 SUBGRADE PREPARATION

Care shall be exercised in the hauling and placing of base/subgrade course materials to avoid segregation of the coarse and fine aggregates and to avoid contamination of the base/subgrade course materials with undesirable materials. Any ruts, holes, defects or soft yielding areas which occur in the subgrade for any cause shall be corrected and compacted to the required density and stability before an aggregate base course is placed. These repairs shall be made at the expense of the contractor. Subsequent base course layers shall be placed within 24 hours of the approval of the subgrade or moisture and density shall be reconfirmed at the expense of the Contractor.

6.3.2 PLACING AND MOISTURE CONDITIONING

The aggregate shall be uniformly deposited on the approved subgrade by means of the hauling vehicle with or without spreading devices. Aggregate shall be distributed over the surface to the depth specified on the plans or as established by the City Engineer. The maximum loose lift thickness shall be no more than 8”.

Care shall be exercised in the hauling and placing of the course materials to avoid segregation of the coarse and fine aggregates and to avoid contamination of the course materials with undesirable materials.

After the base course materials have been deposited, the course shall be thoroughly blade-mixed to the full depth of the layer by alternately blading the entire layer to the center and back to the edges of the road. It shall then be spread and finished to the required cross section by means of a self-propelled tired motor grader.

Water shall be applied prior to and during all blading and processing operations to moisten the material sufficiently to prevent segregation of the fine and coarse particles. Water shall be applied during the compaction in sufficient amounts to assist in compaction and prevent raveling.

The contractor shall be responsible for ensuring that their hauling operations do not cause excessive track out of dirt/mud onto paved streets adjacent to the work zone. All tracked out materials shall be promptly removed by the contractor at their sole expense. At a minimum, a sweeper operation shall be performed daily.

6.3.3 COMPACTION

Compaction shall immediately follow the spreading operation. If the compacted depth of the course exceeds 6”, the course shall be constructed in two or more layers of approximately equal thickness. The maximum compacted thickness of any one layer shall not exceed 6”.

Each layer shall be compacted to a density of not less than 95% of the maximum density in accordance with AASHTO T-180. Field, in-place density tests will be in accordance with Table 6.2. The finished surface of each layer shall have a uniform texture. Water shall be

uniformly applied over the materials during compaction in the quantity necessary for compaction. Moisture conditions shall be within 1% of optimum moisture content. It is to be expected that a loss of density in the upper portions of the material may occur due to a lapse in time, elements, or other reasons. Moisture conditioning and recompaction to the specified density will be required prior to placement of any subsequent layer and no additional compensation will be allowed for such work. Testing shall be completed within 24 hours of the placement of the next course. Base shall be retested if the next course is delayed beyond 24 hours or if exposed to precipitation.

6.3.4 PROOF ROLL

Prior to placing any base material, the subgrade shall be proof rolled in accordance with ARTICLE 7 – EARTHWORK Section 7.3.15.1. Any unsuitable areas shall be corrected to the satisfaction of the City Engineer.

Prior to placing any pavement, the base shall be proof rolled. Any unsuitable areas shall be corrected to the satisfaction of the City Engineer with density testing provided by the contractor. Following placement of material, if environmental conditions warrant, the material shall be retested for moisture/density and proof rolling at the contractor's expense.

6.3.5 SURFACE AND THICKNESS TOLERANCES

The surface of the prepared base course material shall be free from depressions exceeding 1/4″ in 10′ when measured with a straight edge. Spot checks should not vary more than 1/2″ up or down from the calculated elevation (plan grade). The surface of the base of the sub-base course shall be smooth and true to the established crown, grade and thickness. Any areas not within these tolerances shall be reworked until compliance is achieved. The required compacted thickness shall be as specified on the construction drawings.

6.3.6 QUALITY CONTROL

All samples and tests described herein shall be made in accordance with approved ASTM/AASHTO procedures. The owner/developer shall provide for all testing laboratory services in connection with tests verifying conformance of proposed materials with project requirements. The owner/developer shall also provide for testing laboratory services in connection with tests on materials after incorporation into the project.

Additional tests may be required at the direction of the Engineer. If additional tests are required, the financial burden will be borne by the contractor/developer if the testing results fail to meet minimum city specifications. If the testing results meet or exceed the City specifications the additional testing costs will be paid for by the requesting entity.

Prior to installation of base or sub-base course materials, the owner/developer shall provide the City Engineer with a copy of the R-value test results, gradation analysis, Atterberg Limits (Liquid Limit /Plasticity Index), and moisture/density curve for the proposed base or sub-base course materials. Laboratory testing should be completed on samples taken from the plant site or proposed borrow.

Testing should be completed per the below schedule of testing. If, in the opinion of the City Engineer, the material being used on the jobsite is not at any time in conformance with approved laboratory mix designs or test reports, conformance tests shall be run. If this material does not meet the specifications, testing shall be paid for and the problem remedied at the expense of the Contractor.

During placement of aggregate base and/or sub-base, testing shall be completed on a regular basis to verify specification compliance. Required laboratory testing shall be completed on samples secured from the jobsite.

Table 6.2. Schedule of testing

Testing	Frequency
Gradation Analysis	1/Project Site or material change
Atterberg Limits (LL & PI)	1/Project Site or material change
Moisture/Density Curve	1/Project Site or material change
In-place density tests (AASHTO T-191, 205, 238) Includes thickness measurement	1/200 L.F. per lane

6.4 METHOD OF MEASUREMENT

Aggregate base course construction described herein will be measured as a separate pay item. Measurement shall be by the ton as evidenced by weight tickets for each truckload or fraction thereof.

6.5 BASIS OF PAYMENT

Base course material, when directed by the City Engineer, used as replacement for unsuitable material will be paid as “Subgrade Stabilization” and shall include all costs associated with the excavation, removal and disposal of unsuitable materials and all costs associated with furnishing, placing and compacting the aggregate base material. This payment shall be full compensation for all materials, tools, equipment, and labor necessary to complete the work under this section in accordance with the plans and specifications.

{This Page Intentionally Left Blank}

ARTICLE 7

EARTHWORK

7.1 GENERAL

7.1.1 DESCRIPTION

The work to be performed under this section of the specifications shall consist of the excavation and disposal of all materials taken within the limits of work: construction of embankments, shaping and compaction of street sections, and other sections within the public rights-of-way and public easements as necessary to prepare the subgrade for subsequent construction, as specified herein, and as directed by the Engineer.

7.2 MATERIALS

7.2.1 EMBANKMENT MATERIALS

Embankment material shall consist of earth, sand, or gravel. Embankment materials shall be free from organic matter, frozen soil, ice, snow, mud or other deleterious material. All fill material shall be approved by the Engineer prior to placement.

7.3 CONSTRUCTION REQUIREMENTS

7.3.1 PERMITS

(a) Any excavation within the public right-of-way, including new subdivisions, shall require an excavation permit. This permit shall be obtained from the City of Pueblo Public Works Department office or online at www.pueblo.us/PLACE. Permit fees shall be in accordance with the latest fee schedule, adopted by the City Council. Permits will only be issued to Contractors licensed under the Provisions of Chapter 4, Title XII, of the Code of Ordinances to do excavation work, and who post bonding and insurance certificates as required by sections 12-6-10 and 12-6-11 of the Code of Ordinances. Permits ("no fee") may be issues for publicly funded projects, state funded projects and/or the Board of Water Works and school districts; however, contractors working for either agency are not exempted from the permit fees.

(b) If the work involves removal and replacement of existing concrete features (curb & gutter, sidewalk, crosspan, etc.), then a concrete permit must be obtained from the City of Pueblo Public Works Department office. Permits will only be issued to licensed concrete contractors.

(c) Where pavement removal is associated with an excavation permit, the applicant shall pay all Pavement Impact Fees as required by Section 12-6-4.1 Pavement Impact Fee of the Pueblo Municipal Code of Ordinances, unless otherwise waived by the Director of Public Works.

7.3.2 GENERAL EXCAVATION

Perform excavation of every type of material encountered within the limits of the project to the lines, grades, and elevations indicated and as specified. Perform the grading in accordance with the typical sections shown and the tolerances specified in paragraph 7.3.17 FINISHING. Transport satisfactory excavated materials and place in fill or embankment within the limits of the work. Excavate unsatisfactory materials encountered within the limits of the work below grade and replace with satisfactory materials as directed. Include such excavated material and the satisfactory material ordered as replacement in excavation. Dispose surplus satisfactory excavated material not required for fill and unsatisfactory excavated material as specified in paragraph 7.3.5 DISPOSAL OF MATERIAL. During construction, perform excavation and fill in a manner and sequence that will provide proper drainage at all times.

7.3.2.1 Ditches, Gutters, and Channel Changes

Finish excavation of ditches, gutters, and channel changes by cutting accurately to the cross sections, grades, and elevations shown on Construction Drawings. Do not excavate ditches and gutters below grades shown. Backfill the excessive open ditch or gutter excavation with satisfactory, thoroughly compacted material or with suitable stone or cobble to grades shown. Dispose excavated material as shown or as directed, and in no case allow material to be deposited within 4′ from the edge of a ditch. Maintain excavations free of detrimental quantities of leaves, brush, sticks, trash, and other debris until final acceptance of the work.

7.3.2.2 Drainage Structures

Make excavations to the lines, grades, and elevations shown, or as directed. Provide trenches and foundation pits of sufficient size to permit the placement and removal of forms for the full length and width of structure footings and foundations as shown. Clean rock or other hard foundation material of loose debris and cut to a firm, level, stepped, or serrated surface. Remove loose, disintegrated rock and thin strata. Do not disturb the bottom of the excavation when concrete or masonry is to be placed in an excavated area. Do not excavate to the final grade level until just before the concrete or masonry is to be placed.

7.3.2.3 Drainage

Provide for the collection and disposal of surface and subsurface water encountered during construction. Completely drain the construction site during periods of construction to keep soil materials sufficiently dry. Construct storm drainage features (ponds/basins) at the earliest stages of site development, and throughout the construction grade the construction area to provide positive surface water runoff away from the construction activity and/or provide temporary ditches, swales, and other drainage features and equipment as required to maintain dry soils. When unsuitable working platforms for equipment operation and unsuitable soil support for subsequent construction features develop, remove unsuitable material and provide new soil material as specified herein. It is the responsibility of the Contractor to assess the soil and ground water conditions presented by the plans and specifications and to employ necessary measures to permit construction to proceed.

7.3.2.4 Dewatering

Dewatering is subject to permitting by the State and shall be conducted according to an approved City of Pueblo dewatering plan through the Stormwater Utility Department.

Control groundwater flowing toward or into excavations to prevent sloughing of excavation slopes and walls, boils, uplift and heave in the excavation and to eliminate interference with orderly progress of construction. French drains, sumps, ditches or trenches are not permitted within 3′ of the foundation of any structure, except with written approval by the City Engineer. Control measures shall be established prior to the time that the excavation reaches the water level in order to maintain the integrity of the in-situ material. While the excavation is open, maintain the water level continuously, at least 2′ below the working level. Operate the dewatering system continuously until construction work below existing water levels is complete. In the event of minor ground water conditions being present, it is the contractor's responsibility to dewater prior to compaction.

7.3.2.5 Trench Excavation Requirements

Excavate the trench as recommended by the manufacturer of the pipe to be installed. Slope trench walls below the top of the pipe, or make vertical, and of such width as recommended in the manufacturer's printed installation manual. Provide vertical trench walls where no manufacturer's printed installation manual is available. Shore the trench walls, cut them back to a stable slope, or provide an equivalent means of protection for employees who may be exposed to moving ground or a cave in, as determined by the Contractor's Safety Engineer or other competent person. Excavate trench walls that are cut back to at least the angle of repose of the soil. Give special attention to slopes which may be adversely affected by weather or moisture content. Do not exceed the trench width below the pipe top of 24″ plus pipe outside diameter (O.D.) for pipes of less than 24″ inside diameter, and do not exceed 36″ plus pipe outside diameter for sizes larger than 24″ inside diameter. Where recommended trench widths are exceeded, the Contractor will provide redesign, stronger pipe, or special installation procedures. The Contractor is responsible for the cost of redesign, stronger pipe, or special installation procedures without any additional cost to the City.

(a) Bottom Preparation. Grade the bottoms of trenches accurately to provide uniform bearing and support for the bottom quadrant of each section of the pipe. Excavate bell holes to the necessary size at each joint or coupling to eliminate point bearing.

(b) Removal of Unyielding Material. Where unyielding material is encountered in the bottom of the trench, remove such materials below the required grade and replace with suitable materials as provided in paragraph 7.3.12 FILLING, BACKFILLING AND COMPACTION.

(c) Removal of Unstable Material. Where unstable material is encountered in the bottom of the trench, remove such material to the depth directed and replace it to the proper grade with select granular material as provided in paragraph 7.3.12 FILLING, BACKFILLING AND COMPACTION. When removal of unstable material is required due to the Contractor's fault or neglect in performing work, the Contractor is responsible for excavating the resulting material and replacing it without additional cost to the City.

(d) Excavation for Appurtenances. Provide excavation for manholes, catch-basins, inlets, or similar structures sufficient to leave at least 12″ clear between the outer structure surfaces and the face of the excavation or support members. Clear rock or loose debris and cut to a firm surface either level, stepped, or serrated, as directed by the Engineer. Remove loose disintegrated rock and thin strata. When concrete or masonry is to be placed in the excavated area, take special care not to disturb the bottom of the excavation. Do not excavate to the final grade level until just before the concrete or masonry is to be placed.

(e) Jacking, Boring, and Tunneling. Unless otherwise indicated, provide excavation by open cut except the sections of a trench may be jacked, bored, or tunneled if, in the opinion of the Engineer, the pipe, cable, or duct can be safely and properly installed and backfill can be properly compacted in such sections. The utility shall be at a cover depth of not less than 48″ unless approved by the City Engineer. Equipment to be used and method of installation shall be presented to the City Engineer for approval prior to any installation.

(f) Underground Utilities. The contractor is responsible for the movement of construction machinery and equipment over pipes and utilities during construction. Work performed adjacent to non-City utilities shall be in accordance with procedures outlined by the utility owner. For work immediately adjacent to or for excavations exposing a utility or other buried obstruction, excavate by hand. Start hand excavation on each side of the indicated obstruction and continue until the obstruction is uncovered or until clearance for the new grade is assured. Support uncovered lines or other existing work affected by the excavation until approval for backfill is granted by the Engineer. Report damage to utility lines or subsurface construction to Engineer immediately.

(g) Asphalt Patch. If the distance from the lip line of the curb & gutter to the trench is less than 4′, all asphalt shall be removed from lip to the trench line. Asphalt shall have a sawcut edge 12″ on either side of the trench, and 2’ of CLSM directly beneath HMA.

7.3.2.6 Potholing Backfill Requirements

It is the responsibility of the contractor working within the public right-of-way to locate all utilities and telecommunication infrastructure prior to beginning any work. The locating of these utility infrastructures shall be performed by a licensed contractor and shall conform to the following requirements:

(a) Utility locate potholes shall not be placed in the wheel path of a travel lane or within 10-feet of a crosswalk. Potholes shall not be placed within the concrete accessible walking surfaces of curb ramps; if a pothole must be made in these surfaces, the contractor shall replace the entire concrete section or curb ramp.

(b) All utility locate potholes in the pavement section, sidewalk, or curb and gutter shall be cored with a circular coring saw with a maximum diameter of 12-inches. The plug shall

be carefully removed, without causing damage to the plug. The plug shall be marked and removed from the site until such time as it is returned in the core hole.

(c) Excavations for potholes shall be backfilled with CLSM in accordance with Article 4.2.3. Native material removed shall not be used to backfill the pothole.

(d) All plugs will be placed back in the corresponding hole in the original orientation at the time of restoration. The sides of the plugs shall be coated and the top sealed with permanent bonding agent.

(e) In the event the core plugs are damaged or cannot be used to fill the core hole, the asphalt shall be repaired using hot mix asphalt paving material from the City approved list. For concrete plugs, repairs shall be made using a 4,000-psi concrete mix.

(f) Core holes shall be cleaned and tacked prior to placing hot mix asphalt paving materials to the thickness of the existing asphalt.

(g) Initial locate potholes may be temporarily repaired, meeting all applicable safety requirements, for no more than 30 days unless additional time is authorized by the City in writing.

7.3.3 STRIPPING OF TOPSOIL

Where indicated or as directed, strip topsoil to a depth as prescribed in the construction plans or to a depth of 4″. Spread topsoil on areas already graded and prepared for topsoil, or transport and deposit it in stockpiles convenient to the areas that are to receive application of the topsoil later, or at locations indicated or specified by the Engineer. Keep topsoil separate from other excavated materials, brush, litter, objectionable weeds, roots, stones larger than 2″ in diameter, and other materials that would interfere with planting and maintenance operations.

7.3.4 CLEARING AND GRUBBING

Always keep roads and walkways free of dirt and debris.

7.3.4.1 Clearing

Clearing consists of the felling, trimming, and cutting of trees into sections and the satisfactory disposal of the trees and other vegetation designated for removal, including downed timber, snags, brush, and rubbish occurring within the areas to be cleared. Clearing also includes the removal and disposal of structures that obtrude, encroach upon, or otherwise obstruct the work. Cut off flush with or below the original ground surface trees, stumps, roots, brush, and other vegetation in areas to be cleared, except such trees and vegetation that are indicated or directed to be left standing. Trim dead branches that are 1-1/2″ or more in diameter on trees designated to be left standing within the cleared areas and trim all branches to the heights indicated or directed. Neatly cut close to the bole of the tree or main branches, limbs and branches to be trimmed. Paint, with an approved tree-wound

paint, cuts more than 1-1/2″ in diameter.

(a) Tree Removal. Where indicated or directed, trees, and stumps that are designated as trees, shall be removed from areas outside those areas designated for clearing and grubbing. This works includes the felling of such trees and the removal of their stumps and roots. Dispose of trees as specified in this Section.

(b) Pruning. Prune/trim trees designated to be left standing within the cleared areas of dead branches 1-1/2″ or more in diameter; and trim branches to heights and in a manner as indicated. Neatly cut limbs and branches to be trimmed close to the bole of the tree or main branches. Paint cuts more than 1-1/4″ (should highlighted be different values) in diameter with an approved wound paint.

7.3.4.2 Grubbing

Grubbing consists of the removal and disposal of stumps, roots larger than 3″ in diameter, and matted roots from the designated grubbing areas. Remove material to be grubbed, together with logs and other organic or metallic debris not suitable for foundation purposes, to a depth of no less than 18″ below the original surface level of the ground in areas indicated to be grubbed and in areas indicated as construction areas, such as areas for buildings, and areas to be paved. Fill depressions from grubbing with suitable material and compact to make the surface conform with the original adjacent surface of the ground.

After clearing and grubbing is complete, the Contractor shall notify the Engineer for his approval of the clearing and grubbing prior to subsequent earthwork operations.

7.3.5 DISPOSAL OF MATERIALS

Dispose of excess materials in accordance with the approved solid waste management permit and all local and state requirements.

All wood or wood-like materials remaining from clearing, pruning or grubbing such as limbs, treetops, roots, stumps, logs, rotten wood, and other similar materials shall become the property of the Contractor and disposed of as specified. If stated on the drawings, the Contractor shall stockpile the stripped materials at a location designated by the Engineer for future use. When a site is not designated, the Contractor must dispose of the material off site.

7.3.6 BURNING

Burning to remove or dispose of materials will not be permitted.

7.3.7 REMOVAL OF STRUCTURES AND OBSTRUCTIONS

All existing physical features which conflict with the new construction shall be removed by the Contractor and disposed of properly at a site acceptable to the Engineer. These shall include but not be limited to; asphalt or concrete paving, base course, miscellaneous concrete flatwork, curb and gutter, sidewalk, foundations, culverts and headwalls, fences, abandoned utilities, and any other items not intended to remain. Where required to obtain a

straight line without jagged edges, the removal shall require sawcutting. Sawcuts shall be a minimum of one-fourth the thickness of material (or deeper) to obtain a clean straight face.

Unless specifically noted otherwise on the drawings or in the Special Provisions, sawcuts shall be considered subsidiary to the removal item and will not be paid for separately. If any items are removed or damaged by the Contractor beyond the limits of demolition shown on the drawings or as marked in the field, they shall be replaced by the Contractor at no expense to the City.

7.3.8 ROCK OR MAN-MADE OBSTRUCTION EXCAVATION

Rock will be defined as any naturally occurring or man-made material in such a form that it cannot be readily removed using the equivalent of a 165 hp/40,000 lb operating weight track-type tractor (bulldozer) with a ripper or a 188 hp/63,000 lb operating weight hydraulic excavator (crawler mounted backhoe) with “rock teeth” without a significant loss of production. It also includes boulders exceeding 1/2 CY in volume.

Whenever rock material is encountered in an excavation, the Contractor shall immediately notify the Engineer for field verification. The Engineer shall measure and document the limits of the rock prior to excavation. Any rock removed prior to notification will not be considered for payment.

Blasting for rock excavation will only be allowed with the written permission of the City Engineer and Fire Chief. The Contractor shall exercise the utmost care to protect the public from harm and to avoid property damage. Blasting shall be done by a State licensed blaster. The Contractor shall comply with all laws, ordinances, insurance, bonding, and applicable safety code requirements and regulations and shall be responsible for all damage caused by the blasting operations.

7.3.9 SHORING

Shoring shall be used for all excavations greater than 5′ in depth or where it is known that in-situ soils lack the stability to hold near vertical faces. Sloping back trench walls rather than shoring shall only be permitted when all the following conditions are met:

(a) The excavation is less than 20′ in depth,

(b) There are no adjacent structures, roads, or pavements that will affect the excavation,

(c) No equipment, stored material, or overlying material will affect the excavation,

(d) Vibration from equipment, traffic, or blasting will not affect the excavation,

(e) There will be no ground water problems,

(f) Surcharges will not affect the excavation, and

(g) Site conditions permit laying back the slopes of the excavation.

For excavations exceeding 20′ depth, submit drawings and calculations, certified by a registered professional engineer, describing the methods for shoring and sheeting, to City Engineer 15 days prior to start of work. Finish shoring, including sheet piling, and install as necessary workers, banks, adjacent paving, structures, and utilities. Remove shoring, bracing, and sheeting as excavations are backfilled, in a manner to prevent caving.

7.3.10 GRADING AREAS

Divide work into grading areas within which satisfactory excavated material will be placed in embankments, fills, and required backfills. Do not haul satisfactory material excavated in one grading area to another grading area except when directed in writing by the Engineer. Place and grade stockpiles of satisfactory and unsatisfactory material as specified. Keep stockpiles in a neat and well drained condition, giving due consideration to drainage at all times. Clear grub, and seal by rubber-tired equipment, the ground surface at stockpile locations; separately stockpile excavated satisfactory and unsatisfactory materials. If the contractor fails to protect the stockpiles, and any material becomes unsatisfactory, the Contractor shall be required to remove and replace such material with satisfactory material from approved sources at no additional cost to the City.

7.3.11 SUBSURFACE PREPARATION

(a) General Requirements. Remove and replace unsatisfactory material with satisfactory materials, as directed by the Engineer, in surfaces to receive fill or in excavated areas. Scarify the surface to a depth of 6″ before the fill is started. Plow, step, bench, or break up sloped surfaces steeper than 1:4 vertical: horizontal so that the fill material will bond with the existing material. When subgrades are less than the specified density, break up the ground surface to a minimum depth of 6″, then pulverize and compact to the specified density. When the subgrade has been previously disturbed by construction activity, scarify the excavated or natural ground portion to a depth of 12″ and compact it as specified for the adjacent fill.

(b) Frozen Material. Do not place material on surfaces that are muddy, frozen, or contain frost.

(c) Finish compaction by sheepsfoot rollers, pneumatic-tired rollers, steel-wheeled rollers, or other approved equipment well suited to the soil being compacted. Moisten material as necessary to 95% of optimum moisture.

7.3.12 FILLING, BACKFILLING AND COMPACTION

Place fill and backfill beneath and adjacent to any and all types of structures, in successive horizontal layers of loose material not more than 8″ in depth, or in loose layers not more than 5″ in depth when using hand-operated compaction equipment. Compact to at least 95% of a Standard Proctor laboratory maximum density, except as otherwise specified. Perform compaction in such a manner as to prevent wedging action or eccentric loading upon or against the structure. Moisture condition the fill and backfill material to within range of ±2% of optimum moisture content at the time of compaction. Prepare the ground surface on which backfill is to be placed and perform the compaction requirements for backfill

materials in conformance with the applicable portions of paragraphs *7.3.11 SUBSURFACE PREPARATION. The top 24" of utility trenching shall be filled with CLSM.* Finish compaction by sheepsfoot rollers, pneumatic-tired rollers, steel-wheeled rollers, vibratory compactors, or other approved equipment.

If requested by the Contractor and/or Developer, and written permission is granted by the Director of Public Works, backfill for utility trenches may be consolidated using water induced settlement techniques (i.e., jetting/puddling/ponding). This method of trench backfill consolidation shall only be allowed in those special locations where a failure history exists for trenches using conventional engineered controlled fill. As a condition of permission to use jetting/puddling, the Contractor and/or Developer must agree in writing to provide a full and complete three (3) year warranty from the final acceptance date, that shall include repair of any surface amenities to the complete satisfaction of the City which may include a full width asphalt overlay if warranted.

Where backfill for utility trenches within the roadway section are consolidated using jetting/puddling, the moisture and density requirements within the trench compaction limits stated above shall not apply; however, the compaction limits for the finished roadway subgrade as outlined within this Article shall apply

Specific requirements and guidance for Sanitary Sewer and Storm Sewer can be found in ARTICLES 11 & 12.

7.3.13 EMBANKMENTS

Construct earth embankments from satisfactory materials free of organic or frozen material and rocks with any dimension greater than 3″. Place the material in successive horizontal layers of loose material not more than 8″ in depth. Spread each layer uniformly on a soil surface that has been moistened or aerated as necessary and scarified or otherwise broken up so that the fill will bond with the surface on which it is placed. After spreading, plow, disk, or otherwise break up each layer; moisten or aerate as necessary; thoroughly mix; and compact to at least 95% of the Standard Proctor laboratory maximum density. Compaction requirements for the upper portion of earth embankments forming subgrade for pavements are identical with those requirements specified in paragraph 7.3.15 SUBGRADE PREPARATION. Finish compaction by sheepsfoot rollers, pneumatic-tired rollers, steel-wheeled rollers, vibratory compactors, or other approved equipment.

7.3.14 BORROW

When the quantity of suitable excavated material required for the embankment and subgrade preparation is greater than the quantity that can be obtained from the excavation in the project, the Contractor shall make-up the deficiency from borrow pits. The borrow material shall be obtained from sources selected by the Contractor subject to approval of the Engineer. All material shall be clean and free from any environmental hazards. The Contractor shall obtain the written permission from the owner to procure borrow material, shall pay all royalty and other charges involved and shall bear all the expenses of developing the sources, including right-of-way for hauling.

7.3.15 SUBGRADE PREPARATION

7.3.15.1 Proof Rolling

Unsuitable materials encountered in the subgrade, roadway, or embankment foundation that are determined to be detrimental to the roadway or embankment shall be removed to the depth and extents directed by the Engineer. The excavated area shall be backfilled to the finished graded section with approved material. Materials that contain organics, or those that cannot be dried or moisture conditioned, then compacted to the required density, shall be disposed of and shall not be reused as embankment fill. Materials that do not contain organics that can be dried, or moisture conditioned and compacted to the required density may be reused as embankment fill as approved by the Engineer.

Proof rolling with pneumatic tire equipment shall be performed using a minimum axle load of 18 kips per axle and at speeds between 2 to 6 mph. A weigh ticket from an approved scale shall be furnished by the Contractor to substantiate this weight.

The subgrade shall be proof rolled after the required compaction has been obtained and the subgrade has been shaped to the required cross section.

The proof roller shall be operated in a systematic manner so that a record may be readily kept of the area tested and the working time required for the testing. Areas that are observed to have soft spots in the subgrade, where deflection is not uniform or is excessive as determined by the Engineer, shall be ripped, scarified, dried or wetted as necessary, and recompacted to the requirements for density and moisture at the Contractor's expense. After re-compaction, these areas shall be proof rolled again and all failures again corrected at the Contractor's expense.

Upon approval of the proof rolling, the subbase, base course, or initial pavement course shall be placed within 48 hours. If the Contractor fails to place the subbase, base course, or initial pavement course within 48 hours or the condition of the subgrade changes due to weather or other conditions, proof rolling, and correction shall be performed again at the Contractor's expense.

7.3.15.2 Construction

Shape subgrade to line, grade, and cross section, and compact as specified. Include plowing, discing, and any moistening or aerating required to obtain specified compaction for this operation. Remove soft or otherwise unsatisfactory material and replace it with satisfactory excavated material or other approved material as directed. Excavate rock encountered in the cut section to a depth of 6″ below finished grade for the subgrade. Bring up low areas resulting from the removal of unsatisfactory material or excavation of rock to the required grade with satisfactory materials, and shape the entire subgrade to line, grade, and cross section and compact as specified. After rolling, the surface of the subgrade for roadways shall not show deviations greater than 1/2″ when tested with a 10′ straightedge applied both parallel and at right angles to the centerline of the area. Do not vary the elevation of the finish subgrade more than 0.05′ (3/5″) from the established grade and cross section.

7.3.15.3 Compaction

Finish compaction by sheepsfoot rollers, pneumatic-tired rollers, steel-wheeled rollers,

vibratory compactors, or other approved equipment. Compact each layer of the embankment to at least 95% of a Standard Proctor laboratory maximum density.

7.3.16 EXCAVATION AND DIRECTIONAL BORING

No excavation or directional bore shall be made without prior notification of **ALL** utility companies and the City Public Works Department. All excavations shall be done by open cut from the surface by an approved method of trenchless technology.

In open cut excavations, all excavated material determined to be saturated shall be removed from the site daily.

The width of all trenches shall be kept to a minimum but provide adequate space for workers and safety devices. All Federal, State, and Local regulations pertaining to worker safety and health shall be followed.

In existing paved areas, all telecommunications and cablevision installations shall be done using directional boring unless otherwise approved by the City Engineer. See 7.3.2.5 (e) Trench Excavation Requirements for jacking, boring, and tunneling.

7.3.17 FINISHING

Finish the surface of excavations, embankments, and subgrades to a smooth and compact surface in accordance with the lines, grades, and cross sections or elevations shown. Provide the degree of finish for graded areas within 0.1′ of the grades and elevations indicated except the degree of finish for subgrades specified in paragraph *7.3.15 SUBGRADE PREPARATION.* Finish gutters and ditches in a manner that will result in effective drainage. Finish the surface of areas to be turfed from settlement or washing to a smoothness suitable for the application of turfing materials. Repair graded, top-soiled, or backfilled areas prior to acceptance of the work, and re-establish grades to the required elevations and slopes.

7.3.18 DUST PREVENTION

During construction and until final acceptance by the Engineer, the Contractor shall be responsible for controlling dust emissions in the construction area. No earthwork activities shall be performed when the wind speed exceeds 30 MPH. Whenever conditions exist that create airborne soil particles, at the Contractors expense, wet all disturbed areas as often as necessary to control the dust. All fill areas shall be compacted daily to the specified compaction. Any mud or dirt carried out onto paved surfaces shall be cleaned up daily and when directed by the Engineer. Failure by the Contractor to comply with the above may result in the Engineer issuing a stop-work order until the problems are corrected. Any dust control or clean-up done by City crews will be back charged to the Contractor.

When a building permit is issued for a structure and the site disturbance is greater than 1,000 square feet but less than or equal to 1 acre, a sign-off at Pueblo Regional Building Department is required. Areas of land disturbance greater than 1 acre but less than 25 acres require an **Emission Permit Application: Land Development/Construction**

Activity. The permits are available at the Pueblo City and County Health Department and are to be secured by the Contractor. Dust Prevention will not be paid for as a separate bid item.

7.3.19 EROSION AND SEDIMENT CONTROL

All construction activities disturbing more than 1 acre will require a *General Permit for Stormwater Discharges Associated With: Construction Activity* issued by the "Colorado Dept of Health, Water Quality Control Division, Permits and Enforcement Section". A Stormwater Management Plan (SWMP) is required as a condition of obtaining said permit. A copy of the Construction Activity Permit and the Stormwater Management Plan shall be submitted to the City of Pueblo Stormwater Management Department for review.

In addition to the SWMP, an erosion control plan stating the "Best Management Practices" (BMPS) to control erosion, sediment, and stormwater quality during and after the construction activity shall be submitted to the City of Pueblo for review. The erosion control plan shall be prepared in accordance with the provisions set forth in The City of Pueblo's *Storm Drainage Design Criteria and Drainage Policies Manual.*

Guidance for engineers, contractors, and developers in the selection, design, and maintenance of "Best Management Practices" to improve stormwater run-off quality can be found in Volume 3 of the *Urban Storm Drainage Criteria Manual* or most current edition.

7.3.20 QUALITY CONTROL

The contractor/developer shall provide the City Engineer with a soil classification, including a sieve analysis, plasticity index and a Proctor curve for each of the different soils to be encountered at the site. Copies of all field moisture/density testing performed by independent testing firms shall be submitted to the City. The cost for these tests shall be paid for by the Contractor for City projects.

Field testing for moisture content and dry density of the compacted soil will be done by a qualified geotechnical testing service. The frequency and location for the tests will be at the City's discretion. In general, a minimum of one test per foot of fill and/or along the bases of cuts and fills, will be taken for each 200′ of roadway being constructed.

Any areas where the field test indicates that the soil does not meet the moisture or density specification shall be wetted or dried as necessary and reworked until the requirements are satisfied.

7.4 METHOD OF MEASUREMENT

In general, excavation and embankment will not be measured or paid for as a separate bid item but will be considered subsidiary to a bid item such as hot bituminous pavement, sidewalk, driveway, curb & gutter, etc.

When paid for as a separate bid item, excavation and embankment will be measured by the volume <u>of embankment</u> in cubic yards as compacted in-place, based on the grading plans and cross sections. When paid for as a separate bid item, borrow shall be measured in cubic yards

in its original position using the method of end areas.

The measured volume for unsuitable material shall be the actual measurements of the excavation required to remove the objectionable material computed to cubic yards. When the unsuitable material is replaced by aggregate base course, the measurement shall be by the volume in cubic yards or by the ton and fraction thereof as evidenced by weight tickets for each truckload placed.

Rock excavation shall be measured as the actual volume in cubic yards of verified rock removed to the limits established by the Engineer.

7.5 BASIS OF PAYMENT

No payment will be made for excavation and/or embankment unless noted otherwise in the Special Provisions. When paid for, embankment will be paid for per cubic yard as compacted in place, with the material measured in accordance with *Section 7.4 METHOD OF MEASUREMENT.*

All costs associated with clearing and grubbing, removal of obstructions, excavation, embankment, compaction, grading and all related work shall be paid for as a separate bid item unless otherwise noted in the project's plans and/or special provisions.

Payment for excavation to remove unsuitable material beyond the compaction limits shall be full compensation for all costs associated with the complete removal and disposal including hauling and landfill fees if necessary, and the replacement with suitable material.

Rock excavation will include all costs associated with the removal and disposal of rock as defined in this Article. Payment for rock excavation will be for the actual costs of documented labor and equipment associated with rock removal plus a 15% mark-up. Rates for equipment shall not exceed the rental rates used by the Colorado Department of Transportation.

{This Page Intentionally Left Blank}

ARTICLE 8

PAVEMENT

8.1 ASPHALT PAVEMENT

8.1.1 DESCRIPTION

Asphalt concrete pavement shall consist of asphalt cement uniformly mixed with well-graded aggregate and laid upon a prepared surface, along the lines and to the thickness as shown on the approved plans.

8.1.2 SUBMITTALS

Asphalt suppliers furnishing asphalt for placement within any City right-of-way shall provide to the City, once every two years, asphalt mix designs for asphalt intended for use within the City right-of-way.

8.1.3 MATERIALS

8.1.3.1 Asphalt Cement

Asphalt cement for the pavement mixture shall be SPG 58-28 (residential streets) or SPG 64-22 or SX PG 64-28 (arterial, collector, and industrial streets) unless otherwise specified in Article 2 - Special
Provisions and shall conform to the requirements of Table 2 of AASHTO M-226 (latest revision). The asphalt cement shall be homogeneous, free from water, and show no tendency to foam when heated to 347°F. The spot test shall be negative for all grades when conducted with a napthaxylene solvent containing not more than 10% xylene by volume.

Asphalt cement shall not be heated during the process of its manufacture, storage or during construction, to a temperature that will cause the formation of carbonized particles. After loading in a tank for transportation from the refinery to the purchaser at no time shall the temperature of the asphalt cement be raised above 375°F

Written Certification of Compliance with these specifications shall be provided to the City Engineer. The City Engineer may, in the absence of written certification, require that samples of the asphalt cement be delivered to an approved testing laboratory to ensure compliance with these specifications. Costs for testing shall be paid for by the Contractor/Developer.

8.1.3.2 Aggregate

The coarse and fine aggregates for hot bituminous pavement mixtures shall be graded and combined in such proportions that the resulting composite blend meets the grading requirements of the job mix formula. The job mix formula, with the aggregate tolerances, shall be within the master range set forth in the following table:

Table 8.1. Percent by weight passing square mesh sieves

Sieve Size	Grading SF	Grading ST	Grading SX	Grading S
1 1/2″				
1″				100
3/4″			100	90-100
1/2″		100	90-100	*
3/8″	100	90-100	*	*
No. 4	90-100	*	*	*
No. 8	*	28-58	28-58	23-49
No. 16	30-54			
No. 30	*	*	*	*
No. 200	2-12	2-10	2-10	2-8

The grading of the aggregate shall be Grading SX unless otherwise approved by the City Engineer.

Coarse aggregate (material retained on the No. 8 sieve) shall have a "Los Angeles Abrasion Test" (AASHTO T-96) percentage of wear not exceeding 45%. Fine aggregate (material passing the No. 8 sieve) shall have a maximum of 12% wear at five cycles in the sodium sulfate solution by the “Soundness Aggregate Test (AASHTO T-104). The aggregate shall be free from clay balls, organic matter, or other deleterious substances. At least 60% of the aggregate retained on the No. 4 sieve, and larger, shall have at least two fractured faces.

8.1.3.3 Asphalt-Aggregate Mixture (Job Mix Formula)

The Contractor/Developer shall furnish to the City Engineer a mix design, from an approved independent testing laboratory, of the hot bituminous pavement proposed for use. This job mix formula shall establish a single percentage of aggregate passing each required sieve size, a single percentage of bituminous material to be added to the aggregate, and a single temperature for the mixture at the discharge point at the plant. The job mix formula shall also give recommended temperatures for delivery and compaction. The job mix formula shall be determined a minimum of once per year, or when the asphalt supplier or aggregate characteristics change. **After the job mix formula has been established, all mixtures furnished for respective projects shall conform to within the following range of tolerances:**

Table 8.2. Percent by weight passing square mesh sieves

Maximum Size	± 0%
Passing No. 8 and larger sieves	± 8%
No. 8 to No. 200	± 6%
Passing No. 200	± 2%

Asphalt Content	± 0.5%
Discharge Mix Temperature	± 20°F

The job-mix formula may be changed by the City Engineer for either of the following reasons:

(a) Change in the job-mix formula will produce material of equal or better quality and will provide for more efficient pit operations.

(b) Change in the job-mix formula will produce material of equal or better quality and will result in a cost savings to the City through an adjustment in unit price.

Asphalt mix designs containing reclaimed asphalt pavement (RAP) materials greater than 20% will only be allowed with written approval from the City Engineer.

8.1.3.4 Quality Control

All samples and tests described herein shall be made in accordance with approved ASTM/AASHTO procedures. The Contractor/Developer shall provide for all testing laboratory services in connection with tests verifying conformance of proposed materials with project requirements. The City may also provide for testing laboratory services in connection with tests on materials after incorporation into the project.

Additional tests may be required at the direction of the Engineer. If additional tests are required, the financial burden will be borne by the Contractor/Developer if the testing results fail to meet minimum city specifications. If the testing results meet or exceed the city specifications the additional testing costs will be paid for by the requesting entity.

Table 8.3. Minimum Project Testing

Gradation	1/1,000 Tons or 1/project site
Asphalt Content	1/1,000 Tons or 1/project site
In-Place Density (including cores & comparative lab densities)	1/1,000 Tons or min. 1/500 L.F. of paving

8.1.4 MIXING PLANT

The requirements of this section shall be the same as Section 401.08 “Asphalt Mixing Plant” of the Standard Specifications for the Road and Bridge Construction, by the Colorado Department of Transportation, 1991 edition, or as amended. For plant inspection, the Engineer or approved laboratory shall have full right to enter at any time and conduct necessary tests to ensure compliance with these specifications.

8.1.5 CONSTRUCTION METHODS

8.1.5.1 Hauling Equipment

Trucks used for hauling the asphalt concrete mixture shall be equipped with tight, clean, smooth metal beds. When directed by the Engineer, the beds shall be coated with an oil or other approved material to prevent the mixture from adhering to the beds. Each load shall be covered

with canvas or other suitable material of sufficient size to protect it from inclement weather conditions.

8.1.5.2 Paving Machines

Unless otherwise permitted by the Engineer, the mixture shall be spread by means of a self-propelled laydown machine equipped with a screed or strike-off assembly and capable of spreading and finishing the asphalt concrete mixture to the line, grade, and crown as shown on the plans.

The paver shall be equipped with a receiving hopper having sufficient capacity for a uniform spreading operation. The hopper shall be equipped with a distribution system to place the mixture uniformly in front of the screed. The mixture shall be dumped in the center of the hoppers, and care exercised to avoid overloading and spilling over of the mixture onto the base.

The screed or strike-off assembly shall effectively produce a finished surface of the required evenness and texture without tearing, shoving, or gouging the mixture.

When laying mixtures, the paver shall be capable of being operated at the necessary forward speeds for satisfactory placement. The operation of the paver shall be as such to attain continuous paving.

8.1.5.3 Rollers

Rollers shall be steel wheeled and/or pneumatic tire type and be in good condition, capable of reversing without backlash. They shall weigh not less than 8 tons. All rollers shall have a water system capable of keeping the wheels properly moistened to prevent adhesion of the mixture to the wheels.

8.1.5.4 Paving Surface

After the pavement base has been prepared, it shall be made ready for paving by clearing any loose material off as directed by the Engineer. Edges of all contact surfaces such as curb and gutter, manholes, cross pans and other structures shall be coated with the tack coat material as described herein before paving. When more than one lift is required, a tack coat shall be used between courses of pavement in accordance with Section 8.2 of these specifications as directed by the Engineer.

Asphalt pavement shall be a minimum of 2″ compacted thickness and shall be laid in one lift. If a thickness greater than 3″ is specified, separate courses shall be laid; each course shall be not less than 1-1/2″ compacted thickness, nor greater than 3″ compacted thickness or three times the nominal aggregate size.

For overlays the material shall be placed in a maximum compacted thickness of 3” and a minimum compacted thickness of twice the diameter of the aggregate unless otherwise directed by the Engineer.

8.1.5.5 Spreading, Finishing, and Compaction

The mixture shall be laid upon the approved base surface, spread, and struck off to the grade and elevation required. Pavers shall be used to distribute the mixture over the entire surface except where hand placing is necessary.

The longitudinal and transverse joints shall be made in a careful manner, well bonded and sealed. If directed, the joints shall be coated with tack coat material.

On the areas where the use of mechanical pavers cannot be used, the mixture shall be spread, raked and luted by hand tools. When material is shoveled, it shall be deposited by turning the shovel over above the desired area. No "slinging" of the shovel will be permitted. The hand placed material shall be smoothed and left higher than the machine laid material by about 1/4″ per inch of depth prior to rolling. If the machine laid mixture has been rolled, then the hand laid mixture shall be smoothed and left higher than the rolled pavement by about 1/4″ per inch depth. The majority of the raker's work shall be done with a lute rather than a tined rake.

Segregation of materials shall not be permitted. If segregation occurs, the spreading operation shall be immediately suspended until the cause is determined and corrected.

Placement of the mixture shall be as continuous as possible. All surface irregularities shall be adjusted by the addition or removal of mixture prior to rolling. After the mixture has been spread, struck off and surface irregularities adjusted, it shall be thoroughly and uniformly compacted by rolling.

The surface shall be rolled at a specified breakdown temperature which shall be determined by the Contractor's foreman and the Engineer at the beginning of the job. The breakdown temperature shall be such that the required density is obtained without displacement, cracking, or shoving of the mixture. The rollers shall operate at a speed slow enough to avoid displacements or "crawl" of the mixture. Any displacement shall be immediately corrected by means suitable to the Engineer.

The number, weight, and type of rollers furnished shall be sufficient to obtain the required compaction while the mixture is in a workable condition. The minimum number of rollers shall be two. Heavy equipment or rollers shall not be allowed to stand on freshly placed pavement.

Unless otherwise directed, rolling shall begin at the sides and proceed longitudinally parallel to the street centerline, each pass overlapping one-half the roller width, gradually progressing to the crown of the street. When paving adjacent to a previously placed lane, the longitudinal joint shall be rolled first followed by the regular rolling procedure.

Rolling shall be continued until all roller marks are eliminated and no further compression is possible. The minimum density of the compacted mixture shall be 95% of the maximum density required to provide laboratory compacted specimen made in the same proportions as the job mix formula (AASHTO T-209). However, if in the opinion of the Engineer a 95% density would prove to be detrimental to the asphalt cement pavement, then a density of 93% will be allowed. Along forms, curbs, manholes, and other places not accessible to rollers, the mixture shall be thoroughly compacted with hand tampers or with mechanical tampers. The joints between these structures shall be effectively sealed.

Any mixture that becomes loose and broken, mixed with dirt, or is in any way defective shall be removed and replaced with fresh hot mixture, which shall be compacted to conform with the surrounding area.

8.1.5.6 Asphalt Temperature

The minimum and maximum delivery and discharge temperatures of the asphalt to the jobsite shall comply with CDOT Section 401.15 “Mixing”.

8.1.5.7 Joints

Transverse joints shall be formed by cutting through the previously laid course to expose the full depth of the course. A coat of tack coat material shall be used on contact surfaces of all joints just before additional mixture is placed.

8.1.5.8 Weather Limitations

Hot mix asphalt shall be placed only on properly prepared unfrozen surfaces that are free of water, snow, and ice. The hot mix shall be placed only when both the air and surface temperatures equal or exceed the temperatures specified in Table 8.4 and the City Engineer determines that the weather conditions permit the pavement to be properly placed and compacted. If the temperature falls below the minimum air or surface temperature, paving shall stop. The temperature of the hot mix asphalt delivered to the jobsite shall not be less than 235°F.

Table 8.4. Minimum Surface and Air Temperature

Compacted Layer Thickness	Minimum Surface and Air Temperature	
	Top Layer	Layers Below Top Layer
1-1/2″	60°F	50°F
2″ - <3″	50°F	40°F
Note: Air temperature is taken in the shade. Surface is defined as the existing base on that the new pavement is to be placed.		

8.1.5.9 Surface and Thickness Tolerances

The surface of the finished pavement shall be free from depressions exceeding 3/16″ in 10′, when tested with a straight-edge. All depressions exceeding the specified tolerances shall be corrected by removing defective work and replacing it with new material as directed. The surface shall be smooth and true to the established crown and grade. The required compacted thickness shall be as specified on the construction drawings.

8.1.6 RESTRICTION OF TRAFFIC

The Contractor shall arrange the work in such a manner as to cause a minimum of inconvenience to the traveling public and the abutting property owners. The Contractor shall submit to the Engineer a plan of this operation. In general, the Contractor shall be allowed to proceed as they propose. However, the Engineer retains the authority to order the Contractor to schedule the proposed operation in another manner if such a change in schedule is to the

benefit of the City and is beneficial to the interests of a good project. The Contractor shall arrange to have the haul vehicles operate over roads which will not be damaged by such vehicles. The Contractor shall provide all necessary Traffic Control in conformity with these provisions and specifications and with the ordinances and regulations of the *City of Pueblo, MUTCD and ARTICLE 9 –Traffic Control*; shall be paid for as specified in the contract documents.

8.1.7 PATCHING

For warranty work or patching repairs, the requirement is for the patching to be equal to the existing pavement thickness or Table 3-1 from the design criteria, whichever is greater.

Remove the backfill material to the depth and extent required in accordance with the drawings. Prepare the subsurface with the required base course, Flowfill, and/or Portland Cement concrete subsurface in accordance with the drawings. Depths and/or thickness of base course, Portland Cement concrete and/or asphalt pavement shall be as indicated on the drawings. The asphalt pavement shall conform to the *Pavement Design Criteria for the City of Pueblo* or equal to the existing pavement thickness, whichever is greater. The backfill and base coarse material shall be thoroughly compacted to the densities specified in *ARTICLE 6 – Aggregate Base Course* with a roller for large areas and smaller hand operated compactor for small patches.

Existing pavement may be rough cut initially in conjunction with trenching; however, a square, even, vertical saw cut shall be made in the existing asphalt pavement after placement of backfill and prior to pavement replacement. The square, vertical saw cut shall be made at a minimum of 1′ back from the trench line into good pavement (not required if using CLSM). Before placement of the new pavement, the cut edges shall be thoroughly cleaned, and a tack coat shall be uniformly and evenly applied to any vertical faces in accordance with Section 8.2. The patch shall be made with the placement of a hot asphalt cement and aggregate mixture as described in this Article. If asphalt cut is within 2′ of the lip of curb & gutter, a new asphalt patch shall extend to the lip of the curb & gutter in a continuous patch.

In large patches or whenever possible, a self-propelled paving machine shall be used to place the mixture. In small patches, the material shall be hand placed or placed with a spreader box without separation of the mixture. The material shall be placed to the grade and thickness required to allow for compaction after rolling. The hot mix material shall be compacted using the number, weight and type of rollers required to provide 95% of the maximum density of a laboratory compacted specimen made in the same proportions as the job mix formula (AASHTO T-209). Rolling shall continue until all roller marks are eliminated and no further compression is possible in the pavement. After rolling the surface, a straight-edge or a stringline shall be used to check the grade and riding quality of the patch.

8.1.8 RECYCLED PLANT MIX BITUMINOUS PAVEMENTS

Plant mixed bituminous pavements shall not contain more than 20% reclaimed asphalt pavement. The reclaimed asphalt pavement shall meet all the requirements for hot bituminous pavement, as contained herein.

8.1.8.1 Reclaimed Asphalt Pavement (RAP) Material

The Engineer may require the Contractor to maintain separate stockpiles for each type of RAP material. All processed material shall be free of foreign materials and segregation shall be minimized. The RAP material shall be processed, if needed, so that at least 95% passes through a 5/8″ sieve. Any RAP material that cannot be readily broken down in the mixing process and/or affects the paving operation, shall be processed prior to mixing with the virgin material.

8.1.8.2 Composition of Mixtures

Tests for cleanliness, abrasion loss, and the percentage of fractured faces will be made on representative samples of aggregate taken during production or from the stockpiles. Proportions of the reclaimed and virgin material shall be determined and proposed by the Contractor/Developer to meet the mix composition requirements of CDOT Standard Specifications for Road and Bridge Construction - Section 400. The maximum aggregate size contained in the combination of reclaimed asphalt pavement and new aggregate shall not exceed the maximum specified in the gradations presented in these specifications.

(a) **Job-Mix Formula.** See Section 8.1 of these specifications for approval of mix design. The cost for this testing shall be the responsibility of the Contractor/Developer.

(b) **Uniformity.** After the job-mix formula has been approved, the owner shall implement an acceptable quality control plan as detailed in Section 8.1.3.4 of these specifications. Deviations from the final approved design for bitumen content and gradation of aggregates shall not be greater than the tolerances listed in Section 8.1.3.3 of these specifications and shall be based on the extraction test.

(c) **Bituminous Mixing Plant**

(1) **Batch Plant.** The batch plant shall be modified to allow weighing the reclaimed asphalt pavement (RAP) material prior to incorporation into the pugmill. The cold feed bin, conveyor system and the special bin adjacent to the weigh box, if used, shall be designed to avoid segregation and stocking of the RAP material. The virgin aggregates shall be dried and heated to a suitable temperature so that on combining with the RAP material at ambient temperature the resulting mix temperature of successive loads may not be a cause for a rejection of the mix by the Engineer. The virgin aggregates shall be free of unburned fuel oil when delivered to the pugmill.

(2) **Drum Mixer Plant.** The drum mixer plant shall be modified to prevent direct contact of the RAP material with the burner flame and/or overheating of the RAP material in the process.

8.1.9 MEASUREMENT AND PAYMENT

Asphalt concrete pavement courses measured by the square yard will be paid for at the contract unit price per square . This payment shall be full compensation for all materials, tools, equipment, and labor necessary to complete the work under this section in accordance with the plans and these specifications. The payment shall be full compensation for all coats applied in accordance with these specifications.

If there is no pay item for asphalt concrete pavement of the type specified, it will not be measured and paid for separately but shall be included in the pay item most closely associated with the work. Payment will be made under:

Table 8.5. Payment Units

Pay Item	Pay Unit
Asphalt Pavement (Asphalt)	Ton
Asphalt Pavement (RAP) (Asphalt)	Ton
Asphalt Pavement (Patching) (Asphalt)	S.F.

8.2 ASPHALTIC TACK COAT

8.2.1 TACK COAT

8.2.1.1 Description

Existing asphalt surfaces receiving an asphalt overlay, existing vertical concrete surfaces (such as curb and gutter, crosspans and manholes) or between layers of multi-course asphaltic pavement structure, shall receive a tack coat consisting of an emulsified asphalt in accordance with these specifications at the locations shown on the plans, or as directed by the Engineer. Tack coat may be eliminated between successive lifts if the Contractor protects the surface from contamination.

8.2.1.2 Surface Preparation

Before applying the tack coat, surfaces shall be thoroughly cleaned of all dirt and other debris to ensure an adequate bond between the tack surface and asphaltic mat. The surface of the existing asphalt must be completely dry before placing tack coat.

8.2.1.3 Liquid Asphalt

The liquid asphalt used for the tack coat shall be an emulsified asphalt whose grade conforms to *CDOT Specifications Section 407* and shall satisfy the requirements of AASHTO M-140 or M-208. Other emulsified asphalts may be used with written permission of the Engineer.

8.2.1.4 Placing

The rate of application shall be 0.1 to 0.3 gallons per square yard and shall provide a uniform and even coating of the surface. The surface shall be allowed to cure to permit drying and setting of the tack coat prior to the paving operation.

8.2.2 MEASUREMENT AND PAYMENT

Payment for the tack coat shall be included in the unit price bid for asphalt pavement, and shall include all materials, tools, equipment, and labor necessary to complete the work in accordance with the plans and specifications, and as directed by the Engineer.

8.3 CONCRETE PAVEMENT

8.3.1 DESCRIPTION

The work performed under this section shall consist of the construction of a pavement composed of Portland cement concrete, with or without reinforcement as specified, on a prepared subgrade or base course in accordance with these specifications. The work performed will be in reasonably close conformity with the lines, grades, thicknesses, and typical cross sections shown on the plans or as established.

8.3.2 MATERIAL

8.3.2.1 General

The specifications presented in this section are performance oriented. The City's objective in setting forth these specifications is to achieve an acceptable quality of streets. All sources for the mined or manufactured materials must be annually approved by the City as having met the appropriate materials performance specifications. This approval is a condition of using those material sources for public improvement construction.

8.3.2.2 Procedure for Material Source Approval

On or before April 1st of each year, a material supplier for any City improvement shall supply written documentation and material test results from a qualified, independent materials testing laboratory that describes:

(a) Material(s) being tested to meet City specifications.

(b) The test procedures employed.

(c) The supplier(s) manufacturing, mining, or treating process by which the tested materials were created.

(d) The material test results.

(e) A signed statement by the material supplier that the materials produced and tested for this certification are truly representative of the materials to be provided for public improvements in the City during the coming 365-day period.

8.3.2.3 Portland Cement Concrete

This material shall consist of a mixture of fine and coarse aggregates, Portland cement, water and other materials or admixtures as required. Comply with ARTICLE 4 – Concrete and ARTICLE 5 – Structural Concrete.

8.3.3 CONSTRUCTION REQUIREMENTS

Materials shall be proportioned, handled, measured, batched, placed, finished and cured in accordance with Section 412 of the CDOT and ASTM C-94 (whichever is more stringent).

8.3.4 QUALITY CONTROL

All samples and tests described herein shall be made in accordance with approved ASTM/AASHTO procedures. The Contractor/Developer shall provide for all testing laboratory services in connection with tests verifying conformance of the proposed materials with the project requirements. The Contractor/Developer shall also provide for testing laboratory services in connection with tests on materials after incorporation into the project, on a first-time basis only. Additional tests may be required at the direction of the Engineer. If additional tests are required, the financial burden will be borne by the Contractor/Developer if the testing results fail to meet minimum city specifications. If the testing results meet or exceed the city specifications the additional testing costs will be paid for by the requesting entity.

During the placement of Portland cement concrete pavement, observation and testing shall be on a full-time basis. For each day of production, aggregate samples shall be obtained for gradation of both the coarse and fine aggregates.

Testing shall be done per ARTICLE 4 – Concrete.

Thickness of fresh concrete must be checked a minimum of every 300 linear feet each traffic lane according to the CDOT Section 412.24. Any noted deficient areas shall be corrected at that time. Surface smoothness shall be tested and corrected as necessary according to CDOT Section 412.16. The Engineer will decide when the pavement shall be opened to traffic; otherwise, the pavement shall not be opened to traffic until 14 days after the concrete was placed, or until the compressive strength of the laboratory cured 6 x 12 cylinders (ASTM C-39) averages 3000 psi. Prior to opening to traffic, the pavement shall also be cleaned, and all joints sealed.

8.3.5 FINAL ACCEPTANCE

All test results shall be submitted to and reviewed by the City. Provided all tests are acceptable, the pavement will be accepted. Should testing indicate unsatisfactory work, the removal, replacement, or grinding of the pavement or reduced payment will be required.

8.3.6 MEASUREMENT AND PAYMENT

The accepted quantities of concrete pavement will be paid for at the contract unit price per square yard. Price and payment shall be full compensation for furnishing and placing all materials, including any dowels, tie bars and joint material.

No additional payment over the unit contract bid price will be made for any pavement which has an average thickness in excess of that shown on the plans. Reinforcing steel, other than as mentioned above, will be measured and paid for in accordance with *ARTICLE 5 – Structural Concrete.*

8.4 PAVEMENT MARKING

See Article 9.3.5

8.5 CRACK SEALING

8.5.1 DESCRIPTION

This item shall consist of furnishing all materials, equipment, labor, cleaning and clean up, traffic control and incidental items necessary for the sealing or filling of cracks in asphalt pavements. The purpose of crack sealing and crack filling is to prevent the intrusion of water and other materials. Crack sealing shall be applicable for cracks 1/4” to 3/4” wide or as recommended by the manufacturer. Crack filler is recommended for cracks that are 1” or wider and/or exhibit edge deterioration.

Crack **Sealer** is used for working cracks, those cracks that have more than 1/4” seasonal movement. Both hot and cold materials are currently available for crack sealing. However, this specification is meant to only apply to hot applied materials.

Crack **Filler** should be used for non-working cracks. Non-working cracks are cracks that have annual movement less than 1/4”. Non-working crack types may include wide transverse cracks. If a crack exhibits edge deterioration it should be filled not sealed.

8.5.2 MATERIALS

Materials used for crack sealing shall meet or exceed the requirements of ASTM D 6690 for Type II Material as specified. Crack sealers are typically viscous at high temperatures and applied with a wand and any excess material is spread with a squeegee. The Contractor/Developer shall provide material certifications and manufacturer’s instructions for heating and application.

Materials used for crack filling shall be a premixed blend of polymer modified asphalt binder and wear resistant aggregates heated and mixed in a specialized melter. They are usually applied using a specialized device and smoothed with a heated float. The Contractor/Developer shall provide material certifications and manufacturer’s instructions for heating and application. Material shall be approved by the Engineer prior to application.

8.5.3 EQUIPMENT

Equipment shall be as specified by the sealant manufacturer and approved by the Engineer. All equipment and machinery shall be kept in good working order, free of leaks and properly muffled. All taxes, licenses and fees shall have been paid and proper licenses and permits shall be posted as required by law.

An oil jacketed type melting unit equipped with both agitation and recirculation systems shall be used to heat the sealant. Direct Fire Melters will not be allowed. The unit shall be equipped with separate thermometers for both the oil bath and the crack sealing material. Thermometers shall be calibrated on a weekly basis to ensure the proper heating of the material.

Materials shall be heated according to the manufacturer’s specifications. Fresh material shall not be added to material that was overheated to make it acceptable. Material that has been overheated shall be removed and discarded.

8.5.4 CONSTRUCTION REQUIREMENTS

Prior to sealing, all loose material shall be blown out of cracks using a heat lance. Care shall be taken not to burn or scorch the pavement. Torches shall not be used. The Contractor/Developer shall ensure that blown debris shall not strike pedestrians, workers, or cause damage to vehicles and/or private property during cleaning and sealing operations. The Contractor/Developer shall clean debris from the streets and sidewalks as soon as the sealant has hardened sufficiently.

Cracks shall be free of moisture, residue from deicing chemicals, vegetation and loose matter prior to sealing. If sealant boils when applied, additional drying is required before sealing resumes.

Cracks shall be sealed to a minimum depth equal to two times the crack width or the full thickness of the pavement. Overband, if used, shall not exceed 3” in width and 1/8” in height above the pavement surface. Overband width is critical when sealing longitudinal cracks or in stopping zones to avoid creating hazards for cyclists or reducing tire friction.

When the Engineer specifies routing of cracks, routing shall precede blowing out cracks.

Engineer shall specify if routing is required prior to placement of Crack Seal and the type of sealant or filler application to be installed:

Flush Fill	**Routed and Flush Filled**
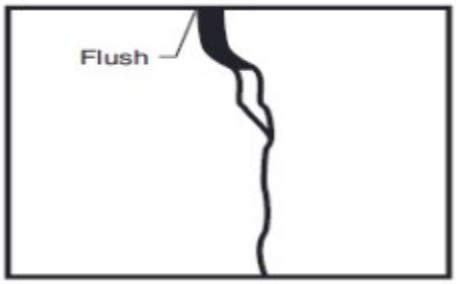	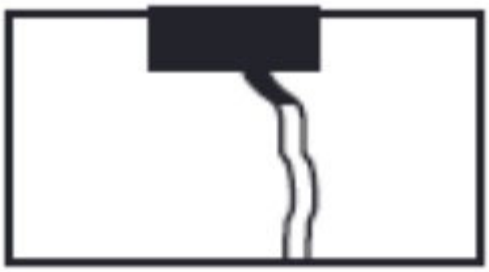
Overband (also referred to as “Band Aid”)	**Routed and Overband**
	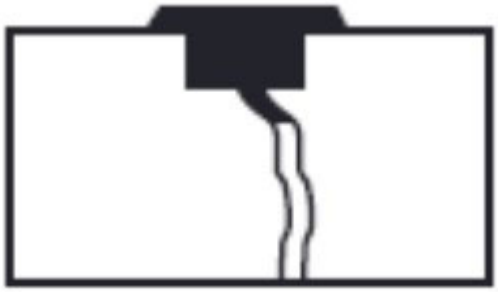

The finished level of Crack Seal or Crack Filler shall be flush to an 1/8” above the asphalt surface. Excess material shall be removed by the Contractor/Developer at the Contractor’s/Developer’s expense.

The Contractor/Developer shall apply the sealant material according to manufacturer’s recommendations with approval by the Engineer. The Contractor/Developer shall be solely

responsible for safety during all operations and making sure that the material is placed only in cracks with or without overband as shown above. Costs of damage, cleanup and/or material placed incorrectly shall be borne by the Contractor/Developer.

Traffic shall be kept off the sealant until it is sufficiently hard to not be picked up by traffic. Cooling of sealant can be accelerated using a commercial solution or water. Blotting with sand or paper is not acceptable.

QUALITY CONTROL REQUIREMENT CHECKLIST

Climatic Conditions:

- Surface temperature is at least 45°F and rising or per manufacturer's recommendations.
- No moisture, fog or dew is present.
- Early morning operations should be performed in direct sunlight.

Routing

- Cutting tips are sufficiently sharp to minimize spalling and cracking.
- Proper safety garments are worn (hard hat, reflective vest, long-sleeved shirt, pants, steel toed boots, safety goggles, and hearing protection).
- Guards and safety mechanisms on equipment work properly.
- Router follows cracks without difficulty.
- Routed cracks do not exhibit spalling.

Material Preparation

- Proper safety garments are worn (hard hat, reflective vest, long-sleeved shirt, pants, steel toed boots, safety goggles, and hearing protection).
- Heating oil in melter jacket is not fuming and level is adequate.
- Temperature gauge on the melter has been calibrated to the satisfaction of the AGENCY.
- If the temperature gauge has not been calibrated:
    - Measure sealant temperature with a thermometer.
    - Ensure that the reading on the thermometer is the same as the reading on the melter temperature gauge.
- Sealant is never heated above the manufacturer's recommended pouring temperature.
- Material safety data sheet (MSDS) is available on-site.

Cleaning of Cracks and Routs

- Proper safety garments are worn (hard hat, reflective vest, long-sleeved shirt, pants, steel toed boots, safety goggles, and hearing protection).
- A power sweeper or vacuum cleaner is being used to remove dirt and debris from the pavement surface.
- Compressor for high-pressure air provides at least 100 psi.
- Oil and moisture filters on compressor work properly.
- Temperature of the hot-air lance is below 930°F and the tip is 2 to 4 inches from the crack or rout.
- The cleanliness of the crack or rut is being checked every 30 minutes.
- The crack or rout is dry.
- No deicing chemical residue is present.

Sealant Application

- Hot-pour sealant is poured at the manufacturer's recommended temperature.
- The material is applied to the inside of the cracks.
- Ensure that sealant is placed up to the asphalt surface.
- There is sufficient sealant to allow for overband (if applicable). There are no bubbles due to moisture present.

Overbanding of Sealant (if applicable)

- Over band is not more than 3 inches wide.
- Over band is not more than 1/8 inch above the pavement surface.
- Over band is formed during, or immediately after, sealant application. Excess sealant is removed before hardening.

Sealant Protection

- Traffic is rerouted until sealant is set.

8.5.5 MEASUREMENT

Crack sealant shall be measured and paid by the ton completed in place and accepted. If routing is specified it will not be measured and paid separately but shall be included in the cost of material.

The Contractor/Developer shall measure and the inspector verify the following:

Before work starts each day:

- Amount of material in melter
- Number and weight of containers of material on site
- All containers are clearly marked with manufacturer's information.

At the end of work each day:

- Amount of material in melter.
- Number of containers of material not used.

The Contractor/Developer shall certify that material in the melter is per the specifications and has not been overheated.

Measurement will not begin before the Inspector arrives.

The inspector shall be given adequate notice if material is to be delivered during the workday and have the opportunity to verify quantity.

Counting or delivering boxes or lids shall not be an acceptable method of verifying quantity of material.

8.5.6 TESTING AND INSPECTION - GUIDANCE

When pulled vertically using a flattened sharp tipped ¼” rod bent at 90° the bond between the sealant and asphalt should be stronger than the sealant or the asphalt. Sealant or existing asphalt pavement should fail before the bond is broken.

ARTICLE 9

TRAFFIC CONTROL

9.1 GENERAL

9.1.1 DESCRIPTION

Traffic control shall conform to the ordinances and regulations of the City of Pueblo. Construction signing and marking shall conform to the Manual of Uniform Traffic Control Devices for Streets and Highways, U.S. Department of Transportation, latest edition and revisions thereto, City of Pueblo Supplement to MUTCD for Traffic Control for Street Construction Utility Work and Maintenance Operations and the State of Colorado Department of Highways Standard Specifications for Road and Bridge Construction (latest edition), Section 614, "Traffic Control Devices", and Section 713, "Traffic Control Materials".

9.2 SCOPE

This work shall consist of furnishing and maintaining in place all barricades, warning signs, lights, and other safety devices required to protect the work, divert traffic, and warn pedestrians of open excavations, unfilled trenches, and other areas or conditions which might be hazardous or dangerous during daylight or darkness.

Detours shall be maintained throughout the period of construction in such a manner as to provide the least amount of disruption to normal traffic flow.

The Contractor shall strictly adhere to all time limits and other restrictions as specified by the City Traffic Engineering Division in the approval of the Traffic Control Plan.

9.3 CONSTRUCTION STAGING

The contractor shall coordinate with the City Traffic Engineering Division to determine the site-specific staging and/or phasing requirements. The Contractor shall schedule the work in such a manner as to comply with the staging and/or phasing requirements contained in the contract documents.

9.4 CONSTRUCTION REQUIREMENTS

9.4.1 General

The Contractor shall maintain a 24 hour, 7 days a week (including weekends and holidays) emergency service to remove, install, relocate, and maintain warning devices. The Contractor shall furnish to the City the name and telephone number of the Traffic Control Supervisor responsible for emergency service.

In the event the Traffic Control Supervisor does not respond within 2 hours, or the City deems it necessary to call out other forces to accomplish emergency services, the Contractor will be held responsible for the cost of such emergency services, without reimbursement.

9.4.2 Existing Traffic Control Devices

Prior to commencing work in the vicinity of any existing Traffic Control Devices, the Contractor shall coordinate with the City Traffic Engineering Division in the removal of devices which need to be removed or relocated to accommodate the work. The Contractor shall store all devices in a safe and secure manner throughout the period of work and assume responsibility for temporary devices if necessary.

Upon completion of the work in the vicinity of the previously removed Traffic Control Devices, the Contractor shall reinstall the devices as directed by the City Traffic Engineering Division. Any Traffic Control Devices damaged during removal, relocation storage, or reinstallation shall be repaired or replaced by the Contractor, to City Standard, at their expense.

The removal relocations, storage, and reinstallation of existing devices shall not be paid for separately but shall be considered as incidental to the project.

9.4.3 Traffic Control Plans

9.4.3.1 Submittal

The Contractor shall submit Traffic Control Plans in drawing form for the review and approval by the City Traffic Engineering Division or project engineer. The Traffic Control Supervisor shall provide a night telephone number to assure 24-hour availability.

Traffic Control Plans for street closure and major detours of local and/or through traffic shall be submitted to the City Traffic Engineering Division or project engineer at least ten calendar days in advance of the closure or detouring.

Traffic Control Plans not involving closures or major detours shall be submitted a minimum of 72 hours (three City business days) prior to implementation.

No phase of construction shall commence until the Traffic Control Plan has been approved. Approved Traffic Control Plans shall not be revised without prior approval of the City Traffic Engineering Division or project engineer. Revisions shall be submitted in accordance with the above requirements.

9.4.3.2 Format

Traffic Control Plans shall include detailed signing, barricading, and traffic detouring information for each phase or stage of construction including as a minimum: type and number of devices, working hours, date(s), number and location of flaggers, and time restrictions, if any.

9.4.3.3 Copies of Approved Plan

Copies of the approved Traffic Control Plans shall be available on-site at all times; the Contractor shall provide copies to the Project Engineer, Traffic Engineer, and Project Inspector.

9.4.4 Traffic Control Supervisor

9.4.4.1 Qualifications

The Contractor shall designate a Traffic Control Supervisor who shall perform the Traffic Control Management and shall be responsible for maintaining all Traffic Control Devices in compliance with the approved Traffic Control Plan.

The Traffic Control Supervisor shall be either an employee of the Contractor, other than the Superintendent, or an employee of a firm which has a subcontract for the overall Traffic Control Management for the project. The Traffic Control Supervisor shall be currently certified by the American Traffic Safety Services Association or Colorado Contractors Association as a Worksite Traffic Control Supervisor.

The name and qualifications, including a current copy of the American Traffic Safety Services Association certification, of the Traffic Control Supervisor shall be submitted to the Engineer and the Engineer's approval shall be obtained prior to commencing construction. The Traffic Control Supervisor shall have an up-to-date copy of part VI of the Manual of Uniform Traffic Control Devices (and revisions thereof) and City of Pueblo Supplement to MUTCD for Traffic Control for Construction, Utility Work and Maintenance Operations available on-site at all times.

9.4.4.2 Duties

The Traffic Control Supervisor duties shall include, but not be limited to:

(a) Preparing, revising, and submitting the Traffic Control Plan as required.

(b) Direct supervision of project flaggers.

(c) Coordinating all Traffic Control operations, including those of subcontractors and suppliers.

(d) Coordinating project activities with appropriate police and fire control agencies.

(e) Maintaining a project Traffic Control diary which shall become a part of the project records.

(f) Inspecting Traffic Control Devices on every calendar day that Traffic Control Devices are in use. (By the Traffic Control Supervisor or his approved representative).

(g) Ensuring that Traffic Control Devices are functioning as required.

(h) Overseeing all requirements covered by the plans and specifications which contribute to the convenience, safety and orderly movement of traffic.

9.4.4.3 Working Hours

The Traffic Control Supervisor shall be available on a 24 hour per day basis. The Contractor shall make arrangements so that the Traffic Control Supervisor, or his representative as approved by the City, will be available on every working day and upon the request of the Engineer.

9.4.5 Flaggers/Off-Duty Police Officers

The City Traffic Engineering Division may require flaggers or off-duty police officers for traffic direction.

9.4.5.1 Qualifications

(a) All flagging personnel shall have completed the Colorado Department of Transportation minimum training requirements for flaggers within 2 years prior to beginning the project. Flaggers will be required to have a current American Traffic Safety Services Association certification card upon their person when engaged in any flagging operation.

(b) Off-duty police officers shall be active members of the City of Pueblo Police Department. The Contractor shall be responsible for contacting the Police Department and making all arrangements for off-duty officers.

9.4.6 Pedestrian Traffic Control

Throughout construction, the Contractor shall maintain pedestrian walkways along all public streets unless otherwise approved by the City Traffic Engineering Division. Said pedestrian walkways shall be a minimum of 4′ wide and shall be safely delineated. Pedestrian walkways shall be surfaced in a manner approved by the Engineer and shall be safely maintained and kept clear of all debris and obstructions (including tools, equipment, and materials). Unless otherwise specified in the contract documents, pedestrian walkways shall be supplied and maintained by the Contractor at his expense.

9.4.7 Access to Adjacent Properties

The Contractor shall notify all affected residents and/or property owners a minimum of 48-hours prior to restricting normal access from public streets to adjacent properties. The Contractor shall inform each resident and/or property owner of the nature of the access restriction, the approximate duration of the restriction, and the best alternate access route for that particular property. Any closure of access to or from adjacent property shall be submitted to the Engineer and approved prior to implementation.

9.4.8 Re-Opening to Traffic

Before reopening any portion of the public streets to vehicular traffic, the Contractor shall restore the pavement as required by the Plans and Specifications and in accordance with Section 19-5-2 of the City Code, "Excavations", shall reset all signs, and shall restore all pavement markings. If necessary, a temporary asphalt concrete surface and temporary pavement markings shall be installed by the Contractor at his expense.

Any signs damaged as a result of the Contractor's work shall be repaired or replaced to the requirements of the City Traffic Engineering Division; said repair or replacement shall be at the Contractor's expense.

9.5 MEASUREMENT AND PAYMENT

Work performed under this section shall be paid for by one of the following methods as specified in the contract documents:

9.5.1 Lump Sum Bid Item

When Traffic Control is shown as a Lump Sum item in the bid schedule, it shall be the responsibility of the Contractor to determine the Traffic Control needs for the project, including all devices and personnel, and to develop the bid amount accordingly. Payment shall be made as a percentage of the Traffic Control Lump Sum amount equal to the percent-complete-to-date of the balance of the total contract amount less any previous payments for Traffic Control. In no case shall the total amount paid for Traffic Control exceed the Lump Sum shown in the bid schedule.

9.5.2 Incidental to Project

When Traffic Control is not shown in the bid schedule as a separate item, the work shall not be paid for separately, but will be considered as incidental to the project.

{This Page Intentionally Left Blank}

ARTICLE 10

LANDSCAPING

10.1 DESCRIPTION

This work shall consist of furnishing and spreading fertilizers; soil preparation; furnishing and drilling or sowing seed; mulching the seeded areas; and placing blue grass sod in accordance with these specifications, accepted horticultural practice, and in reasonably close conformity with the locations and details shown on the plans or as designated.

For seeding in areas that don't have sprinklers or aren't irrigated , spring seeding is allowed from the **spring thaw to June 15th** and fall seeding is allowed from **September 1st until consistent ground freeze**. Seeding will be allowed between June 15th and September 1st only with irrigation or sprinkler systems being utilized.

Seeding accomplished outside the time periods listed above will be allowed only when ordered by the Landscape Architect or City Engineer or when the Contractor's request is approved in writing. When requested by the Contractor, the Contractor must agree to perform the following work at no cost to the City: (1) apply the specified seed and mulch at a rate of not less than 25 percent greater per unit area than the rates specified for use within the time periods listed above, (2) re-seed, re-mulch, and repair areas which fail to produce vegetation.

When seeding is ordered by the Landscape Architect or City Engineer outside the time periods listed above, the cost of additional material will be paid for by the City. The Contractor will not be responsible for failure of the seeded area to produce vegetation due to reasons beyond the control of the Contractor.

Sod shall be placed between **September 15 to October 15 and March 1 to April 15** of the calendar year or as otherwise approved by the Engineer.

Mulching may be accomplished by the crimping method using straw or hay, by the hydraulic method using wood cellulose fiber mulch or by other acceptable mulching methods approved by the Landscape Architect or City Engineer.

10.2 MATERIALS

10.2.1 SEED

(1) All seed shall be furnished in bags or containers clearly labeled to show the name and address of the supplier, the seed name, the lot number, net weight, origin, the percent of weed seed content, the guaranteed percentage of purity and germination, pounds of pure live seed (PLS) of each seed species and the total pounds of pure live seed in the container. All brands furnished shall be free from such noxious seeds as Russian or Canadian Thistle, European Bindweed, Johnson Grass and Leafy Spurge. The Contractor shall furnish to the Engineer a signed statement certifying that the seed furnished is from a lot that has been tested by a recognized laboratory for seed testing within six months prior to the date of delivery. Seed which has become wet, moldy, or otherwise damaged in transit or in storage will not be acceptable.

(2) The mixture shall consist of the following species and rates. Planting rates are expressed in terms of pure live seed (PLS).

(3) Turf Mix:

Species	Variety	LBS. PLS per 1,000 SF Drilled	LBS. PLS per 1,000 SF Broadcast
Turf Type Tall Fescue (*Festuca spp*.)		9.0	18.0
Kentucky Bluegrass (*P. pratensis*)		1.0	2.0
		10# PLS	20# PLS

*NOTE: This is a sample seed mix, refer to project specifications.

(4) Native Mix:

Species	Variety	LBS. PLS per Acre Drilled	LBS. PLS per Acre Broadcast
Blue grama (B. gracilis)	Lovington	0.4	0.8
Little bluestem (*S. scoparium*)	Pastura	1.2	2.4
Sideoats grama (B. *curtipendula*)	Butte or Vaughn		
Prairie sandreed (*C. longifolia*)	Goshen	1.1	2.2
Sand dropseed (*S. cryptandrus*)		0.1	0.1
Green needlegrass (N. *viridula*)		1.7	3.4
Streambank wheatgrass (*E. lanceolatus)*	Sodar	2.0	4.0
		8.1# PLS	16.1# PLS

*NOTE: This is a sample seed mix, refer to project specifications.

(5) Seed and seed labels shall conform to all current State and Federal regulations and will be subject to the testing provisions of the Association of Official Seed Analysis. Computations for quantity of seed required are based on the percentage of purity and percent of germination.

(6) If seed available on the market does not meet the minimum purity and germination percentages specified, the Contractor must compensate for a lesser percentage of purity of germination by furnishing sufficient additional seed to equal the specified product. Product comparison shall be made on the basis of pure live seed in pounds based on the information received from each seed bag. The formula used for determining the quantity of pure live seed (PLS) shall be: Pounds of Seed x (Purity x Germination) = Pounds of Pure Live Seed (PLS).

(7) Areas that are not irrigated or not provided with sprinkling or watering systems shall be seeded prior to May 15th in the Spring **or** following September 30th in the Fall.

(8) Seeding shall follow closely behind tilling the fertilizer or as directed by the Landscape Architect or City Engineer, to make special seed bed preparation unnecessary. The Landscape Architect or City Engineer may establish test sections for adjusting the seeding equipment to assure the specified rate. The Engineer may order equipment readjustment at any time.

(9) All slopes 2:1 and flatter shall be seeded by mechanical power drawn drills followed by packer wheels or drag chains. Mechanical power drawn drills shall have depth bands set to maintain a planting depth of at least one-quarter inch and shall be set to space the rows not more than seven inches (7”) apart. Seed that is extremely small shall be sown from a separate hopper adjusted to the proper rate of application.

(10) Seed shall not be drilled or sown during windy weather or when the ground is frozen or otherwise untillable.

(11) If inspections indicate that strips wider than the specified space between the rows planted have been left or other areas skipped, the Landscape Architect of City Engineer may require immediate resowing of the seed in such areas at the Contractor's expense.

(12) Unless otherwise noted on the plans, the Contractor shall be responsible for maintaining and watering areas seeded for a period of seven weeks after the time of seeding.

(13) Areas in which there is not a satisfactory stand (no bare areas larger than six (6) square inches) at the expiration of this seven-week period shall be reseeded. Watering of the seeded areas shall be carefully done in such a manner to avoid standing water, surface wash, or scour. Areas seeded and so maintained shall be protected against damage by vehicle and pedestrian traffic by the use of barriers and appropriate warning signs.

10.2.2 SOD

(1) Superior sod grown from certified, high quality seed of known origin or from plantings of certified grass seeds or stolons. Contractor shall submit to the Landscape Architect or City Engineer the name of the turf farm(s).

(2) Sod shall be true to type, quality cultured turf grass grown from seed approved by the US Department of Agriculture, free of diseases, clover, stones, pests and debris, and containing maximum of 2% of other grass species than variety specified; no more than two (2) broadleaf weeds or ten (10) annual weeds of weedy grasses per 50 square yards. Thickness of sod soil portion 1" maximum.

(3) Inspect sod to –

a. Assure satisfactory genetic identity and purity.
b. Assure over-all high quality and freedom from noxious weeds or an excessive amount of other crop and weedy plants at time of harvest.

(4) Sod shall be composed of the following approved seed mixtures:

Sod Blend		Supplier
KBG/Texas Mix		Southwest Farms
VorTEX		Korby Sod LLC
Graff's Texas Blue Grass Blend		Graff's Turf Farms
G & S Select		Bigfoot Turf

*NOTE: Sample seed mixture, refer to project specifications.

10.2.3 FERTILIZERS

(1) Fertilizer shall be delivered to the site, mixed as specified, in the original unopened standard size bags showing weight, analysis and name of manufacturer. Containers shall bear the manufacturer's guaranteed statement of analysis and shall be furnished to the Landscape Architect or City Engineer. Store fertilizer in a weatherproof place and in such a manner that it shall be kept dry and its effectiveness shall not be impaired.

(2) Superphosphate: Soluble mixture of treated minerals, 16% to 20% available phosphoric acid.

(3) Commercial Fertilizer: Complete fertilizer containing the following percentages of available plant nutrients:

a. Tablets: For trees and shrubs, provide tightly compressed long lasting, slow release tablets weighing 21 grams with an analysis of 20-10-5, and a potential acidity of not more than 5% by weight.
b. Granular: For lawns, vines, flowers and groundcovers, provide a granular, slow release, commercial fertilizer with NPK proportion of 3:1:2 with 120 days controlled release such as 24-4-10 50% duration and 3% iron.
c. Trees over 2" in caliber shall also receive: Install one 3 oz. packet of Mycor Tree Saver per one-inch diameter of tree trunk (i.e. 3 (3 oz.) packets per 3" B&B tree). Provide City Representative with 20 extra packets.

10.2.4 MULCH

(1) Hay mulch shall consist of clean field hay and shall not contain seeds of noxious weeds. Hay in such an advanced state of decomposition as to smother or retard the growth of grass will not be accepted. Hay which breaks in the crimping process rather than bending will not be accepted. The hay mulch shall have a minimum of 60% of the hay stubble 10" or longer upon completion of the crimping operation.

(2) After seeding has been completed, hay shall be uniformly applied at the rate of two tons per acre or as directed. It shall then be crimped in with a crimper or other approved equipment. After application, 60% of the crimped hay shall be 10" or longer. The Landscape Architect or City Engineer may order the employment of hand-crimping operations on such areas where excessive ground slopes or confined areas would

cause unsatisfactory crimping to result by mechanical methods. Crimping shall be performed on the contour. Crimping against the contour shall not be accepted.

(3) The seeded area shall be mulched and crimped within 24 hours after seeding. Areas not mulched and crimped within 24 hours after seeding must be reseeded with the specified seed mix at the Contractor's expense.

(4) Wood Cellulose Fiber for hydraulic mulching shall not contain any substance or factor which might inhibit germination or growth of grass seed. It shall be dyed an appropriate color to allow visual metering of its application. The wood cellulose fibers shall have the property of becoming evenly dispersed and suspended when agitated in water. When sprayed uniformly on the surface of the soil, the fiber shall form a blotter-like ground cover which readily absorbs water and allows infiltration to the underlying soil. Weight specifications from suppliers, and for all applications, shall refer only to air dry weight of the fiber, a standard equivalent to 10 percent moisture. The mulch material shall be supplied in packages having a gross weight not in excess of 100 pounds and shall be marked by the manufacturer to show the air-dry weight content. Suppliers shall certify that laboratory and field testing of their product has been accomplished, and that it meets all the foregoing requirements pertaining to wood cellulose fiber mulch.

(5) Cellulose wood fiber mulch shall be added after the proportionate quantities of water and other approved materials have been placed in the slurry tank. All ingredients shall be mixed to form a homogeneous slurry. Using the color of the mulch as a metering agent, the operator shall spray apply the slurry mixture uniformly over the designated seeded areas. Areas not properly mulched or areas damaged due to the Contractor's negligence, shall be repaired and remulched in an acceptable manner at the Contractor's expense. Mulch removed by circumstances beyond the Contractor's control shall be repaired and remulched as ordered. Payment for this corrective work, when ordered, shall be at the contract prices.

10.2.5 IMPORTED BACKFILL

(1) Fertile, loose, friable sandy loam or natural agriculture topsoil typical of locality and capable of sustaining vigorous plant growth; it shall be clean and free from toxic minerals, noxious weeds, rocks larger than two inch (2”) in any dimension, and other objectionable materials.

(2) Borrow Topsoil shall be tested by an approved laboratory for both a “Soil Sample Test” and a ” Paste Test” and provide the results to the Owner. If necessary, to bring the soil into a satisfactory condition for growing the plant material, the Contractor shall provide proposed recommendations on how the Contractor will amend the soil, at the Contractor’s expense.

(3) Acidity/alkalinity range - pH 6.0 to 8.0.

10.2.6 TOP SOIL

(1) Contractor is to provide topsoil mix that conforms to the following tolerances.

(2) Topsoil for all tree, shrub, and ground cover planting beds shall consist of the following:

a. 60% to 70% sand
b. 10% max. silt.
c. 10% max. clay.
d. minimum 12% organic matter
e. pH value of 5.0 to 6.0.
f. Drainage minimum of 3/4 inch/hr.

(3) Acceptable amendments include:

a. Composted organic wood and manure-based product with a carbon to nitrogen ratio between 15:1 and 30:1, with a pH of 5 to 6, salt content below 6 mmhos/cm. Other materials such as mushroom compost, etc. may be considered for approval.
b. Amendments shall be free of objectionable odor, and free from all viable weed seeds, finely shredded to pass 70% through a 1/4 inch mesh screen.

(4) Topsoil for all lawn and meadow areas shall consist of the following:

a. 60% to 80% round sand.
b. 10% max. silt.
c. 10% max. clay.
d. minimum 5% organic matter
e. pH value of 5.0 to 6.0.
f. Drainage minimum of 3/4 inch/hr.

(5) Sand:

a. River pump or screened quarry sand with a particle size breakdown as follows. Provide sieve analysis for approval.

Coarse Sand	15%
Medium Sand	65%
Fine Sand	20%

(6) Compost:

a. Well-decomposed, 2-year-old, organic wood and manure based product with a carbon to nitrogen ratio between 15:1 and 30:1, with a pH of 5 to 6, and a salt content below 6 mmhos/cm. Other materials such as a decomposed mushroom or vegetable matter of natural occurrence may be considered for approval. Sheep and peat is acceptable.
b. Shredded particle minimum size: 1/4 – 1/2 inch.

(7) Fertilizer:

a. Analysis and application rates in accordance with soil analysis results - Slow release type sulphur coated urea complete with micronutrients.

(8) Peat Moss: (Mountain peat moss is not acceptable for use on the project)

a. Derived from partially decomposed fibrous or cellular stems and leaves of species of Sphagnum Mosses.
b. Elastic and homogenous, brown in color.
c. Free of wood and deleterious material that could prohibit growth.
d. Shredded particle minimum size: 1/4".

(9) Drain gravel: 3/4" diameter clean round drain rock, free of fines.

10.2.7 ORGANIC SOIL AMENDMENT

(1) Organic soil amendment shall be a composted organic wood and manure-based product with a carbon to nitrogen ratio between 15:1 and 30:1, with a pH of 5.0 to 6.0, and a salt content below 6 mmhos/cm. Other materials such as a decomposed mushroom or vegetable matter of natural occurrence may be considered for approval.

(2) The organic soil amendment shall be free of objectionable odor, and free from all viable weed seeds, finely shredded to pass 70% through a 1/8-inch mesh.

(3) Compost steer manure or peat moss, “Nutril Mulch”, “Soil Pep”, nitrogen stablilized organic amendment (not sawdust), or other material approved by Owner.

10.2.8 NATURAL ROCK MATERIALS

(1) Boulders shall be selected and approved by the Landscape Architect or City Engineer. Type, size, and color shall be as directed by the City. Boulders shall be approved prior to delivery to the site.

(2) Boulders shall be clean, uniform in type, and free of abrasions, marks, drill holes, and all other deleterious marks.

10.2.9 BRICK PAVERS

(1) Brick pavers shall conform to ASTM C-902, SW grade, Class SX, Type 1. Water absorption shall not exceed 4%.

(2) Size: Wire-cut pavers to the dimensions shown on the drawings.

(3) Color shall be as specified on the drawings or by the Landscape Architect or City Engineer.

(4) Friction Factor: Permanent wet leather/wet paver factor of 0.5 minimum.

10.2.10 IRRIGATION

(1) General Piping

a. Pressure Supply Lines (downstream of backflow prevention units) – Sch. 40 PVC.
b. Non-pressure Lines - Class 200 PVC
c. PVC Sleeving – Sch. 40 PVC.
d. Drip Tubing – Toro Dura-Pol EHD 1645 3/4" with .050 inch wall thickness.
e. Emitter Tubing - As recommended by emitter manufacturer.

(2) Plastic Pipe and Fittings:

a. Identification Markings. Identify all pipe with following indelible markings.

i. Manufacturer's name. ii. Nominal pipe size. iii. Schedule of class. iv. Pressure rating.
v. NSF (National Sanitation Foundation) seal of approval.
vi. Date of extrusion.

(3) Solvent Weld Pipe. Manufactured from virgin polyvinyl chloride (PVC) compound in accordance with ASTM D2241 and ASTM D1784; cell classification 12454-B, Type 1, Grade 1.

a. Fittings - Standard Schedule 40, injection molded PVC; complying with ASTM D1784 and D2466, cell classification 12454-B.

i. Threads. Injection molded type (where required).
ii. Tees and ells
1. Threaded Nipples - ASTM D2464, Schedule 80 with molded threads.
2. Joint Cement and Primer - Type as recommended by the manufacturer of the pipe and fittings.

(4) Drip Irrigation Systems

a. Drip Tubing - Manufactured of flexible vinyl chloride compound conforming to ASTM D1248, Type 1, Class C, Category 4, P14 and ASTM D3350 for PE 122111C.
b. Fittings - Type and make recommended by the tubing manufacturer.
c. Drip Valve Assembly – type and size to be shown on the design submittal.

i. PR Filter - Plastic construction with 200 mesh (75 micron) nylon screen and 1/2 inch blow-out assembly. Pressure reduction is included in the filter.
ii. Control Valve - 2 way, solenoid pilot operated type made of synthetic, non-corrosive material; diaphragm activated and slow closing. Include freely pivoted seat seal; retained (mounted) without attachment to diaphragm.
d. Emitters –Single port, pressure compensating, press on type by Rainbird.

i. Use 2 emitters per shrub, 4 per tree, and 1 per flower or groundcover. See plant list for specific emitter size.
ii. Gallons per hour (GPH) as indicated on plans.

e. Landscape Dripline Tubing – Dual outlet ports, pressure compensating in-line emitter tubing, Rainbird LD-09-12.

(5) Gate Valves - Gate Valves for 3/4 inch through 2-1/2 Inch Pipe - Brass construction; solid wedge, IPS threads, and non-rising stem with wheel operating handle.

(6) Quick Coupling Valves - Brass two-piece body designed for working pressure of 150 PSI; operable with quick coupler. Equip the quick coupler with a locking rubber cover. Key size and type will be as shown on Drawing.

(7) Valve Boxes:

a. Gate Valves, Quick Coupling Valves, Drain Valves, Drip Line Blow-out Stubs, and Wire Stub Box - Carson Brooks #910-10, box as detailed.
b. 3/4 inch through 2 inch Control Valves - Carson Brooks #1419-12 box.
c. Drip Valve Assemblies - Carson Brooks #1220-12 box.

(8) Electrical Control Wiring:

a. Two Wire System
b. Low Voltage
c. Electrical Control Wire - American Wire Gauge (AWG) No. 14 solid copper, Type UF cable, which is UL approved for direct underground burial, if required to operate system as designed.

d. If multiple controllers are utilized, and wire paths of different controllers cross each other, both common and control wires from each controller shall be different colors approved by Landscape Architect or City Engineer.
e. Control Wire connections and splices shall be made with 3M direct bury splice, Rain Bird Pentite connectors, or a similar dry splice method.
f. Low Voltage – (2-Wire Decoder Cable)
    i. Electrical Control Wire - UFUL approved, Paige Wire P7072D 12/2 (or as per manufactures requirements, direct burial copper wire to operate the system as designed.
    ii. If multiple controllers are utilized, refer to the wire routing plan for individual wire runs. Each controller shall have a wire path of a different color.
    Refer to plan for any additional cable color requirements.
    iii. If multiple controllers are utilized, each controller shall have its own 2-wire decoder cable run, controllers cannot be connected with the same 2-wire run.
    iv. Loop five (5) feet minimum of 2-wire cable into all valve boxes.
    v. Control Wire connections and splices shall be made with 3M DBY or King 600 DBY/R, or similar, direct bury splice, or as required by the controller manufacturer.

g. High Voltage – Type required by local codes and ordinances, of proper size to accommodate the needs of the equipment serviced.

(9) Automatic Controller – Size and type as shown on drawings and details. Unless otherwise specified use Weathertrak brand.

(10) Hydrometer Master Control Valve/Flowmeter - Size and type shown on drawings per each system design.

(11) Electric Control Valves - Size and type shown on drawings, having manual flow adjustment (except drip valves) and manual bleed nut.

(12) Sprinkler Heads - As indicated on drawings; Fabricated riser units in accordance with details on drawings – with riser nipples of the same size as riser openings in the sprinkler body.

(13) Backflow Preventer - Size and type indicated on drawings; Brass construction with 150 psi working pressure.

10.2.11 EROSION MATTING

(1) The erosion matting shall be installed as shown on the drawings and as directed by the Landscape Architect or City Engineer. An additional row of blanket (approximately four feet wide) may also be required in areas of steep slopes, drainage paths or south exposures. The area to be covered shall be properly prepared, fertilized, and seeded before the blanket is applied.

(2) The product data for the erosion matting must be submitted to and approved by the Landscape Architect or City Engineer prior to installation.

(3) When the blanket is unrolled, the netting shall be on top and the fibers in contact with the soil over the entire area. In ditches, the blankets shall be applied in the direction of the flow of the water, butted snugly at ends and sides and stapled. On slopes, the blankets shall be applied either horizontally or vertically to the slope. Ends and sides shall be butted snugly and stapled.

(4) When two or more lengths of fabric are required to be installed side-by-side or end to end to cover an area, a common row of staples will be used on adjoining blankets.

Minimum Blanket Dimensions	
Width	4 feet min.
Length	180 feet min.
Roll Sizes	80 square yards
Approx. Weight	78 pounds per roll
Staples	11 gauge wire, “U” shaped with 2-inch crown and legs 8-inches in length, min.

(5) The erosion matting will be applied uniformly and completely over the designated area. Use four staples across at the start of each roll. When blankets are placed along side of each other, outer staples shall be placed so as to catch the edge of each roll. Staple in row, in two-foot intervals along the entire length of the roll, and place two staples centered on the blanket, halfway between each row.

(6) As a waterway liner, staple at two-foot intervals throughout the length of the roll. When using two or more blankets side-by-side in a water course, do not put the seam (edges of adjoining blanket) at the center of the water flow. Offset approximately six (6) inches to one (1) foot.

(7) The Contractor shall also be responsible for maintaining and caring for the blankets for a seven-week period. All blankets that are disturbed during this period will be replaced and/or restapled by the Contractor.

10.2.12 GEOTEXTILE FABRIC

Geotextile Fabric (Filter Fabric): Shall be Warren's Terrabond, Mirascape, DuPont Typar 3301 or an approved substitution.

10.2.13 PLANT INSTALLATION ACCESSORIES AND MATERIALS

(1) Ground Anchors at Tree Pits: Duckbill-type galvanized steel ground anchor/rootball system and cable assembly 68 RBK kit (for trees up to 3'' caliper) or 88 RBK kit (for trees up to 6'' caliper), by Foresight Products, Inc., (800) 325-5360, or accepted equal. Install per manufacturer's recommendations. Do not install on dry, cracked, crumbling or broken rootballs.

(2) Guying and Staking Material:

a. Guying Wire: 12-gauge galvanized steel wire. Cotton/Nylon Webbing Straps with Grommets as provided by Jeffco Enterprises, Inc., 6340 W. 56th Avenue, Arvada, CO 80002, (303)422-2722, or accepted substitute.

i. Size for Trees Up to 3-1/2" Caliper: 16" x 3".
ii. Straps: Tensile strength of 1,000 lbs. and heat sealed on ends. iii. Strap Color: Brown or Tan. iv. Grommets: Securely attached and minimum 1/4 inch from end of strap.

b. Tree Wrapping: Tree wrapping material shall be of first quality, 4-inch wide, bituminous impregnated tape, corrugated or crepe paper; brown in color, specifically manufactured for tree wrapping. The Contractor shall submit a sample for the City's approval a minimum of 3 weeks prior to delivery on site.

10.2.14 PRE-EMERGENT HERBICIDE

At Contractor's option, pre-emergent herbicide: Shall be "Pendulam Aqua Cap" as manufactured by BASF or approved substitution. Apply per the manufacturer's recommendations for weed control.

10.2.15 EMERGENT HERBICIDE

For all turf planting beds, provide Roundup (Glyphosate) as manufactured by Monsanto Company or an approved equal.

10.2.16 INSECTICIDE AND FUNGICIDE

(1) For all tree plantings, provide systemic insecticide, Merit 75 WP or an approved equal.

a. Systemic insecticide such as Merit 75 WP Brand or an approved equal shall be applied per the manufacturer's recommendation at the time of planting of trees and approved by the Landscape Architect. .
b. Trees: Install 1.0 to 1.4 level teaspoons per one-inch of trunk diameter (D.B.H., At Breast Height) Minimum (1) teaspoon per 2" caliper tree.
c. Shrubs: Install .7 to 1.4 level teaspoons per one-foot of height of shrub.
d. Method of application shall be soil injection or soil drench as per manufacturer's recommendation. Apply treatment with water and keep moist for 7 to 10 days. Insecticide and fungicide shall be approved by the Landscape Architect.

10.2.17 LANDSCAPE EDGER

Landscape edger shall be "Permaloc Cleanline" or equal, 3/16" x 5 ½" aluminum edger with aluminum stakes or pins for supports, factory painted dark green

10.2.18 INTEGRAL COLORED CONCRETE

(1) Refer to *Article 4 - Non-Structural Concrete* for the concrete mix requirements.

(2) Integrally colored concrete used on the project shall be Davis Color, as noted on plans, and installed per the manufacturer's specifications.

(3) Coloring pigment added must be determined by weight. Visual bag splitting will not be permitted.

(4) All aggregate materials must be supplied from the same source and must be nonreactive.

(5) Cement for the entire project must be supplied from the same source and must be the same type and brand.

(6) For each specified color, maintain the same weight ratio pigment to cement for all colored concrete that is placed.

(7) The curing and sealing compound for colored concrete shall be of the same manufacturer as the colored admixture, for use with integrally colored concrete, and shall conform to
ASTMC309.

10.2.19 PLANT MATERIALS

(1) Plant Quality:

a. Plants: First class representatives of specified species or variety or cultivar, in healthy condition with normal well developed branch and root systems, free of

all objectionable features, and in conformance with the requirements of AJCH, American Standard for Nursery Stock and Colorado State Nursery Act. Where standards may conflict, use the standard that requires the highest quality of performance.

i. Trees: Fully branched in proportion to width and height. Minimum acceptable sizes of plants measured before pruning with branches in normal position, shall conform to the measurements as specified in the plant list furnished. ii. Larger plants than specified may be used, if accepted, at no additional cost to the Landscape Architect.
iii. All plants must be a minimum of 2 years old.

b. Source: Plants grown in Hardiness Zones 2, 3, 4 and 5 only will be accepted. Plants shall be nursery grown. The term "nursery grown" includes native plants and imported plants that have been growing in a nursery for a minimum of one growing season. Trees and shrubs shall have been root-pruned during their growing period in the nursery in accordance with standard nursery practice.

i. Hardiness Zones: Defined in U.S. Department of Agriculture publications. ii. Grower's Certificates: Required when doubt exists as to origin of plant material.

c. Insects, Pests and Plant Diseases:

i. Trees and Shrubs: Healthy, free of diseases, insects, eggs, larvae, or parasites of objectionable or damaging nature. ii. Coniferous Trees: Spray at time of installation and periodically as required to exclude infestation until final acceptance.

d. Inspection: Subject to inspection and acceptance. Landscape Architect reserves right to reject at any time or place prior to final project acceptance, any and all materials and plants which in the Landscape Architect's opinion fail to meet these specification requirements. Inspection is primarily for quality; however, other requirements are not waived when visual inspection results in acceptance. Plants may be inspected where growing, but inspection at the growth site shall not preclude the right of rejection at the site.
e. Promptly remove rejected plants and other materials from the site.

(2) Plants Required: Species (botanical name), size, manner in which to be furnished and quantity required to complete the planting, are listed and indicated by symbol on the drawings.

a. In the event discrepancies occur between the quantities of plants indicated in the schedule and indicated by symbol on the drawings, plant quantities indicated by symbol on the drawing shall govern.

(3) Procurement: The entering of a proposal and execution of a contract will be construed as evidence that the Contractor has made successful procurement arrangements for the plant materials as specified.

(4) Substitutions: Substitutions will not be accepted, except with written permission of the Landscape Architect.

10.2.20 ROOT BARRIER

Root Barrier shall be Century Root Barrier, CR2420, as supplied by:

Century Products USA 1144
North Grove St.
Anaheim, CA 92806
Ph. 714-632-7083
Fax: 714-632-5470 www.centuryrootbarrier.com

10.3 EXECUTION

10.3.1 FINISH GRADING AND SITE PREPARATION

Preparation:

(1) Protection

a. Trees, shrubs, and other plants

i. Protect the trunks and roots of existing trees on site, which are intended to remain. Do not use heavy equipment within branch spread or within the dripline of the tree. Interfering branches may be removed only at the direction of the Landscape Architect or City Engineer. Protect other plants and features which are to remain. Do not expose or damage existing shrub or tree roots.

(2) During preliminary grading, dig out weeds from planting areas by their roots and remove from the site.

(3) Remove from the site rocks larger than 2 inches in size and foreign matter such as building rubble, wire, cans, sticks, concrete, etc., before placing topsoil.

Performance:

(1) Add necessary amendments and redistribute existing topsoil stored on site and provide additional borrow backfill material to bring the surface to within 1” below the finish walk or curb grades.

(2) Direct surface drainage in the manner indicated on drawings by molding the surface to facilitate the natural run-off of water. Fill low spots and pockets with topsoil and grade to drain properly.

10.3.2 ROCKWORK

General:

(1) Construct rockwork with natural rock, at locations shown on the drawings or as directed by the Landscape Architect or City Engineer.

(2) During installation, rockwork that does not meet the quality of the submittals or samples as determined by the Landscape Architect or City Engineer shall be removed by the Contractor and replaced at no additional cost to the City. Field modifications recommended by the Contractor and approved by the Landscape Architect or City Engineer shall be made without additional cost to the City.

Preparation, Layout, and Installation:

(1) Field verify the location for boulder placement prior to installation of boulders.

(2) Handle, hoist, anchor and otherwise place boulders in the location approved by the Landscape Architect.

(3) Boulders shall be installed with no more than 2/3 of the boulder height above grade.

(4) Boulders shall be placed so that the top of the boulder is no higher than 24” above the adjacent street elevation.

(5) Contractor shall assume responsibility for the proper alignment of completed work.

Defective Materials and Rockwork:

(1) Rockwork shall be considered defective if not constructed or placed in accordance with the requirements of the drawings and specifications as determined by the Architect. Natural boulders must be held securely in a permanent position.

(2) Defective rockwork shall be removed and replaced with new rockwork acceptable to the Landscape Architect or City Engineer, unless suitable correction of defects may be otherwise accomplished as authorized by the Landscape Architect or City Engineer, and without additional cost to the City.

10.3.3 BRICK PAVING

Examination:

(1) Verification of Conditions:

a. Notify Landscape Architect or City Engineer of any discovered conflicts and discrepancies on the drawings with the conditions on the site which would prevent the proper installation of brick work.
b. Review the site and verify that other trades have completed their work and that the site is acceptable to receive the brick work.

Preparation:

(1) Controls: Lay brick work plumb and true to line and grade as indicated on the drawings and in accordance with approved standards for brick paving construction. Plan for proper drainage on brick paving surfaces.

(2) Brick on Sand Base: For subgrade preparation, see *Section 02310 - Finish Grading and Section 02315 - Excavating, Backfilling and Compacting.*

(3) Cleaning: Clean brick before setting by thoroughly scrubbing with fiber brushes and follow with a thorough drenching with clean water. Use only mild cleaning compounds containing no caustic or harsh fillers or abrasives.

(4) Setting Bed/Surface: Thoroughly clean up, sweep, brush down and scrub as required to generate an optimum substrate for accepting the brick work.

Installation of Brick on Sand Base:

(1) Soil Sterilant: Apply solution over the entire area to be paved in accordance with the manufacturer's latest printed instructions.

(2) Sand Base: Place the sand base to the thickness indicated on the drawings and thoroughly compact.

(3) Setting: Set pavers in the patterns indicated on the drawings.

(4) Joints: Set pavers snugly together with tight joints; tamp in place maintaining true line and grade.

(5) Sand Topping: Sweep the joints full of sand. Sweep excess sand from the bricks and remove.

Tolerances:

(1) Do not permit finished paving surfaces to vary more than 1/4 in. measured with a 10 ft. metal straightedge, except at grade changes.

(2) No "birdbaths" or other surface irregularities will be permitted. Correct irregularities to the satisfaction of the Landscape Architect.

10.3.4 IRRIGATION

(1) Coordination with City Parks Department - The contractor shall meet and coordinate with the appropriate City Parks Department supervisor for the new, replaced or repaired irrigation system as associated with this project and the plans and specifications.

(2) Landscape Plan Review and Coordination - Contractor will be held responsible for coordination between landscape and the irrigation system installation. Landscape

material locations shown on the Landscape Plan shall take precedence over the irrigation system equipment locations. If the irrigation equipment is installed in conflict with the landscape material locations shown on the Landscape Plan, the Contractor will be required to relocate the irrigation equipment, as necessary, at Contractor's expense.

(3) Static Pressure Verification - Contractor shall field verify the static pressure at the project site, prior to commencing work or ordering irrigation materials, and submit findings, in writing, to the Landscape Architect. If Contractor fails to verify static water pressure prior to commencing work or ordering irrigation materials, Contractor shall assume responsibility for all costs required to make the system operational and the costs required to replace any damaged landscape material. Damage shall include all required material costs, design costs and plant replacement costs.

(4) Inspection – Examine areas and conditions under which the Work of this Section is to be performed. Do not proceed with Work until unsatisfactory conditions have been corrected. Grading operations, with the exception of final grading, shall be completed and approved by the Landscape Architect or City Engineer before staking or installation of any irrigation system begins.

(5) Preparation

a. Staking shall Occur as Follows:

Mark, with powdered lime, the routing of the pressure supply line and flag heads for first few zones. Contact the Landscape Architect 48 hours in advance and request a review of the staking. Landscape Architect will advise installer as to the amount of staking to be prepared. Landscape Architect will review staking and direct changes if required. Review does not relieve the installer from coverage problems due to the improper placement of heads after staking.
ii. If the Project has significant topography, freeform planting beds, or other amenities that could require alteration of irrigation equipment layout as deemed necessary by the Landscape Architect, do not install irrigation equipment in these areas until the Landscape Architect has approved equipment staking.

b. Install sleeving under asphalt paving and concrete walks, prior to concreting and paving operations, to accommodate piping and wiring. Compact backfill around the sleeves to 95% Modified Proctor Density within 2% of optimum moisture content in accordance with ASTM D1557.

c. Trenching – Trench excavation shall follow, as much as possible, the layout shown on the drawing. Dig trenches straight and support the pipe continuously on the bottom of trench. The trench bottom shall be clean and smooth with all rock and organic debris removed.

d. Clearances

i. Piping 3 Inches and Larger - Make trenches of sufficient width (14 inches minimum) to properly assemble and position pipe in the

trench. The minimum clearance of piping 3 inches or larger shall be 5 inches horizontally on both sides of the trench. ii. Piping Smaller than 3 Inches - Trenches shall have a minimum width of 7 inches.

ii. Line Clearance - Provide not less than 6 inches of clearance between each line, and not less than 12 inches of clearance between the lines of other trades.

e. Pipe and Wire Depth:

iii. Pressure Supply Piping – 24 inches from top of pipe.

iv. PVC Sleeving – 18 inches from top of pipe. iii. Non-pressure Piping (rotor) - 18 inches from top of pipe. iv. Non-pressure Piping (pop-up) - 18 inches from top of pipe.

v. Control Wiring – Located below pressure main.

vi. Drip Tubing - 2 inches from top of pipe.

vii. Emitter Tubing (Micro-tubing) – Surface installation under fabric.

f. Boring will be permitted only where the pipe must pass under obstruction(s) which cannot be removed. In backfilling bore, the final density of backfill shall match that of the surrounding soil. It is acceptable to use sleeves of suitable diameter installed first by jacking or boring, and pipe laid through the sleeves. Observe the same precautions as though pipe were installed in an open trench.

g. Vibratory Plow - Non-pressure piping may be installed through the use of the vibratory plow method if the Landscape Architect determines soil conditions are satisfactory for this method of installation. Vibratory plowing does not relieve the installer of observing minimum pipe depths.

(6) Installation - Locate other equipment as near as possible to the locations designated. Deviations shall be reviewed by the Landscape Architect prior to installation.

a. PVC Piping

i. Snake the pipe in the trench as much as possible to allow for expansion and contraction.

ii. Do not install pipe when the air temperature is below 40° F.

iii. Place manual drain valves at low points and dead ends of pressure supply piping to ensure complete drainage of the system.

iv. When pipe laying is not in progress, or at end of each day, close pipe ends with a tight plug or cap.

v. Perform Work in accordance with good practices prevailing in piping trades.

1. Solvent Weld PVC Pipe - Lay pipe and make all plastic-to-plastic joints in accordance with the manufacturer's recommendations.

b. Drip Tubing

i. Make all fitting connections as per manufacturers recommendations.

ii. Use only a manufacturer provided or recommended hole punch when making penetrations in drip tubing for insert fittings. Use of any other

hole punch shall be cause for immediate removal and replacement of all installed drip tubing.

iii. Install drip line blow-out stubs at all dead ends of drip tubing.

c. Control Wiring

i. Low Voltage Wiring– 2-Wire:

1. Bury control wiring between the controller and electric valves in pressure supply line trenches, strung as close as possible to the main pipe lines with such wires to be consistently located below and to one side of the pipe, or in separate trenches.
2. Provide an expansion loop at every pressure pipe angle fitting, every electric control valve location (in valve box), and every 500 feet. Include a minimum of 5 feet in every valve box, 2 feet at every angle fitting and 10 feet at every future phase line.
3. Make all splices and E.C.V. connections using 3M DBY-6, King 600 DBR/Y connectors, or a similar dry splice method.
4. Install all control wire splices not occurring at the control valve in a separate splice valve box.
5. Install one decoder for each control valve or as indicated on the plans.
6. The wire paths shall be sized per distance requirements or as shown on the plan. The two-wire decoder cable shall be of the type indicated on the plans or per manufacturer recommendation.
7. The two-wire paths may be spliced, or “teed”, permitting extensions of the path in multiple directions. In general, the distance from the controller to the end of any one end of a “tee” or wire run shall not exceed the maximum for the gauge of any wire, even if the total of all wires exceeds that number. All wire splices must be made in a valve box with DBR-6 or equal direct-burial waterproof connectors.
8. Grounding of decoders and decoder wire shall occur every 500' of wire or every 8TH decoder and at all ends of 2-wire decoder cable run.
9. Grounding shall occur at right angles to the wire path and shall have an impedance of 10 Ohms or less, or shall meet the standards of the Earth Grounding Guidelines by ASIC.
10. Where the limits of work consist of narrow areas that make grounding rods installed at right angles a hardship, contractor shall utilize grounding plates installed at a minimum distance of 4’ offset and parallel to the wire path. Avoid installing grounding near other electrical equipment.

ii. High Voltage Wiring for Automatic Controller:

1. Provide 120 volt power connection to an automatic controller.
2. All electric work shall conform to local codes, ordinances, and authorities having jurisdiction. All high voltage electrical work shall be performed by a licensed electrician.

d. Automatic Controller

i. Install the controller in accordance with the manufacturer's instructions as detailed and where shown on the drawings. ii. Connect remote control valves to the controller in numerical sequence as shown on drawings.

ii. Final location of the controller shall be approved by the Landscape Architect prior to installation.

iii. Each controller shall have a dedicated, separate, ground wire and grounding rod as detailed.

iv. All above ground conduit shall be rigid galvanized with appropriate fittings. vi. All below ground conduit shall be schedule 40 PVC.

e. Hydrometer Master Control Valve/Flowmeter

i. Install the cross-handle 3 inches below finished grade as shown on drawings as detailed.

ii. When grouped together, allow at least 12 inches between valve box sides.

iii. Install each remote-control valve in a separate valve box.

iv. Install each individual valve box flush with the grade.

f. Isolation Control Valve

i. All control valves shall be a threaded union.

ii. A PVC ball valve shall be installed upstream of the control valve.

g. Electric Control Valves

i. All control valves shall be a threaded union.

ii. Install the cross-handle 3 inches below the finished grade where shown on the drawings as detailed.

iii. When grouped together, allow at least 12 inches between valve box sides.

iv. Install each remote-control valve in a separate valve box.

v. Install each individual valve box flush with grade.

h. Quick Coupling Valves

i. Install quick couplers on double swing-joint assemblies of Schedule 80 PVC pipe; plumb and flush to grade.

ii. Angled nipple relative to pressure supply line shall be no more than 45 degrees and no less than 10 degrees.

iii. Install quick coupling valves as detailed.

i. Drip Valve Assemblies

i. Install drip valve assembly as detailed.

j. Drip Emitters

i. Stake all surface emitters as detailed and with acceptable tubing stakes.

k. Drain Valves

i. Install manual drain valves at all low points in the pressure supply line as detailed.
ii. Provide a three cubic foot drainage sump for each drain valve installed.

l. Valve Boxes

i. Install one valve box for each type of valve installed as detailed.
ii. Valve box extensions are not acceptable except for master valves. Install gravel sump after compaction of all trenches.
iii. Place the final portion of gravel inside the valve box after the valve box is backfilled and compacted.
iv. Brand the controller letter and station number on the lid of each valve box. Letter and number size shall be no smaller than 1 inch and no greater in size than 1 1/2 inches. Depth of the branding shall be no more than 1/8 inch into the valve box lid.

m. Gate Valves

i. Install where shown on the drawings as detailed.

n. Sprinkler Heads

i. Install sprinkler heads where designated on the drawings or where staked. Set to finish grade as detailed.
ii. Spacing of heads shall not exceed the maximum length indicated on the drawing unless re-staked as directed by the Landscape Architect. In no case shall the spacing exceed the maximum recommended length by the manufacturer.
iii. Install heads on double swing-joint risers of schedule 40 PVC pipe. An angled nipple relative to a non-pressure line shall be no more than 45 degrees or less than 10 degrees.
iv. Adjust partial circle heads for proper coverage.
v. Adjust heads to the correct height after sod is installed.
vi. Plant placement shall not interfere with intended sprinkler head coverage, piping, or other equipment.
vii. The Landscape Architect may request nozzle changes or adjustments without additional cost to the Owner.

o. Backflow Preventer

i. Install where shown on the drawings as detailed.

p. Backfilling

i. Do not begin backfilling operations until the required system tests have been completed. Backfilling shall not be done in freezing weather except with the approval of the Landscape Architect. ii. Leave trenches slightly mounded to allow for settlement after backfilling is completed. Trenches shall be finish graded prior to walk-through of system by the Landscape Architect.

iii. Materials

1. Excavated material is generally considered satisfactory for backfill purposes.
2. Backfill material shall be free of rubbish, vegetable matter, frozen materials, and stones larger than 1 inch in any dimension.
3. Do not mix subsoil with topsoil.
4. Material not suitable for backfill shall be hauled away. Contractor shall be responsible for providing suitable backfill if the excavated material is unacceptable or not sufficient to meet the backfill, compaction, and final grade requirements.

iv. Do not leave trenches open for a period of more than 48 hours. Open excavations shall be protected in accordance with OSHA regulations.

v. Compact backfill to 90% maximum density, determined in accordance with ASTM D1557 utilizing the following methods:

1. Mechanical tamping.
2. Puddling or ponding. Puddling or ponding and/or jetting is prohibited within 20'-0" of building or foundation walls.

q. Piping Under Paving

i. Provide for a minimum cover of 18 inches between the top of the pipe and the bottom of the aggregate base for all pressure and non-pressure piping installed under asphaltic concrete or concrete paving. ii. Piping located under areas where asphalt or concrete paving will be installed shall be bedded with sand (a layer 6" below pipe and 6" above pipe).

iii. Compact backfill material in 6" lifts at 90% maximum density determined in accordance with ASTM D1557 using manual or mechanical tamping devices.

iv. Set in place, cap, and pressure test all piping under paving, in presence of the Landscape Architect prior to backfilling and paving operations.

v. Piping under existing walks or concrete pavement shall be done by jacking, boring, or hydraulic driving, but where cutting or breaking of walks and/or concrete is necessary, it shall be done and replaced at no cost to the City. Obtain permission to cut or break walks and/or concrete from the Landscape Architect.

r. Water Supply and Point of Connection

i. Water supply shall be extended as shown from the water main.

(7) Field Quality Control

a. Flushing - After piping, risers, and valves are in place and connected, but prior to installation of sprinkler heads, quick coupler assemblies, and hose valves,

thoroughly flush the piping system under a full head of water pressure from dead end fittings. Maintain flushing for 5 minutes through the furthermost valves. Cap all risers after flushing.

b. Testing - Conduct tests in the presence of the Landscape Architect. Arrange for presence of the Landscape Architect 48 hours in advance of testing. Supply a hydrostatic pump and all other test equipment.

i. Prior to backfilling, and after the installation of all control valves, fill the pressure supply line with water, and pressurize to 40 PSI over the designated static pressure or 120 PSI, whichever is greater, for a period of 24 hours (24 hour test). ii. Leakage, Pressure Loss - Test is acceptable if no loss of pressure is evident during the test period.
ii. Leaks - Detect and repair leaks.
iii. Retest system until test pressure can be maintained for the duration of the test.
iv. Before final acceptance, pressure supply line shall remain under pressure for a period of 48 hours.

(8) Adjusting - Upon completion of installation, "fine-tune" the entire system by regulating valves, adjusting patterns and break-up arms, and setting pressure reducing valves at pro-per and similar pressure to provide optimum and efficient coverage. Flush and adjust all sprinkler heads for optimum performance and to prevent overspray onto walks, roadways, and buildings as much as possible. Heads of same type shall be operating at the same pressure +/- 7%.

a. If it is determined that irrigation adjustments will provide proper coverage, and improved water distribution as determined by the Landscape Architect, contractor shall make such adjustments prior to Final Acceptance, as directed, at no additional cost to the City. Adjustments may also include changes in nozzle sizes, degrees of arc, and control valve throttling.
b. All sprinkler heads shall be set perpendicular to the finish grade unless otherwise designated.
c. Areas which do not conform to designated operation requirements due to unauthorized changes or poor installation practices shall be immediately corrected at no additional cost to the City.

(9) Cleaning – Maintain a continuous cleaning operation throughout the duration of work. Dispose of, off-site at no additional cost to the City, all trash or debris generated by the installation of the irrigation system.

(10) Maintenance

a. Furnish the following maintenance items to the City prior to final Acceptance:

i. 2 Sets of special tools required for removing, disassembling, and adjusting each type of sprinkler head and valve supplied on this Project.
ii. 2 six foot valve keys for the operation of gate valves or stop and waste valves (if applicable).

iii. 2 keys for each automatic controller, if applicable. iv. 2 quick coupler keys and 2 matching hose swivels for each type of quick coupling valve installed, if applicable.

v. Aluminum drain valve keys of sufficient length for the operation of drain valves, if applicable.

10.3.5 PLANTING AND LANDSCAPING

(1) Layout and Identification

a. The Contractor shall locate and stake all tree and shrub locations and sod limits according to the locations shown on the plans. All planting locations shall be observed and approved by the Landscape Architect, prior to planting operations. The Contractor shall make minor modifications in planting locations as directed by the Landscape Architect.

(2) Plant Protection and Delivery

a. All plant material shall be protected from the time of digging, to the time of final acceptance from injury, excessive drying winds, improper ventilation, overwatering, freezing, high temperatures, or any other condition damaging to the plant. Any plants showing evidence of poor care, or which are molded, mildewed, wilted or dried out shall be rejected.

b. Plant material shall be planted on the day of delivery or shall be placed in a temporary nursery, kept moist, shaded and protected from sun and wind. If balled and burlapped plants are not planted on the day of delivery, they shall be heeled in immediately in the temporary nursery, kept moist and protected with damp soil, moss, or other acceptable material to the full height of the root ball.

c. Plants shall not be bound with wire or rope that may damage the bark or break branches. Plants shall be lifted and handled from bottom of ball or container. Plants with balls loose, cracked or broken, man-made, or completely dry or plants with trunks loose in the ball before or during planting operations shall not be accepted and shall be removed from the site at the Contractor's expense within 24 hours.

(3) Excavation of Planting Pit

a. All plant pits shall be centered on the location stake, and shall be excavated in a saucer shape with sloped/tapered sides and a flat bottom. The depth of the plant pit shall be measured from the finish grade of the soil, not mulch, and as detailed in the contract drawings. The base of all soil balls shall be placed on compacted backfill fill.

b. Trees: The diameter of all tree pits shall be a minimum of 3X larger than the diameter of the ball or spread of the roots or as specified in the details drawings. Remove wire baskets, bundling cords, and the top 2/3 of burlap from the trees. Except for trees planted on slopes, the top surface of all root balls shall be slightly above the adjacent finished grade. It is important not to place tree balls too low.

c. Shrubs: The diameter of all shrub pits shall be a minimum of twice the diameter of the ball or spread of roots. The base of all soil balls shall be placed on compacted backfill fill.
d. Vines and Ground Covers and Perennials: The diameter of all vine and ground cover pits shall be 6 inches greater than the spread of roots.

(4) Plant Installation Procedures

a. Planting and Staking

i. Plants shall be set in the center of the pit on compacted backfill mix. Immediately after setting the plant in the pit, all non-biodegradable materials shall be completely removed from the ball and trunk, including but not limited to plastic, metal, wire, wood, cardboard, paper, fiber, treated burlap and twine. The only exception shall be the bottoms (not sides) of fiber pots. Plant handling shall be done in such a manner as not to injure the plant root system, disturb the soil ball or in any way cause harm or stress to the plant. If the root system of a container-grown plant has become container-bound, the roots shall be gently vertically cut on four sides of the root ball prior to planting.

ii. All plants shall be placed and kept plumb and straight as the pit is filled with backfill mix. Contractor shall adjust any plant which is not perfectly upright to a plumb position prior to acceptance. . Trees and shrubs in non-irrigated areas are to have saucers built around them at the drip lines.

iii. Plant trees and shrubs with the root flare of the plant at grade level. After placing the tree in the pit, the hole around the plant root system shall be halfway backfilled with specified mix and any large air pockets removed by hand with the blunt, handle end of a shovel or other such hand tool. If the Landscape Archirect determines that the ball is excessively dry, the Contractor shall then inset a deep watering device into the ball at a 45degree angle every 8 inches for one minute. The pit shall then be completely filled with backfill mix and tamped again with the shovel. No mechanical compaction shall be allowed. The pit shall then be watered by thoroughly saturating the backfill with water to a minimum of 3 feet surface dimension. No watering shall be done prior to this time. Watering shall be repeated once when all free water has disappeared. The second watering shall not be completed if the sub grade around the pit is already moist. After the second watering, the Contractor shall add the specified mulch. All surplus soil and debris shall be removed by the Contractor. The Contractor shall stake and guy trees immediately after planting according to standard detail.

iv. For trees in grass and planting beds, the Contractor shall drive stakes 3 feet vertically into firm soil outside the plant pit. The Contractor shall run wire up to the tree trunk and through the nylon webbing wrapped around the tree at approximately ½ the height of the tree. Webbing and wire attachment between stake and tree shall be

adjusted so the straps are under just enough tension to avoid visible sag in the lines. Rigid guying shall be accepted.

v. Contractor shall place stakes according to the construction detail. The Contractor shall return to the site and remove stakes one year from planting.

b. Wrapping, Pruning, and Mulching

i. Wrapping - Trees shall be wrapped with two layers of crinkled paper cemented together with bituminous material, four-inches (4") wide minimum, with a stretch factor of thirty-three percent (33%).
ii. Pruning – Prune only damaged or dead branches as directed by the Project Manager.
iii. Mulch –
1. Trees: Create a forty-eight-inch (48") diameter by four inch (4") high formed soil berm around the tree and fill with four-inch (4") deep specified wood mulch. Mulch shall be kept four to six inches (4"-6") away from tree trunk.
2. Shrubs: Mulch backfilled surfaces of pits, planting beds areas, and other areas indicated or as directed by the Project Manager. Apply four-inch (4") thick layer of mulch and finish level with adjacent finish grades. Do not place mulch against the stems of plants.

c. Backfill for Trees and Shrubs

i. Organic Soil Amendment: 33% volume of backfill.
ii. Planting Pit excavated material: 67% volume of backfill.
iii. Fertilizer Tablets: One 21 gram fertilizer tablet for each ½" of tree trunk caliper and one tablet per 12 inches height, or spread (whichever is greater) for each shrub.
iv. Insecticide: Trees: Install 1.0 to 1.4 level teaspoons per one-inch of trunk diameter (D.B.H., At Breast Height); Minimum (1) teaspoon per 2" caliper tree. Shrubs: Install 0.7 to 1.4 level teaspoons per one-foot of height of shrub.

(5) Soil Preparation

a. Soil preparation and mulching for all landscape areas, including seed and sod:

i. Finish grading shall be performed to fill in erosion gullies on slopes identified on the drawings. Where the use of large machinery is difficult, finished grade shall be worked with smaller equipment or by hand.
ii. Remove all rubble, stone and extraneous material over two (2) inches in diameter from the site.
iii. For planting areas, apply "Roundup" or equal short-term herbicide to inhibit unwanted plant growth prior to seeding. Apply in accordance with the manufacturer's recommendation for this purpose and sufficiently in advance of planting to avoid damage to new plants and grass.

iv. Spread approved topsoil and the following amendments to the areas specified on the drawings. Do not rototill or disk topsoil dressing. Seeding to follow within 7 days of topsoil application.
    1. Organic Soil Amendment: Apply 3 cubic yards per 1,000 square feet.
    2. Commercial Fertilizer (18-46-0): Apply 15 lbs of available Nitrogen per 1,000 square feet.
    3. Substantiate quantities with delivery tickets and empty manufacturer bags on a daily basis to the City.

v. Refine grade to restore smooth even finish grades and to ensure positive surface drainage. No planting shall take place until the Landscape Architect accepts the final grade.

vi. Moisten prepared sod/seed areas before planting if the soil is dry. Water thoroughly and allow the surface moisture to dry before planting lawns. Do not create a muddy soil condition.

vii. Apply mulch a minimum of 4-inches thick to completely cover the root ball.

(6) Installation of Landscape Edger

a. Contractor shall install edging per the manufacturer's recommendation. Edging shall be installed between all plant beds and sod/seeded area, or as shown on the plans.

(7) Schedule

a. No planting work shall take place during freezing or excessively windy or wet weather or when the ground conditions are, in the opinion of the Landscape Architect, not in a condition to be properly worked. Contractor shall include time in their schedule for work stoppage due to inclement weather or ground conditions. Inclement weather or ground conditions shall not be a cause for an extension of the project completion date unless written approval has been obtained from the City for extension of the project completion date.

b. No planting work shall commence until the adjacent site improvements, pavements, utility installation and finish grading are completed. The Contractor shall limit their use of heavy equipment on pavement and planted areas. In all cases, the Contractor shall be responsible for all damage to existing conditions.

(8) Maintenance, Acceptance, and Guarantee

a. Maintenance period shall begin immediately after each area is planted based on the following requirements:

i. All plants shall be protected and maintained until final acceptance of all work. Maintenance shall include mowing, watering, weeding, cultivating, mulching, tightening and repairing of guys, adjusting metal edging, the removal of dead branches, resetting plants to proper grade or upright position, barricading the site and any other necessary operations. The Contractor shall provide all water and equipment necessary for maintenance throughout the duration of the contract.

Water is available at the planting site. After final acceptance, maintenance becomes the responsibility of the City.

ii. If during the duration of the contract period, but prior to final acceptance, any of the plants die or if they are, in the opinion of the Landscape Architect , in an unhealthy or unsightly condition or if they have lost their natural shape due to dead branches or excessive pruning of branches, then the Contractor shall replace the material at the Contractor's expense. This replacement shall be completed prior to final acceptance of the project and shall not void the two-year guarantee.

b. Prior to final acceptance, the Contractor shall furnish four (4) copies of written maintenance instructions to the City for the maintenance and care of all new planted areas for the initial three (3) years after installation. These instructions shall include but not be limited to staking, pruning, insect and disease control and fertilizing.

c. Guarantee:

i. For a period of two (2) years after final acceptance of all work and at no additional cost to the City, the Contractor shall replace any plants that have died, or are partially dead, if they are in the opinion of the Landscape Architect, in an unhealthy or unsightly condition, or they have lost their natural shape due to dead branches or excessive pruning of dead branches. Inadequate or improper maintenance by the City shall not be cause for replacement by the Contractor provided the Contractor shall have submitted throughout the guarantee period a bi-weekly letter of report to the City on improper or inadequate maintenance practices and recommended remedial actions. The Contractor shall apply a "new" two-year guarantee period to each replacement plant that is installed.

ii. The Contractor shall guarantee all plants to be true to name and to meet all conditions of these specifications. Any plant which is not true to name as indicated by leaf, flower form, or fruiting characteristics revealed within the guaranteed period shall be replaced by the Contractor at the Contractor's expense.

iii. All replacement planting under the guarantee provision shall be executed within one month of notice to replace such plants. Upon the Landscape Architect's written approval, the Contractor shall replace rejected plants at a later date, mutually agreed upon, provided that the Contractor removes all rejected plants within seven (7) days of the notice to replace such plants. If the rejected plants are not removed in seven (7) days, the City may at their option remove these plants and the cost of the removal shall be charged to the Contractor.

iv. Replacement planting is to be in accordance with the original specifications and its cost considered to be included in the bid price. All areas damaged by tree or shrub planting or replacement operations are to be fully restored to their original conditions as specified.

10.3.6 TOPSOIL

(1) Preparation of Subgrade

a. Grade soil, eliminating uneven areas and low spots, ensuring positive drainage towards the storm drains. Remove soil that is contaminated with toxic materials or has materials detrimental to growth such as asphalt, concrete and debris which has contaminated the subgrade soil. Dispose of removed materials legally off site. If hazardous materials are discovered notify the City immediately.

b. Cultivate the area subsoil that is to receive topsoil to a depth of 12" in all areas, especially in those areas where equipment used for hauling and spreading has compacted the soil. A no-till drill will execute the seeding of the site; A minimum disturbance is required. Additional cultivation of disturbed or compacted areas shall be at the cost of the contractor.

c. Remove surface debris, roots, vegetation, branches and stones in excess of 3” diameter.

(2) Spreading of Soil Mixture

a. Coordinate efforts with other trades. Under no circumstances is the soil mixture to be spread if other trades have not completed their work; this could contaminate or compact the installed soil mixture.

b. Spread soil after the Landscape Architect has inspected and provided written approval of the subgrade preparation in terms of slope, scarification and depths. Do not spread soil in a frozen or saturated condition.

c. Spread soil mixture with adequate moisture in uniform layers over the approved subgrade, where planting is indicated.

d. For soil application around trees see the appropriate section of this Article.

e. Manually spread soil mixture around trees, shrubs and obstacles.

(3) Finish Grading of Soil Mixture

a. Grade soil, eliminating uneven areas and low spots, ensuring positive drainage away from buildings and towards storm drainage systems. Remove soil contaminated with toxic materials. Remove surface debris, roots, vegetation, branches, stones in excess of 3" diameter, and all extraneous material. Dispose of the removed materials. Prepare loose, friable beds by means of hand cultivation and subsequent raking. Following planting, mulch planted shrub beds with a depth of 5" gravel mulch and rake smooth.

10.3.7 SODDING

(1) Delivery, Storage, & Handling:

a. Cut and lift sod by approved methods. Cut sod in pieces approximately ¾ to one inch thick and a **minimum 30” width**. Roll or fold sod so it may be lifted and handled without breaking or tearing and without the loss of soil.

b. Schedule deliveries to coincide with soil preparation and finish grading. Keep storage at the job site to a minimum without causing delays.

   i. Deliver, unload and store sod on pallets within 24 hours of being lifted.
   ii. Do not deliver small, irregular or broken pieces of sod.

c. Storage

   i. During Wet Weather - Allow sod to dry sufficiently to prevent tearing during lifting and handling. ii. During Dry Weather - Protect sod from drying, water as necessary to ensure its vitality and prevent excess loss of soil in handling. Sod that dries out will be rejected.

(2) Timing of Installation:

a. Placement of Sod:

   i. Irrigated & Non-Irrigated Areas: Within seven (7) calendar days after the completion and acceptance of finish grading in any area.
   ii. There shall be no installation of sod between October 1 and April 1.

(3) Installation:

a. Lay sod during the growing season. Sodding during the dry summer period, at freezing temperatures, or over frozen soil is not acceptable.
b. Lay sod within 36 hours of it being lifted.
c. Lay sod in rows with the joints staggered. Butt sections closely without overlapping or leaving gaps between the sections. Cut out irregular or thin sections with a sharp knife.
d. Lay sod flush with the adjoining, existing sodded surfaces. Top of sod dirt shall be 2 inches below the top of concrete walks or curbs.
e. After sodding has been completed, roll horizontal surface areas in two directions perpendicular to each other.
f. Repair and re-roll areas with depressions, lumps, or other irregularities.
g. Heavy rolling to correct irregularities in the grade will not be permitted.
h. Water the sodded areas immediately after laying to obtain moisture penetration through the sod into the top 4 inches of topsoil.
i. Replace damaged areas at no additional cost to the City.

(4) Field Quality Control:

a. Final Acceptance -

   i. Sodded areas will be accepted at final inspection if –
      1. Sodded areas are properly rolled and turf is established (including that the roots have begun to develop).
      2. Sod is free of bare and dead spots and without weeds.
      3. No surface soil is visible when the grass has been cut to a height of 2 inches.
      4. Sodded areas have been mowed a minimum of two times.

(5) Protection:

a. Protecting sodded areas against traffic or other use immediately after sodding is completed by placing adequate warning signs and barricades.
b. Provide adequate protection of the sodded areas against trespassing, erosion, and damage of any kind. Remove this protection after the Landscape Architect has accepted the sodded areas.

(6) Maintenance:

a. Contractor shall maintain sodded area (including mowing, watering, removing weeds and resodding) until the Landscape Architect has accepted the sodded areas.
b. The Contractor shall maintain the sodded area until the Landscape Architect has accepted the project.
c. The maintenance includes:

i. Managing the irrigation schedule and repairs to the irrigation system as necessary.
ii. Maintaining acceptable coverage on all newly sodded areas to guarantee growth of the plant materials.

iii. Mowing, if applicable, to control weed growth and recommended growing height per supplier. If weed population is high, then clippings shall be collected. Frequency of mowing shall be done per the supplier's recommendations to guarantee a healthy and flourishing turf condition. If mowing is not possible, then the Contractor may use herbicides as necessary once the vegetation is at a mature stand and can handle the chemicals. If herbicide does damage the vegetation stand, then the Contractor will be responsible for reestablishing the vegetation stand at the Contractor's expense.

iv. Trimming shall be done where mowers are unable to reach.

v. Clippings shall be removed from all hard surfaces.

vi. Provide suitable signage notifying the public to keep off the seeded areas, providing barricades as needed.

vii. Apply fertilizer as necessary, typically four (4) times per year.

10.3.8 Root Barrier

(1) Installation:

a. Cut the desired length of molded roll material and install directly alongside hardscapes where shown on the plan.
b. Connecting: Connect the ends by overlapping two 6" sections with the leading rib cut directly down the middle. Glue the surface using Century sealant or equal.

c. When necessary, use an umbrella Cement nail to tack up the barrier. This must be used above the grade or water line.
d. Vertically integrated and flared, molded 90 degree root deflecting ribs are always facing the root ball.
e. Always install the root barriers 2” above the grade to prevent root penetration above the barrier.
f. Backfill with existing native soil. If necessary for drainage, use gravel or crushed rock. Avoid backfill less than ¾” or greater than 1-1/2” in diameter. Finish to grade. Do not distort the barrier during installation.

10.3.9 Seeding

(1) Timing of Installation:

a. No-Till Drill Seeding:
   i. Irrigated Areas: Within fourteen (14) calendar days after the completion and acceptance of finish grading in any area.
   ii. There shall be no seeding between September 20 and April 15.

(2) Preparation:

a. Excessive Soil Moisture: Do not commence with the work of this section when soil moisture content is so great that excessive compaction will occur.
b. Inadequate Soil Moisture: Apply water, as necessary, to bring the soil to optimum moisture content for planting. Do not work soil when it is so dry that dust will form in the air or that clods will not break readily.
c. After Site Preparation is completed, Contractor shall receive approval from the Landscape Architect prior to seeding.

(3) Mulching:

a. Application:

i. All areas to be seeded shall be mulched.

ii. Mulch should be applied immediately prior to seeding. The period between mulching and seeding shall not exceed 2 weeks.

iii. Rate of mulching shall be 1.5 tons per acre.

iv. Mulch shall be uniformly applied over the designated area.

v. Mulch shall be anchored in place immediately following application (the same day as applied).

vi. A mulch crimper, with flat serrated disk shall be used to anchor the mulch into the soil. The disk shall be not less than ¼ inch in thickness, shall have dull edges, and shall be spaced not more than nine inches apart. The disk shall be of sufficient diameter to prevent the frame of the equipment from dragging the mulch over the mulched area with anchoring equipment. The depth of cut shall be 3 to 4 inches.

Care must be exercised so that a minimum amount of soil will be disturbed.

(4) Field Quality Control:

a. Tests: Samples of materials may be taken and tested for conformity to the Specifications at any time.
b. Rejected Materials: Remove rejected materials immediately from the site at the Contractor's expense. Contractor shall pay the costs of testing materials that are not meeting specifications.

(5) Acceptance:

a. Contractor shall reseed areas that are thin or weak 14 days after the initial seeding. Contractor shall reseed (and keep reseeding) until there are no bare, thin or weak spots greater than a 12 square inch area.
b. Maintenance – Contractor shall maintain the turf area (i.e. mowing, watering and reseeding) until the Landscape Architect has accepted the lawn. The maintenance period includes the time period from initial seeding to final acceptance of the turf area, which may be a different date than the acceptance of the other facilities in the project. It will be the responsibility of the Contractor to establish a stand of grass that has no bare, weak or thin spots greater than a 12 square inch area and to maintain the lawn until the stand of grass has been achieved. From that date, a one – year warranty will begin on the lawn area.

10.3.10 TREES AND PLANTS

(1) Quality Assurance

a. Regulatory Requirements:

i. Plants: In conformance with the requirements of AJCH (plant names shall meet standards of AJCH), American Standard for Nursery Stock and Colorado State Nursery Act.
ii. Comply with federal, state and local laws requiring inspection for plant disease and infestations. Inspection certificates required by state law shall accompany each shipment of plants and the certificates will be delivered to the City. Inspections are to be performed in the state of origin.

b. Transport plant materials in enclosed or tarped vehicles to minimize damage from the wind and sun. Contractor is to carefully schedule and monitor shipments to minimize shipping time and to ensure the careful handling of plants.
c. Shipments of plants will be carefully inspected by the Engineer and/or Landscape Architect at the site at the time of off-loading from trucks to verify compliance with the above shipping requirements.
d. Substitutions of plant materials will not be permitted unless authorized in writing by the Landscape Architect. If proof is submitted that the plant specified is not

obtainable, a proposal will be considered for using the nearest equivalent size or variety with corresponding adjustments of Contract Price.

e. Landscape Contractors shall provide two previous project examples of similar size and scope with their bids.

f. Personnel: Employ only qualified personnel familiar with the required work.

(2) Delivery, Storage, and Handling

a. Preparation:

i. Plants: Containerized or balled and burlapped (B & B) with limbs bound, properly pruned and prepared for shipping in accordance with accepted industry standards and in a manner that will not damage roots, branches, shape, short and long term health, and future development. Size of root ball shall be as defined in the American Standard for Nursery Stock (American Association of Nurserymen; latest edition). Keep root systems moist and protect plants from adverse conditions due to climate and transportation between the time they are dug and actual planting. Spray broad-leafed trees planted in full leaf with Protec 400W Anti-transpirant or accepted substitute prior to delivery to the site. Apply according to the manufacturer's directions.

ii. Identification: Grower's label affixed to the plant which contains data necessary to indicate conformance to the Specifications. Use durable waterproof labels with water resistant ink that will remain legible for at least 60 days.

iii. Notify the Landscape Architect a minimum of two weeks prior to the delivery of plant materials to site so that a pre-delivery inspection may be made. Alternatively, indicate a delivery schedule in advance so that plant material may be inspected upon arrival at the job site, whichever is more appropriate.

b. Delivery:

i. Deliver packaged material in sealed containers showing weight, analysis and the name of the manufacturer. Protect materials from deterioration during delivery and while stored at the site.

ii. ii. Deliver only plant materials that can be planted in one day unless adequate storage and watering facilities are available on the project site.

iii. Protect B & B root balls during shipping with proper handling techniques; cracked or crumbling root balls will be rejected. Protect root balls at the site by maintaining a thorough moisture; heel in with sawdust (or comparable material) if not planted within 24 hours of delivery. Maintain the root ball in a moist condition and do not allow it to dry out.

iv. Tree trunks are to be wrapped in burlap during transportation and installation to avoid trunk damage. Trees with trunk damage will be rejected.

v. Notify the Landscape Architect or City Engineer of the delivery schedule a minimum of 48 hours in advance so that plant material can be inspected prior to unloading from trucks.

vi. Remove rejected material immediately from site.

vii. Do not lift, move, adjust to plumb, or otherwise manipulate plants by the trunk or stems.

c. Handling:

i. Do not drop plants. Do not lift plants by the trunk, stems or foliage.
1. Ball of Plant: Natural, not made. Handle plant by the root ball at all times. Plants will not be accepted if the root ball is broken or the trunk is loose in the ball.

ii. Protect plants from drying out or other injury.
1. Prune minor, broken and damaged roots before planting. Treat minor wounds immediately to prevent disease and insect infestation.
2. Major damage will be cause for rejection as determined by the Landscape Architect.

(3) Maintenance

a. General: Maintain trees, shrubs and ground cover in a healthy vigorous state until final acceptance of the entire project. Provide all supervision, labor, material, equipment and transportation required to maintain plants under the requirements of this section.
b. Materials: Conform to the Specifications or otherwise be acceptable to the Landscape Architect.
c. Replacement: Replace and replant plants damaged by the Contractor's operations and negligence, and according to *WARRANTY* of this section.
d. Watering: Water deeply (8-10") when soil moisture is below optimum level for the best plant growth. Water woody plants in any winter month that snow or rain does not provide at least 1" of precipitation.
e. Wrapping: After all trees have been inspected and accepted by the Landscape Architect, wrap deciduous tree trunks with standard nursery crepe wrap material from the ground level to the first limb after pruning. Tape securely at the top and bottom. Remove wrapping for spring and summer and replace it in the fall.
f. Staking and Guying: Inspect at least two (2) times per year (spring and fall) and assure conformance with the following:

i. Webbing strap in good condition.
ii. Trunks and branches are not girdled by the webbing strap.
iii. iii. Guy wires secure but not taut.
iv. iv. Stakes secure.
v. Trees plumb.

g. Pruning: Prune only damaged or dead branches in accordance with the Specifications in this section.
h. Mulching: Supplement mulch around trees in accordance with the Specifications in this section.
i. Weed Control: As required, use selective herbicides approved by the Landscape Architect.
j. Insect and Disease Control: As required, use insecticides and fungicides approved by the Landscape Architect.

(4) Plant Protection and Delivery

a. All plant material shall be protected, from the time of digging to the time of final acceptance, from injury, excessive drying or winds, improper ventilation, overwatering, freezing, high temperatures, or any other condition damaging to the plant. Any plants showing evidence of poor care, or which are molded, mildewed, wilted or dried out shall be rejected.
b. Plant materials shall be planted on the day of delivery or shall be placed in a temporary nursery, kept moist, shaded and protected from the sun and wind. If balled and burlapped plants are not planted on the day of delivery, they shall be heeled in immediately in the temporary nursery, kept moist and protected with damp soil, moss, or other acceptable material.
c. Plants shall not be bound with wire or rope that may damage the bark or break branches. Plants shall be lifted and handled from the bottom of the root ball or container. Plants with root balls that are loose, cracked, broken, man-made, or completely dry, or plants with trunks loose in the ball before or during planting operations shall not be accepted and shall be removed from the site at the Contractor's expense within 24 hours.

(5) Preparation

a. Plants: Do not begin planting until deficiencies are corrected or plants replaced.
b. Protection:
    i. Be responsible for the proper repair of underground pipe, electric wiring, or other subsurface improvements damaged by operations under this Section.
    ii. Be responsible for proper repair to walls, pavements and any other structural surfaces damaged by the operations under this Section.
    iii. Pay for repairs made by contractors designated by the City.
    iv. Be responsible for replacement of vandalized materials not yet installed. Report all cases of vandalism promptly to the City .

(6) Excavation of Planting Pit

a. All plant pits shall be centered on the location stake and shall be excavated in a saucer shape with vertical sides and a flat bottom. The depth of the plant pit shall be measured from the finished grade of the soil, not mulch. The base of all soil balls shall be placed on compacted backfill fill.
b. Trees: The diameter of all tree pits shall be a minimum of 3X larger than the diameter of the ball or spread of the roots. There shall be a minimum 3" clearance between the bottom of the root ball and the plant pit for balled and burlapped stock. Trees are to have wire baskets, bundling cords, and the top 2/3 of the burlap removed. Except for trees planted on slopes, the top surface of all root balls shall be flush with the adjacent planting beds or with the subgrade below the sod. It is important not to place tree balls too low.
c. Shrubs: The diameter of all shrub pits shall be twice the diameter of the ball or spread of the roots. There shall be a minimum 6” clearance between the bottom of the root ball and the plant pit. The base of all root balls shall be placed on compacted backfill fill.

d. Vines and Ground Covers and Perennials: The diameter of all vine and ground cover pits shall be 6 inches greater than the spread of the roots.

(7) Planting

a. General:

i. Center trees in the trench as dimensioned on drawings.
ii. Face for best effect.
iii. Set the plant plumb and hold rigidly in position until the soil has been lightly tamped around the ball or container roots.

b. Balled and Burlapped Plants (B & B):

i. Plants shall be set in the center of the pit on compacted backfill mix. Immediately after setting in the pit, all non-biodegradable materials shall be completely removed from the ball and trunk, including but not limited to plastic, metal, wire, wood, cardboard, paper, fiber, treated burlap and twine. The only exception shall be that the bottom (not sides) of fiber pots and plant handling shall be done in such a manner so as not to injure the plant root system, disturb the soil ball or in any way cause harm or stress to the plant. If the root system of a container-grown plant has become container-bound, the roots shall be gently, vertically cut on four sides of the root ball prior to planting.
ii. ii. Plant trees and shrubs with the root flare of the plant at grade level. All plants shall be placed and kept plumb and straight as the pit is filled with backfill mix. Any plant which is not perfectly upright and plumb prior to final acceptance shall be adjusted by the Contractor to a plumb position. Trees and shrubs in non-irrigated areas are to have saucers built around them at the drip line.
iii. After placing the plant in the pit, the hole around the plant root system shall be halfway backfilled with the specified mix and any large air pockets removed by hand with the blunt, handle end of a shovel or other such hand tool. If the Landscape Architect determines that the ball is excessively dry, the Contractor shall then inset a deep watering device into the ball at a 45 degree angle every 8 inches for one minute. The pit shall then be completely filled with backfill mix and tamped again with the shovel. No mechanical compaction shall be allowed. The pit shall then be watered by thoroughly saturating the backfill with water to a minimum of 3 feet. No watering shall be done prior to this time. Watering shall be repeated once, when all free water has disappeared. This second watering shall not be completed if the subgrade around the pit is already moist. After watering, the Contractor shall add the necessary soil to establish the finish grade level before adding specified mulch. All surplus soil and debris shall be removed by the Contractor. The Contractor shall stake and guy trees immediately after planting according to the standard detail.

c. Container-Grown Plants at Planter Pots:
i. Can Removal:

1. Knockout Cans: Do not cut the sides. Tap the can and gently remove the plant.
2. Straight-Side Cans: Cut the cans on 2 sides with an acceptable can cutter. Do not cut with a spade or axe.

ii. Carefully remove plants without injury or damage to the root ball. After removing the plant, vertically score the root ball using a sharp knife, about 1/4” deep and every 2” to 3” in circumference.

iii. Biodegradable container installations must be accepted prior to planting.

iv. Dig planting holes as specified.

v. Hand place plants on firmly compacted soil. Hand backfill and hand tamp leaving slight depression around outer circumference of planting area.

(8) Anchoring and Guying of Trees

a. Root ball Anchoring:

i. Anchor the root balls of trees as standard method per the details and notes on the plans.

ii. Trees shall remain plumb and straight from installation through the warranty period.

iii. Trees shall be supported immediately after planting. All trees shall be root ball anchored and wrapped (depending on date of installation) as detailed and anchored as detailed and/or per manufacturer’s recommendations. Wrap smooth barked trees as part of maintenance work in the fall. Refer to planting and tree grate details.

iv. Mock-Up: Install mock-up of manufactured project at the job site per the manufacturer's instructions for review and acceptance by the Landscape Architect.

Tree Caliper @ 12-in Above Grade	Root ball Anchor Kit
Up to 3 inch	Duckbill 68 RBK Kit
Up to 6 inch	Duckbill 88 RBK Kit

b. Guying and Wrapping:

i. Stake and guy all trees not receiving root anchoring.

Tree Caliper @ 12-in Above Grade	No. of Guys	Size	Turn-Buckle	Deadmen/Anchor
2-6 inch	3	1/8”x7x7	3/8”x10-5/8	4x4x24, 18” deep
6-8 inch	3	3/16”x7x7	3/8”x10-5/8	6x6x30, 30” deep

ii. Root ball anchor or stake all trees immediately after planting, as shown on the planting details. Do not plant trees that cannot be anchored, or staked and guyed properly before the workday ends.

iii. Wrap all deciduous tree trunks per planting details no later than November 15. Before wrapping, the Landscape Architect should inspect tree trunks for injury, improper pruning, and insect infestation. Contractor shall remove all wrappings by May 21.

iv. Trees shall remain plumb and straight from installation through the warranty period.

v. Tree support shall be done as outlined on the following tables.

vi. Trees shall be supported immediately after planting. All trees shall be guyed and wrapped as detailed, or anchored as detailed and/or per the manufacturer's recommendations. Wrap smooth barked trees as part of maintenance work in the fall. Refer to planting and tree grate details.

vii. Wire and Positioning: Wire shall be passed through grommets in nylon straps to prevent direct contact with the bark of the tree and placed around the trunk in a single loop above the lowest branch. Wire shall be tightened and kept taut by twisting the strands together. Guy trees above the first point of branching, with guys spaced equally around and outside the perimeter of the ball. Cover guys with a specified tree collar at points of contact with the bark. Position guys at crotches and fasten to a deadman. All exposed wire is to be covered by white PVC pipe per the planting details.

viii. Turnbuckle: Provide one (1) turnbuckle for each guy. Use 2 cable clamps at each cable connection. Place white plastic guy covers on all guys.

ix. Mock-Up: Install a mock-up of the manufactured project at the job site per the manufacturer's instructions for review and acceptance by the Landscape Architect.

x. Contractor shall return to the site after one year and remove stakes.

(9) Schedule

a. No planting work shall take place during freezing, excessively windy or wet weather or when the ground conditions are, in the opinion of the Landscape Architect, not in a condition to be properly worked. Contractor shall include time in his schedule for work stoppage due to inclement weather or ground conditions. Inclement weather or ground conditions shall not be cause for an extension of the project completion date unless written approval has been obtained from the Landscape Architect for an extension of the project completion date.

b. No planting work shall commence until the adjacent site improvements, pavements, utility installation and finish grading are completed. The Contractor shall limit his use of heavy equipment on pavements and planted areas. In all cases, he shall be responsible for all damage to existing conditions.

(10) Plant Installation in Winter

a. When minimum night temperatures drop below 40º F, the following operations will be adhered to:

i. Preparation for field installation of plant materials shall be such that newly-delivered plants can be installed immediately and not maintained in temporary storage.
ii. Broadleaf evergreens and coniferous plants installed after December 1st should be treated with an approved anti-desiccant according to the manufacturer's recommendations.
iii. Where specified, backfill should be placed around plants immediately following planting. Leaving the tops of root balls exposed for more than 24 hours is unacceptable.
iv. Installation contractors should closely monitor the soil moisture levels of plant root balls. Inspect moisture levels weekly and adjust irrigation controllers accordingly. Soils should be moist but not saturated. Do not irrigate soils that contain adequate moisture.

(11) Watering

a. Plants shall be watered immediately after planting. After the first watering, water shall be applied to plants as conditions require to keep the plants in a healthy and vigorous growing condition until completion of the Contract.

(12) Pruning

a. Trees: A licensed tree surgeon shall prune trees as necessary under direction of the Landscape Architect immediately following installation.
b. New Plant Material: Prune the minimum necessary to remove injured twigs and branches, deadwood, and suckers and as required to insure a healthy plant representative of the species and in keeping with accepted horticulture practices.

i. Prune any damaged or dead roots or branches back to and slightly above, the nearest healthy side bud, but at angle from the remaining portion not exceeding 45 degrees.
ii. Evergreen: Trim only damaged or dead foliage and/or branches.
iii. Do not prune leaders. On cuts over 1" diameter, trace the injury back to living tissue, smooth and treat with an accepted tree wound dressing.

(13) Mulching - Where used, mulch shall be placed within 2 days of planting and a minimum of 4-inches deep to a radius of 3-feet. Mulch shall not be placed within 6 inches of the trunk.

(14) Maintenance, Acceptance, and Guarantee

a. Maintenance period shall begin immediately after each area is planted based on the following requirements:

i. All planting shall be protected and maintained until final acceptance of all work. Maintenance shall include watering, weeding, cultivating, mulching, tightening and repairing of guys, removal of dead branches, resetting plants to proper grade or upright position, barricading the site and other necessary operations. The Contractor shall provide all water

and equipment necessary for maintenance during the duration of the contract. Water is available at the planting site. After final acceptance, maintenance becomes the responsibility of the City.

ii. If during the duration of the contract prior to final acceptance, any of the plants die, or if they are, in the opinion of the Landscape Architect, in unhealthy or unsightly condition or if they have lost their natural shape due to dead branches or excessive pruning of branches, then the Contractor shall replace the material at his expense. This replacement shall be completed prior to final acceptance of the project and shall not void the one-year guarantee.

iii. Minor vandalism, theft, or other damage to the plants or related work shall be the responsibility of the Contractor until all work receives final acceptance.

b. Prior to final acceptance, the Contractor shall furnish four (4) copies of written maintenance instructions to the City for maintenance and care of all new planted areas for the first 3 years after installation. These instructions shall include but not be limited to staking, pruning, insect and disease control and fertilizing.

c. Guarantee

i. For a period of two years after final acceptance of all work and at no additional cost to the City, the Contractor shall replace any plants that have died or are partially dead due to unhealthy or unsightly conditions, or have lost their natural shape due to dead branches or excessive pruning of dead branches. Adverse site conditions are natural causes for the purposes of this contract. Inadequate or improper maintenance by the City shall not be cause for replacement by the Contractor, provided the Contractor has submitted throughout the guarantee period a bi-monthly letter of report to the City on improper or inadequate maintenance practices and recommended remedial actions. The Contractor shall apply a “new” one year guaranty period to each replacement plant that is installed.

ii. The Contractor shall guaranty all plants to be true to name and to meet all conditions of these specifications. Any plant which is not true to name as indicated by leaf, flower form, or fruiting characteristics revealed within the guarantee period shall be replaced by the Contractor, at the Contractor's expense.

iii. All replacement planting under the guarantee provision shall be executed within one month of notice to replace such plants. Upon the Landscape Architect’s written approval, the Contractor shall replace rejected plants at a later date, mutually agreed upon, provided that the Contractor removes all rejected plants within seven days of the notice to replace such plants. If the rejected plants are not removed in 7 days, the Landscape Architect may at their option remove these plants and the cost of such removal shall be charged to the Contractor.

iv. Replacement planting is to be in accordance with the original specifications and its cost considered to be included in the bid price. All areas damaged by tree or shrub planting or replacement operations are to be fully restored to their original condition as specified.

10.3.11 INTEGRAL CONCRETE COLORING

(1) Placing Colored Flatwork Concrete

a. The concrete consistency as denoted by the slump test should remain at the same slump + ½" for all colored concrete placed. The concrete slump shall be 3" maximum + ½" at the point of delivery. Once a portion of the batch has been placed, no water should be added to the remaining batch.
b. Concrete should always be placed in forms as near the final location as possible. Avoid using a concrete vibrator to move the concrete laterally.

(2) Finishing Colored Flatwork Concrete

a. Finishing must be done uniformly. Over troweling often results in dark spots in the colored concrete and will not be permitted. Finishing must not begin until bleed water has left the surface. No sprinkling or fogging will be permitted.

(3) Curing Colored Flatwork Concrete

a. The finished slab should be sealed with Davis seal in a matching color. Plastic sheeting or membrane paper will not be permitted.

(4) Patching Colored Concrete

a. All repair work must be done within three days of form removal so the repair and surrounding concrete age together.
b. White cement must be added to the patching mix to overcome the fact that a patch area will normally dry darker. The color added to the patch mix should be the same ratio as the original color/cement ratio.

10.6 METHOD OF MEASUREMENT

The quantities of native seeding will not be measured but shall be the quantities shown on the plans, completed and accepted; except that measurements will be made for revisions requested by the Engineer, or for discrepancies of plus or minus five percent of the total quantity shown on the plans.

The quantity of native seeding shall include fertilizer and matting (if applicable), mulch and seed, completed and accepted. The quantity of sod to be measured will be the actual number of square feet including sod preparation, fertilizer, and sod, completed and accepted.

Measurement for acres will be by slope distances.

10.7 BASIS OF PAYMENT

The accepted quantities of native seeding and sod will be paid for at the contract unit price for each of the pay items listed below that appear in the bid schedule. Payment will be made under:

Pay Item	Pay Unit
Seeding (Native)	Acre
Sod	Square Foot

Soil preparation, seed, fertilizer, mulching and erosion matting will not be paid for separately but shall be included in the work.

Cost for adjusting or re-adjusting the seeding or fertilizing equipment will not be paid for separately but shall be included in the work.

Costs for adjusting or re-adjusting the mulching equipment will not be paid for separately but shall be included in the work.

Water for seeding, mulching, hydraulic mulching, and sodding will not be paid for separately but shall be included in the work.

{This Page Intentionally Left Blank}

ARTICLE 11

SANITARY SEWERS

11.1 GENERAL

11.1.1 DESCRIPTION

The work covered by this section of the specifications consists of the furnishing of all labor, supplies, equipment and materials and performing all operations in connection with the construction of sanitary sewers and appurtenances, as shown on the plans, as herein specified and directed by the City Engineer.

11.1.2 PLANS AND DATA

Profiles of the ground are shown on the plans for the work. The Contractor must satisfy themself regarding the character of the material to be excavated and the work to be done.

11.1.3 SOURCE OF SUPPLY

Materials complying with these specifications will be accepted from any source of supply. The Engineer reserves the right to reject the entire output of any source from which it is impossible to secure a continuous supply of satisfactory material or a source where conditions are such that the use of unfit material can be prevented only by extraordinary methods.

The Engineer may require the taking and testing of preliminary samples of material from any source before that source is approved for delivery.

The Contractor shall be held responsible for the care and storage of materials delivered on the work site or purchased for use thereon. Any material that has been delivered on the work site and has become damaged before actual incorporation in the work may be rejected by the Engineer even though it may have been accepted previously. Stored material will be so located as to facilitate thorough inspection.

Materials which do not meet the requirements of these specifications will be rejected and will be promptly removed from the work site.

11.2 MATERIALS

11.2.1 PIPE MATERIALS

All sanitary sewer mains shall be a minimum of eight inches (8”) in diameter. Any sanitary sewer mains less than eight inches (8”) will not be approved or accepted.

(a) POLYVINYL CHLORIDE (PVC) PIPE. Polyvinyl chloride pipe shall be unplasticized polyvinyl chloride manufactured specifically for sanitary sewage and with an integral bell. All PVC pipe with diameters not exceeding fifteen inches (15") will conform to ASTM D3034 Standard Specifications. A minimum wall dimension ratio (ratio of the average specified outside diameter to the minimum specified wall thickness) shall be SDR 35. All PVC pipe with diameters eighteen inches (18") and greater shall conform to ASTM F679 Standard Specifications.

The bell end of all pipes shall contain a confined elastomeric gasket conforming to ASTM F477 and will be tested in accordance with ASTM D3212 Standard Specifications. PVC pipe shall not be exposed to ultraviolet light longer than six (6)

months. Any discoloration of the pipe material will be evidence of ultraviolet damage and may be reason for rejection and removal from the project.

All PVC sewer pipe, eight inches (8") in diameter or larger, shall be an integral green tint in color. Lightly tinted pipe will not be acceptable. Contractors shall install all **PVC pipe in a manner where there are no sags or interruptions in the flow**. All pipe shall have a home mark on the spigot to indicate proper penetration when the joint is made.

Connections to an existing PVC pipe, for extensions or repairs, shall be made with a double bell coupling when a bell end does not exist, (i.e. plain end to plain end connection). After it has been laid and backfilled, and prior to the placing of surface improvements, all PVC pipe shall be tested by the Contractor by means of a certified mandrel (go-nogo device).

(b) CAST IRON PIPE (CIP). Cast Iron Pipe will not be allowed.

(c) DUCTILE IRON PIPE (DIP). Ductile Iron Pipe shall be centrifugally cast, grade 60-42-10 iron conforming to ASTM A746 and ANSI A21.51 Standard Specifications. Thickness class for buried pipe shall be as determined by ANSI A21.51, Tables 51.1 and 51.2. Ductile Iron Pipe shall have rubber gasket push-on joints and shall have a polyethylene lining.

Polyethylene lining material shall conform to ASTM D1248 Standard Specifications, compounded without an inert filler except 3% carbon black to resist ultraviolet rays. The polyethylene shall be chemically bonded to the interior of the pipe. The lining shall have a nominal thickness of 40 mils and a minimum thickness of 35 mils.

Each piece of pipe shall be checked for holidays by the manufacturer. Holiday testing shall conform to ASTM G62 standard specifications.

Field cutting and coating of the cut pipe shall be made in accordance with the manufacturer's recommendations. In no case shall polyethylene-lined pipe be cut with a torch.

An approved pipe bonding and cathodic protection system will be required on all buried ductile iron pipe.

(d) VITRIFIED CLAY PIPE (VCP) - EXTRA STRENGTH. Vitrified clay pipe will be allowed only when prior written approval is obtained from the City Engineer.

11.2.5 CONCRETE MANHOLES

Unless otherwise specified on the plans, or approved by the City Engineer, manholes shall be constructed of precast concrete barrels and cones with cast-in-place concrete bases. Bases may be precast if placed on six inches (6") of compacted gravel bedding extending a minimum of twelve inches (12") around the base or the width of the excavation-whichever is greater. In the event severe groundwater conditions are encountered, the thickness of the gravel bedding below the manhole base shall be increased to twelve inches (12"). Alternate construction methods may be required as approved by the Engineer on a case-by-case basis. The concrete channel and bench within precast bases shall be poured on site after the sewer pipe is set to grade. Where possible, the manhole channel shall be sewer pipe with the upper portion removed. Precast concrete barrels and cones shall conform to ASTM C478 Standard

Specifications except that the wall thickness may be either wall A or wall B as described in ASTM C76 Standard Specifications. Provide eccentric cones for all manholes greater than six feet (6') deep, and flat lids for manholes six feet (6') deep or less as shown on the drawings. Manholes shall conform to the Standard Details shown on the plans. Concrete used in the construction of all sanitary sewer structures shall conform to those portions of *ARTICLE 4 – CONCRETE and ARTICLE 5 – STRUCTURAL CONCRETE*, which are applicable.

All joints in the manhole barrel, cone, grade adjustment rings, and flat top sections shall be sealed with a preformed flexible plastic sealing compound conforming to Federal Specification SS-S-00210 (GSA-FS6). All joint surfaces shall be cleaned prior to applying the sealant. The outside of the manhole joints shall be wrapped with a butyl adhesive tape sealant that conforms to Federal Specification SS-S-00210 (GSA-FS6). The eccentric cone section shall be situated so that the slope of the cone section is pointing toward the downstream direction.

All pipe penetrations in cast-in-place concrete bases shall utilize two strips of the above mentioned preformed flexible plastic sealing compound, placed around the pipe, as a water stop. All pipe penetrations in precast concrete bases shall be provided with a resilient rubber connector in conformance with ASTM C923, when connection to an existing manhole is allowed a water stop and non-shrink grout shall be used at all pipe penetrations.

11.2.6 TRENCHLESS MANHOLE REPAIR

Unless specified on plans, materials used shall conform to the following, or be otherwise approved by the engineer:

(a) CEMENTIOUS MATERIAL

DESCRIPTION	METHOD	RESULTS
Compressive Strength, 28-day	ASTM C109	9,000 psi
Flexural Strength, 28-day	ASTM C293	1,000 psi
Bond Strength	ASTM C882	2,000 psi
Freeze-Thaw Durability	ASTM C666	No visible damage after 300 cycles
Shrinkage at 95” Humidity, 28-day	ASTM C596	0%
Sulfide Resistance	ASTM C267	No attack

(b) EPOXY COATING

DESCRIPTION	METHOD	RESULTS
Flexural Strength	ASTM D790	13,000 psi
Compressive Strength	ASTM D695	18,000 psi
Tensile Strength	ASTM D638	7,600 psi
Tensile Ultimate Elongation	ASTM D638	1.5 %
Hardness, Shore D	ASTM D2240	85-89
Taber Abrasion, CS17 Wheel	ASTM D4060, 1,000g load/1,000 cycles	<112mg loss
Adhesion	ASTM D4541, Concrete	Substrate Failure and >250 psi*

*Adhesion Mode of Failure shall be by Substrate Failure mode only with an adhesion value 250psi and greater. Mode of failure categorized as

"Glue Failure or Adhesive Failure Y/Z" below the minimum PSI specified shall be cause for retesting. Mode of failure as noted in ASTM D4541Section 8.3.1 thru 8.3.3/ASTM D7234 Section 9.3.1 thru 9.3.4 categorized as Adhesive A/B, B/C, C/D etc. or Cohesive B, C, D etc. shall be cause for rejection.

11.2.7 MANHOLE RING AND COVER ADJUSTMENT

(a) CONCRETE GRADE RINGS. Reinforced concrete grade rings may be used in the adjustment of manhole rings. Grade rings shall have a minimum thickness of two inches (2") and maximum thickness of six inches (6"). Total adjustment height shall not exceed the tolerances as shown on the Standard Details.

(b) HIGH DENSITY POLYETHYLENE (HDPE) GRADE RINGS. High Density Polyethylene grade rings may be used in the adjustment of manhole rings. Grade rings shall be rated for HS-20 loading. Total adjustment height shall not exceed the tolerances as shown on the Standard Details.

11.2.8 MANHOLE RING AND COVERS

Iron castings shall conform to the requirements of AASHTO M306. Gray iron used in the casting shall conform to AASHTO M105, Class 35B, unless otherwise specified.

Castings shall be boldly filleted at angles and the risers shall be sharp and perfect. Castings shall be true to pattern in form and dimensions, free from pouring faults, sponginess, cracks, blow holes or other defects in positions affecting their strength for services intended. The ring and covers for manholes and all sanitary sewer appurtenances shall be straight and shall fit properly together so that traffic will not cause them to rattle. Rough spots, which prevent a suitable fitting, shall be removed by grinding. Manhole castings shall be Neenah R-1706, Deeter 1258, East Jordan Ironworks 2430 or approved an equal. Manhole covers shall be lettered "SANITARY". See City Standard Details for additional information.

11.2.9 REINFORCING STEEL

Reinforcing steel shall meet the requirements of *ARTICLE 5 – STRUCTURAL CONCRETE, SECTION 5.3 - REINFORCEMENT.*

11.2.10 BEDDING FOR PIPE

(a) CLASS “A” BEDDING - Class "A" bedding shall be defined as the method of bedding by which additional supporting strength of the pipe is attained by supporting the pipe with a continuous concrete cradle. The lower part of the pipe shall be bedded in a continuous cradle constructed of concrete conforming to those portions of *ARTICLE 4 – CONCRETE* for Caisson Concrete Mix, which are applicable.

(b) CLASS “B” BEDDING - Class "B" bedding shall be a well-graded crushed stone or slag. When tested by means of laboratory sieves it shall conform to the following requirements: (AASHTO M43, NO. 67 gradation)

SIEVE SIZE	PERCENT PASSING
1 in.	100
¾ in.	90
3/8 in.	20 – 55
No. 4	0 – 10
No. 8	0 – 5

When crushed gravel or stone is used, at least 50 percent, by weight, of the particles retained on the No. 4 sieve and above shall have at least two (2) fractured faces.

(c) REINFORCED CONCRETE ARCH AND ENCASEMENT – Concrete and reinforcement for an arch or encasement shall conform to those portions of *ARTICLE 4 – CONCRETE for 6-Sack Concrete Mix and ARTICLE 5 – STRUCTURAL CONCRETE*, which are applicable.

11.2.11 TRENCH STABILIZATION MATERIAL

Backfill for unstable subgrade conditions shall be select material as approved by the Engineer. Contractor shall submit a sample and sieve analysis for City Engineer's review and approval prior to the delivery of the materials to the site.

11.2.12 BACKFILL MATERIALS

Subject to the provisions specified herein, the material removed from the project excavations may be used as backfill. All organic material, rubbish, debris, and other objectionable materials shall be removed from the site and shall not be considered acceptable for backfill.

(a) INITIAL BACKFILL. The specified selected material for the initial backfill (from the spring line of the pipe to a plane one foot (1') above the top of the pipe) in the "pipe zone" shall be Class "B" bedding material, unless stated otherwise on the plans. The initial backfill shall be carefully and simultaneously placed on each side of the pipe for the full width of the trench.

(b) BACKFILL ABOVE THE PIPE ZONE. The material for backfill above the pipe zone (from the top of the bedding to a plane two feet (2') above the top of the bedding) shall be free from rocks, stones, concrete, or asphalt greater than three inches (3") in any dimension. If the Contractor cannot prevent rocks from accumulating at the top of the bedding during the backfill operation, then the City Engineer may require an additional twelve inches (12") of Class "B" bedding or select material be provided at no cost to the City. Material for the backfill from a plane two feet (2') above the bedding to the top of ground shall be free from rocks, stones, concrete or asphalt greater than eight inches (8") in any dimension. All Material shall be well graded and consolidated with a minimum of voids.

(c) IMPORTED BACKFILL MATERIAL. When a shortage of satisfactory backfill material occurs from a cause which is not the fault of the Contractor, as verified by the City Engineer, the Contractor shall furnish all necessary suitable material. The imported backfill material shall be inspected and approved by the City Engineer prior to import.

11.2.13 SEWER SERVICE LINES

Sewer service lines shall be four inches (4") in diameter unless otherwise specified on the plans, or by the Engineer. Material for sewer service lines shall be PVC having a minimum wall dimension ratio with an SDR rating of 35, meeting the requirements of ASTM D3033 or D3034 or better. Sewer services shall be connected to the main, not the manhole, and shall be a wye fitting or a tee fitting when the diameter of the service line exceeds one-half (½) the diameter of the sanitary sewer main. An approved multi-fitting saddle or wye with a lip may be used when the diameter of the service line is less than or equal to one-half (½) the diameter of the sanitary sewer main.

11.2.14 TRACER WIRE

All tracer wire and tracer wire products shall be domestically manufactured in the U.S.A.
All tracer wire shall have HDPE insulation intended for direct bury, color coated per APWA standard for the specific utility being marked.

(a) OPEN TRENCH. Tracer wire for open trenches shall be #12 AWG copper clad steel, high strength with minimum 450 lb. break load, with minimum 30 mil HDPE insulation thickness.

(b) DIRECTIONAL DRILLING/BORING. Tracer wire for directional drilling or boring shall be #12 AWG copper clad steel, extra high strength with minimum 1,150 lb. break load, with minimum 30 mil HDPE insulation thickness.

(c) PIPE BURSTING/SLIP LINING. Tracer wire for pipe bursting or slip lining shall be 7 x 7 stranded copper clad steel, extreme strength with 4,700 lb. break load, with minimum 50 ml HDPE insulation thickness.

(d) CONNECTORS. All mainline tracer wires must be interconnected in intersections, at mainline tees and mainline crosses. At tees, the three wires shall be joined using a single 3-way lockable connector (SnakeBiteTM or approved equal). At crosses, the four wires shall be joined using a 4-way connector. Use of two (2) 3-way connectors with a short jumper wire between them is an acceptable alternative.

Direct bury wire connectors. Shall include SnakeBiteTM 3-way lockable connectors (or approved equal) and mainline to lateral lug connectors specifically manufactured for use in underground tracer wire installation. Connectors shall be dielectric silicon filled to seal out moisture and corrosion and shall be installed in a manner to prevent any uninsulated wire exposure.

Non-locking friction fit, twist on or taped connectors are prohibited.

(e) TERMINATION/ACCESS. All tracer wire termination points must utilize an approved tracer wire access box (above ground access box or grade level/in-ground access box as applicable), specifically manufactured for this purpose.

All grade level/in-ground access boxes shall include a dual terminal, switchable lid (SnakePit LD14G2T-SW or approved equal), be appropriately identified with “sewer” cast into the cap, and color coded per APWA standard for the specific utility being marked.

A minimum of two feet (2’) of excess/slack wire is required in all tracer wire access boxes after meeting final elevation.

All tracer wire access boxes must include a manually interruptible, conductive/connective link between the terminal(s) for the tracer wire connection and the terminal for the ground rod wire connection.

Ground wire shall be connected to the identified (or bottom) terminal on all access boxes.

(f) Service Laterals on public property. Tracer wire must terminate with a coil of six feet (6’) of tracer wire for future extension to the building, located at the edge of the road right-of-way, and out of the roadway. Termination/Access boxes must be installed at the first south or east sanitary sewer service stub located from the downstream manhole for each block in new subdivisions.

(g) Service Laterals on private property. Tracer wire must terminate at an approved above-ground tracer wire access box, affixed to the building exterior directly above where the utility enters the building, at an elevation not greater than five (5) vertical feet above finished grade, or terminate at an approved grade level/in-ground tracer wire access box, located within two (2) linear feet of the building being served by the utility.

(h) Long-runs, in excess of 2,500 linear feet. Tracer wire access must be provided utilizing an approved grade level/in-ground tracer wire access box, located at the edge of the road right-of-way and out of the roadway. The grade level/in-ground tracer wire access box shall be delineated using a minimum 48" polyethylene marker post, color coded per APWA standard for the specific utility being marked or another approved marker by the City of Pueblo.

(i) GROUNDING. Tracer wire must be properly grounded at all dead ends/stubs.

Grounding of tracer wire shall be achieved by use of a drive-in magnesium ground rod with a minimum of 20 feet of #12 red HDPE insulated copper clad steel wire connected to a node (minimum 1.5 lb.) specifically manufactured for this purpose and buried at the same elevation as the utility.

When grounding the tracer wire at dead ends/stubs, the ground rod shall be installed in a direction 180 degrees opposite of the tracer wire, at the maximum possible distance.

When grounding the tracer wire in areas where the tracer wire is continuous and neither the mainline tracer wire or the ground rod wire will be terminated at/above grade, install the ground rod wire directly beneath and in-line with the tracer wire. Do not coil excess wire from the ground rod wire. In this installation method, the ground rod wire shall be trimmed to an appropriate length before connecting to the tracer wire with a mainline to the lateral lug connector.

Where the ground rod wire will be connected to a tracer wire access box, a minimum of two feet (2') of excess/slack wire is required after meeting final elevation.

(j) Prohibited Products and Methods. The following products shall not be allowed or acceptable:

(1) Uninsulated tracer wire
(2) Tracer wire insulations other than HDPE
(3) Tracer wires not domestically manufactured
(4) Non-locking, friction fit, twist on or taped connectors
(5) Brass or copper ground rods
(6) Wire connections utilizing taping or spray-on waterproofing
(7) Brass fittings with tracer wire connection lugs

(k) Approved Products and Methods. The following products have been deemed acceptable and appropriate. These products are a guide only to help you choose the correct applications for your tracer wire project.

(1) Copper-Clad Steel (CCS) Tracer Wire or approved equal.
(2) Open Trench. Copperhead #12 High Strength part # 1230G-HS or approved equal.
(3) Directional Drilling/Boring. Copperhead Extra High Strength part # 1245G-EHS or approved equal.

(4) Pipe Bursting/Slip Lining. Copperhead SoloShot Extreme Strength 7 x 7 Stranded part # GPBX- 50 or approved equal.
(5) Connectors Copperhead. 3-way locking connector part # LSC1230C or approved equal.
(6) DryConn 3-way Direct Bury Lug: Copperhead Part # 3WB-01 or approved equal.
(7) Termination/Access
(8) Non-Roadway access boxes applications: Tracer wire access boxes grade level Copperhead 3-way Direct Bury Lug adjustable lite duty Part # LD14G2T-SW or approved equal.
(9) Concrete / Driveway access box applications: Tracer wire access boxes grade level Copperhead Part # CD14G2T-SW or approved equal.
(10) Grounding. Drive in Magnesium Ground Rod: Copperhead Part # ANO-12 (1.5 lb.) or approved equal.
(11) Manufacturer Product Options: Copperhead products or approved equal.

11.3 CONSTRUCTION REQUIREMENTS

11.3.1 WATER LINE AND STORM SEWER CROSSINGS

Where sanitary sewer mains cross water mains, storm sewers or other non-potable lines, the sanitary sewer pipe shall be a minimum of eighteen inches (18") clear distance vertically below the water main or storm sewer. If this clear distance is not feasible, the pipe section must be designed and constructed so as to protect the water main or storm sewer. Minimum protection shall consist of the installation of an impervious and structural sewer. For example:

(a) REINFORCED CONCRETE ENCASEMENT. The sanitary sewer pipe shall be reinforced with a reinforced concrete encasement. The encasement shall be at least six inches (6") thick and extend a distance of ten feet (10') on either side of the water main or storm sewer. See *Section 11.3.11 - PIPE BEDDING LIMITS, REINFORCED CONCRETE ENCASEMENT*.

(b) JOINT CENTERING. The sewer shall be constructed such that one length of pipe, at least eighteen feet (18') long, shall be centered over the water main or storm sewer. Joints between the sewer pipe and special length pipe (18' section of pipe) shall be encased in a concrete collar at least six inches (6") thick and extending at least six inches (6") on either side of the joint.

In all cases, proper soil compaction, suitable backfill or other structural protection shall be provided to preclude settling and/or failure of either pipe.

11.3.2 RAILROAD AND HIGHWAY CROSSINGS

At all railroad and highway crossings, extreme care shall be exercised to safeguard life and property. All sewer work under and adjacent to railroads and highways shall be accomplished to the satisfaction of a representative of the railroad company and/or the Colorado Department of Transportation (CDOT) and the Engineer. The Contractor shall obtain at his own expense all permits, bonds, and insurances necessary for the execution of this work, and/or required by the appropriate railroad or CDOT. Contractor shall submit a plan for approval for crossing railroads or highways unless otherwise shown on drawings.

11.3.3 EXCAVATION - GENERAL

All excavation for sewer and/or manhole construction will be considered as unclassified excavation. The contractor shall make his own estimate of the type and extent of the various

materials which will be encountered in the excavation.

All excavation shall be done by open cut from the surface except when boring is expressly herein permitted or directed in writing by the Engineer. Trenches shall be excavated along the lines and to the grades established by the Engineer. In no case, without previous written consent from the Engineer, shall more than five hundred feet (500') or one (1) block whichever is less, of trench be opened in one place in advance of the completed and backfilled sewer. All open cuts shall be backfilled and barricaded at the end of each day except the unfinished end of the conduit, which may be left unbackfilled to permit continuation the next working day.

Width of the trenches shall be kept to a minimum, but provide safe and adequate space for workers . Contractor shall be responsible for protecting the existing utilities and property. Contractor shall comply with all Local, State and Federal Health and Safety requirements including but not limited to the deposition of cut, sloping, and/or bracing. The cost to meet these safety requirements shall be included in the respective bid items.

The Contractor shall barricade all excavations and ditch lines as specified in the *Manual on Uniform Traffic Control Devices (MUTCD).* The Engineer may require additional barricades at their discretion. At the end of each day the Contractor shall remove all excess excavated material from travel ways, and thoroughly clean all streets, alleys, driveways, and sidewalks affected by the excavation. If it becomes necessary to accomplish this, all streets, driveways, alleys (if asphalt), and sidewalks shall be swept or washed as needed.

Excavation shall conform to *ARTICLE 7 – EARTHWORK, Section 7.3.2 General Excavation.*

11.3.4 TRENCH EXCAVATION - WIDTH AND DEPTH

The width of the trench shall provide adequate space for workers to place, joint, and bed the pipe properly.

The minimum width of the trench from a plane six inches (6") below the pipe to a plane twelve inches (12") above the pipe shall be a minimum of nine inches (9") clear on each side from the undisturbed edge of the trench wall to the outside diameter of the pipe. This minimum trench width shall also be used for the measurement of trenches in rock.

To protect the pipe from external loads in excess of those used in the design of the pipe, it is necessary to limit the width of the lower portion of the trench below an elevation 12 inches above the top of the installed pipe to 6” below the invert of the pipe. The trench from a plane six inches (6") below the pipe to a plane twelve inches (12") above the pipe shall be excavated so the trench walls are as close to vertical as possible. The maximum trench width within this zone will not be limited but shall be kept as narrow as possible.

When using a movable trench support, care shall be exercised not to disturb the pipe location, jointing or bedding material. Any voids left in the bedding material by support removal shall be carefully filled with additional bedding material and properly tamped. The width and slope of the trench from a plane twelve inches (12") above the pipe to the top of the ground shall be determined by the Contractor. Considering factors shall include, but not be limited to; all safety requirements; type of material being excavated; equipment used; widths of dedicated right-of-ways; and adjacent structures, properties, and utilities.

The trench bottom shall be constructed to provide a firm, stable and uniform support for the full length of the pipe. Except in ledge rock, water bearing earth, or where a special pipe bedding is called for in the contract documents, the rough excavation of trenches shall extend no less than four inches (4") nor more than six inches (6") below the bottom of the pipe.

Correction of a trench grade that is too low shall be done by compacting select material of the

types designated by the Engineer, over the entire width of the trench to 95% of AASHTO T99. Such work required due to over excavation will not be included for payment.

Trench excavation shall meet the requirements of *ARTICLE 7 – EARTHWORK, SECTION 7.3.2(5) TRENCH EXCAVATION.*

11.3.5 HANDLING EXCAVATED MATERIAL

The material excavated from trenches, which is suitable for backfill, shall be kept so as not to significantly alter drainage flow patterns, endanger the work and to be of as little inconvenience as possible to the traveling public and the occupants of the abutting properties. Free access must be maintained at all times to driveways, fire hydrants, water valves, gas valves, existing manholes, etc., in the vicinity of the work.

Where lines are located in alleys or in any other case where the Contractor proposes to deposit material on private property, written permission shall be obtained from the owner of the property prior to placing any material on the property. The Contractor shall be held responsible for any damage to private property.

Materials encountered during clearing of the right-of-way and excavation of the trench such as rubbish, organic material, abandoned foundations and any other material which are not satisfactory for use as backfill in the opinion of the Engineer, shall be removed from the site and disposed of by the Contractor at his own expense.

11.3.6 UNSTABLE SUBGRADE

Where unstable subgrade conditions are encountered, as determined by the Engineer, the Contractor may be required to excavate below subgrade elevation and backfill the unstable area with material as per *Section 11.2.12 - TRENCH STABILIZATION MATERIAL.* The material approved by the Engineer shall be used to an elevation six inches (6") below the bottom of the pipe. Any extra depth of excavation and backfill shall be as ordered by the Engineer, and only when ordered by the Engineer.

If the unstable condition is a result of the Contractor not properly protecting his work from surface water infiltration, or from sewer or water lines damaged or broken by the Contractor, the cost shall be borne by the Contractor. If the unstable soil condition is the result of ground water infiltration and other causes beyond the control of the Contractor, the extra foundation material ordered by the Engineer will be paid for.

Unstable subgrade shall meet the requirements of *ARTICLE 7 – EARTHWORK, SECTION 7.3.2(5)(c) REMOVAL OF UNSTABLE MATERIAL.*

11.3.7 TRENCHES IN ROCK

Rock will be defined as any naturally occurring or manmade material in such a form that it cannot be readily removed using the equivalent of a 165hp/40,000lb operating weight track-type tractor (bulldozer) with a ripper or a 188hp/63,000lb operating weight hydraulic excavator (crawler mounted backhoe) with “rock teeth” without a significant loss of production. It also includes boulders exceeding one-half (½) cubic yard in volume.

Whenever rock material is encountered in an excavation, the Contractor shall immediately notify the Engineer for field verification. The Engineer shall measure and document the limits of the rock prior to excavation. Any rock removed prior to notification will not be considered for payment. After rock has been measured, trenching shall continue by such means as may be necessary, to a depth of six inches (6") below the outside bottom of the pipe, and to a width in

conformance to *Section 11.3.4 - TRENCH EXCAVATION - WIDTH & DEPTH.*

Blasting for rock excavation will only be allowed with written permission from the Engineer and Fire Chief. The Contractor shall exercise the utmost care to protect the public from harm and to avoid property damage. Blasting shall be done by a State licensed blaster. The Contractor shall comply with all laws, ordinances, insurance, bonding, and applicable safety code requirements and regulations and shall be responsible for all damage caused by the blasting operations. Signals warning persons of danger shall be given before any blast.

Blasting shall be controlled so as to not make any excavation unduly large or irregular. Excessive blasting or overshooting shall not be permitted. The Engineer shall have the authority to order any method of blasting which leads to overshooting or is dangerous to the public or destructive to property or to natural features discontinued. Approved blasting blankets shall be used for all blasting.

11.3.8 QUICKSAND AND GROUNDWATER INFILTRATION

Should running sand, quicksand or groundwater be encountered, the work shall be pushed with the utmost vigor. Groundwater encountered in trench or manhole excavations shall be drained to sumps, through sub-drains, or by other methods to keep the water level below the bottom of the bell of the pipe while joints are being made. Dispose of the water in a manner to prevent damage to adjacent properties . Drainage of groundwater through any sanitary sewer pipeline is prohibited. All dewatering and trench stabilization methods and types of equipment used shall be approved by the Engineer.

If dewatering and trench stabilization is required as a result of the Contractor not properly protecting his work from surface water infiltration, or from sewer or water lines being damaged or broken by the Contractor, the cost shall be borne by the Contractor. In the event such work is required through no fault of the Contractor, it shall be considered extra work and a price shall be negotiated.

11.3.9 EXCAVATION FOR STRUCTURES

Excavation for manholes, and miscellaneous structures shall consist of the removal of all material necessary for construction of the work in conformity with the plans and these specifications.

If rock is encountered, the excavation shall be done in such a manner as to allow the rock to be exposed and prepared for receiving the concrete. All loose and disintegrated rock or thin strata shall be stripped to a clean bed acceptable to the Engineer and in conformance to all applicable items as described in *Section 11.3.7 - TRENCHES IN ROCK*.

Whenever the footing is to rest on any excavated surface other than rock, special care shall be taken not to disturb the bottom of the excavation (subgrade), and the final finishing of the surface shall not be done until just before the footing is to be placed. Correction of any over excavated areas shall be at the Contractor's sole expense.

Whenever the subgrade soil is not sufficiently firm, the Contractor is to furnish and compact, according to the direction of the Engineer, select material, as may be required and in conformance to all applicable items as described in *Section 11.3.6 - UNSTABLE SUBGRADE*.

After each excavation is completed, the Contractor shall notify the Engineer, who shall inspect the depth of the excavation and the character of the foundation material. No concrete shall be placed until after the Engineer has approved the depth of the excavation and character of the foundation material.

An Excavation Permit is required for any underground work within the City of Pueblo. The “for-fee” permit shall be obtained from the City Streets Division at 211 E. “D” Street. Any work placed without the benefit of this permit will not be paid for.

11.3.10 PIPE BEDDING LIMITS

Unless stated otherwise on the plans or details or ordered by the Engineer, all pipe shall be bedded in accordance with Class "B" bedding as described below. All classes of bedding shall be properly tamped around the lower half of the pipe (haunches) and horizontally away from the pipe in both directions to the undisturbed trench walls.

(a) CLASS “A” CRADLE BEDDING. The lower part of the pipe exterior shall be bedded in Class "A" bedding material having a thickness under the pipe of one-fourth (1/4) the outside diameter of the pipe or a minimum of six inches (6"), whichever is greater, and extending up the sides of the pipe for a height equal to one-fourth (1/4) of the outside diameter of the pipe. The cradle shall have a minimum width equal to the outside diameter of the pipe plus eight inches (8") and it shall be constructed monolithically without horizontal construction joints. Backfill above the cradle, extending twelve inches (12") above the top of the pipe and the full width of the trench shall be Class "B" bedding material.

(b) CLASS “B” CRADLE BEDDING. The sewer pipe shall be set on a minimum of six inches (6") of Class "B" bedding material carefully shaped to fit the lower part of the conduit exterior for a width of at least 60% of the pipe breadth and for the entire pipe length. After setting the sewer pipe, Class "B" bedding shall be added and properly tamped around the lower half of the pipe (haunches) for the full width of the trench, and the bedding shall be consolidated carefully without disturbing the pipe alignment or grade. Additional Class "B" bedding material shall be added up to a minimum of twelve inches (12") above the top of the pipe for the full width of the trench.

(c) REINFORCED CONCRETE ENCASEMENT. Concrete encasement shall have a minimum thickness of six inches (6") around the pipe. This encasement shall be formed on both sides to produce a rectangular shape and shall be reinforced as shown on the Standard Detail. When required, it shall extend a minimum distance of ten feet (10') on each side of a water main crossing or at the location and the dimensions as shown on the plans. Backfill adjacent to the encasement, extending the full width of the trench shall be class “B” bedding.

(d) REINFORCED CONCRETE ARCH. The pipe shall be embedded in class “B” bedding material having a minimum thickness of six inches (6”) between the barrel and the bottom of the trench excavation and extending to the springline (springline means the cross-section, horizontal centerline of the pipe) of the pipe. The top of the pipe shall be covered with a reinforced concrete arch having a minimum thickness of ¼ the outside diameter or four inches (4”) minimum, measured at the crown of the pipe and having a minimum width equal to the outside diameter plus eight inches (8”). When required, it shall be extended at the location and the dimensions as shown on the plans. Backfill adjacent to the concrete arch, extending the full width of the trench, shall be class “B” bedding.

11.3.11 PIPE LAYING

Pipe shall be protected during handling against impact shocks and free fall. Proper methods shall be used for handling and placing pipe to avoid spalling or breaking and to avoid unnecessary disturbance of the bedding surface in the trench bottom. Pipe shall be kept clean at all times and no pipe that does not conform to these specifications shall be used in the work.

Pipes shall be laid to a true line and at uniform rates of grade between manholes as shown on the plans. The laying of the pipe in prepared trenches shall commence at the lowest point with the spigot ends pointing in the direction of flow. No pipe shall be laid in water or when trench conditions are unsuitable for such work.

The Contractor shall take every precaution necessary to prevent dirt, debris or surface water from entering the existing lines or new construction. Contractor shall exercise reasonable diligence in preventing sewage from seeping into the ground during the removal and replacement of any sanitary sewer main. Best management practices shall be utilized to prevent such seepage of sewer water, which shall include, but are not limited to, the following:

(1) Minimize the amount of time sewer water is allowed to remain in trench.
(2) Channel water from the old pipe to the new pipe with a temporary pipe, impervious trough or gutter, whenever practical.
(3) Hard tie the newly laid pipe and existing pipe during holidays, weekends and nights unless a bypass is used.

All bypass pumping, temporary connections or other work needed to comply with this requirement shall be considered incidental to the sanitary sewer pipe and all costs in connection therewith shall be included in the unit price for the pipe, unless otherwise stated on the plans and specifications.

The Contractor shall submit a plan for handling existing sewage flows while rehabilitating the pipe at the pre-construction meeting for approval by the City. The bypass plan must be designed in accordance with the approved traffic control plans and identify the location of any pumping equipment, temporary discharge piping, pumping and discharge manholes, redundant pumps and piping, the location of nearby waterways or drainages, and the method for diverting runoff around the site. The Contractor shall be responsible to obtain all existing flow measurements in the sewer to determine a bypass plan. Precautions must be taken to ensure that sewage flow control operations do not cause damage to properties being served by the sewers involved. Raw wastewater shall not run freely through any open ditch. Bypass pumping will not be allowed during nonworking hours unless authorized by the Engineer. When 24-hour pumping operations have been approved by the Engineer in residential areas, attenuated pumps will be required to minimize noise disturbance. The Contractor shall provide 100% redundancy on any 24-hour pumping operation, near any waterways or any site deemed necessary by the Engineer. Bypass piping shall be placed in trenches and covered with temporary pavement or metal traffic covers when traffic conditions dictate the need for protection of the piping unless otherwise directed by the Engineer. The Engineer may specify additional design requirements based on specific site conditions.

Each bypass pumping system shall be hydrostatically tested using potable water prior to use. Unless otherwise indicated, water for testing bypass pipelines shall be furnished by the Contractor. The bypass pumping system may require air release valves to release air that may become trapped in the bypass system piping. The bypass pumping system shall be filled at a rate that will not cause any surges or exceed the rate at which air can be released through the air valves. The differential pressure across the orifices in the air release valves shall not be allowed to exceed 5 psi at any time during filling. Once the system has been successfully filled and all air purged, the piping system exclusive of the pump(s) shall be pressurized to 150% of the calculated working pressure, or 40 psi, whichever is greater, measured at the lowest point along the alignment, and hydrostatically tested for a minimum of 30 minutes. During the test, the entire system shall be visually inspected for leaks and monitored for pressure drops. Any leaks encountered shall be repaired at the Contractors cost, and the hydrostatic pressure test restarted until the system successfully passes the test. Potable water used during the test shall be discharged to the wastewater system at a controlled rate to prevent surcharging of the wastewater system and wastewater service lines.

If the City must provide personnel and equipment to minimize damages, in the event of any failure of the Contractor's sewage flow control operations, the Contractor shall be liable for all costs incurred by the City. The Contractor will be charged $550 per hour that the City of Pueblo crews are onsite, which will be deducted from the amount of the Contractor's final payment.

Service line wyes shall be placed on the sewer main at the points shown on the plans or where directed by the Engineer. The service lines shall be extended to the right-of-way line. All shall be per the requirements of *Section 11.3.14 - SANITARY SEWER SERVICE LINE INSTALLATIONS.*

(a) ALIGNMENT. All pipe shall be laid to the lines and grades given by the Engineer, with joints close and even, butting all around. They shall be carefully centered and shall not deviate more than one inch (1") from line so that when laid, the pipe will form a sanitary sewer with a uniform invert and a straight alignment, unless a specified curve alignment is shown on the plans.

The grade of the pipe shall be obtained by using batter boards and a "top line," batter boards with a double string line having a minimum of four feet (4') separation, a laser beam, or by the use of surveying instruments approved by the Engineer. The grade shall not be obtained by placing a carpenter's level on individual pipes.

If batter boards are used when pipe laying is in progress, the Contractor shall at all times maintain batter boards for a distance covering at least three grade stakes. The elevation of the batter boards shall be determined from the depth of cut as given by the Engineer, and the Contractor shall assign on each crew a person whose duty it shall be to see that the batter boards are in the proper place at all times. It is not intended that these requirements make it necessary for the Contractor to keep a person especially for this purpose, but to provide that a competent person shall be with each crew at all times whose duty it shall be to attend to the placing of the batter boards and the giving of grades to the pipe layer.

If a method other than batter boards is used, the instrument used shall be operated continuously under the supervision of a qualified foreman or superintendent. The pipe grade shall be checked by an alternate method at fifty-foot (50') intervals and upon request of the Engineer.

All PVC pipe shall be tested with a certified mandrel (go-no-go device) prior to construction of surface improvements.

(b) VERTICAL TOLERANCE. All pipe shall be installed within the following range of tolerances. Any pipe not within the specified spot elevation tolerance shall be re-laid.

PIPE GRADE TOLERANCE TABLE		
PIPE DIA. (INCHES)	**GRADE (S) (%)**	
	S≤ 0.50	**S>0.50**
8	±0.02 Ft	±0.04 Ft
10 – 15	±0.03 Ft	±0.04 Ft
18 or larger	±0.04 Ft	±0.04 Ft

In no case shall a section of pipe be accepted if it does not possess a positive grade (i.e., no flat or adverse sections).

(c) JOINTING PIPE. All pipe joints shall be made in the manner and under the conditions described under the various types of joints for the work. Prior to making pipe joints, all

surfaces of the portion of the pipe to be jointed shall be cleaned. All pipe joints shall be watertight when completed.

(1) ELASTOMERIC GASKET JOINTS – The assembly of the gasketed joint shall be performed in general conformance with the recommendations of the pipe manufacturer. The Contractor shall provide a suitable method of installation to ensure the pipe being entered is true and concentric with the previously laid pipe so as to prevent injury to the elastomeric gasket. When jointed, the pipe shall form a smooth and true pipeline.

(i) Mechanical methods shall be employed, if necessary, to pull or push the pipe together with sufficient force to compress the gasket sufficiently to make a watertight joint.

(2) SOLVENT CEMENTED JOINTS - Solvent cemented joints are not allowed on eight-inch (8") diameter and larger pipes unless otherwise approved by the Engineer, in writing. If approved, the assembly shall be made in accordance with ASTM D2855 standard practice. Remove dirt and mud from the bell and spigot. Apply primer liberally to the outside of the spigot and inside of the coupling. Immediately apply cement and make joint by shoving home with 1/4 rotation (within a minute).

(3) OTHER TYPE JOINTS - If any other type of joint is proposed to be used, it shall conform to the requirements of these specifications that apply, and the Contractor shall obtain written approval of the Engineer for its use. Connections to unlike materials must also be pre-approved, in writing, and may require Class “A” bedding (concrete cradle) at the connection joint. When joining pipe sections via a coupler, a Fernco Strong Back RC Series Repair Coupling or an approved equal shielded coupler shall be used to connect the existing to the new sewer pipe.

(d) TRACER WIRE. The work covered by this section of the specifications consists of the furnishing of all labor, supplies, equipment and materials and performing all operations in connection with the installation of tracer wire and appurtenances, as shown on the plans, as herein specified and directed by the Engineer to comply with Senate Bill 18-167. The bill requires that all new underground facilities, including laterals up to the structure or building being served, installed on or after August 8, 2018, must be electronically locatable when installed per section 9-1.5-103(10), C.R.S.

(1) Tracer wire installation shall be performed in such a manner that allows proper access for the connection of line tracing equipment, the proper locating of wire without loss or deterioration of low frequency (512Hz) signal for distances in excess of 1,000 linear feet, and without distortion of signal caused by multiple wires being installed in close proximity to one another.
(2) Tracer wire systems must be installed as a single continuous wire, except where using approved connectors. No looping or coiling of wire is allowed. Any damage occurring during installation of the tracer wire must be immediately repaired by removing the damaged wire and installing a new section of wire with approved connectors. Taping and/or spray coating shall not be allowed.
(3) Tracer wire shall be installed at the top of the pipe and secured (taped/tied) at 5' intervals.
(4) Tracer wire must be properly grounded as specified.

(5) Tracer wire on all service laterals/stubs must terminate at an approved tracer wire access box located directly above the utility, at the edge of the road right-of-way but out of the roadway. (See *TRACER WIRE TERMINATION/ACCESS*)
(6) At all mainline dead-ends, tracer wire shall go to ground using an approved connection to a drive-in magnesium ground rod, buried at the same depth as the tracer wire. (See *GROUNDING*).
(7) Mainline tracer wire shall not be connected to existing conductive pipes. Treat it as a mainline dead-end and ground using an approved waterproof connection to a ground rod buried at the same depth as the tracer wire.
(8) All service lateral tracer wires shall be a single wire, connected to the mainline tracer wire using an approved mainline to lateral lug connector, installed without cutting/splicing the mainline tracer wire.
(9) In occurrences where an existing tracer wire is encountered on an existing utility that is being extended or tied into, the new tracer wire and existing tracer wire shall be connected using approved splice connectors and shall be properly grounded at the splice location as specified.
(10) All service lateral tracer wires must be properly connected to the mainline tracer wire to ensure full tracing/locating capabilities from a single connection point. Lay mainline tracer wire continuously, by-passing around the outside of manholes/structures on the north or east side. Tracer wire on all sewer laterals must terminate at the property line with a coil of 6 feet of tracer wire taped directly to the service lateral at the edge of the road right-of-way or at an approved location.
(11) The City of Pueblo Wastewater Department must be contacted to inspect tracer wire installation prior to backfilling any infrastructure that connects to the City's sanitary sewer system.
(12) The following methods shall not be allowed:

(i) Looped wire or continuous wire installations, that has multiple wires laid side-by-side or in close proximity to one another
(ii) Tracer wire wrapped around the corresponding utility
(iii) Wire terminations within the roadway, i.e. in valve boxes, cleanouts, manholes, etc.
(iv) Connecting tracer wire to any conductive utilities

11.3.12 BACKFILLING

The line, grade, joints and bedding of the sanitary sewer shall be inspected and approved by the Engineer before backfilling operations commence.

If Class "A" Cradle Bedding or Reinforced Concrete Encasement has been constructed, no backfilling shall commence until the concrete has either attained a compressive strength of 2000 pounds per square inch, or seven (7) days have elapsed.

After the initial backfill (bedding) has been carefully placed in the pipe zone to at least one foot (1') above the top of the pipe, the remainder of the trench shall be backfilled and compacted. Depositing of the backfill material shall be done so that the impact of falling material will not damage the pipe or structures.

Permission to use specific compaction equipment shall not be construed as guaranteeing or implying that the use of such equipment will not result in damage to the adjacent ground, existing improvements, or improvements installed under the contract. The Contractor shall make their own determination in this regard.

The Contractor shall employ whatever equipment and methods are necessary to obtain the

moisture and required density. All soils within the compaction limits shall be compacted to ninety-five percent (95%) of the maximum dry density as defined by AASHTO T99 (Standard Proctor). Moisture content for all compacted soils shall be within plus or minus 2% of the optimum unless field observation verifies that the soils are unstable at lesser moisture contents. In those cases, the Engineer shall establish a minimum moisture content.

On all sewer installations, compaction tests shall be made by an approved, independent testing laboratory and shall identify the location and depth of the test, the date of the test, the maximum Standard Proctor density and optimum moisture content of the soil, and give the percent of compaction and moisture content of the backfill material at the test location. Compaction tests shall be made at a depth of three feet (3') above the top of the pipe and at two-foot (2') intervals in depth, up to and including the surface. Testing shall be done at a minimum of one location for every 250 feet of main line trench or a fraction thereof and at every manhole or similar structure. Where excavations for service lines branch off the main trench, every fourth service line trench shall be tested.

All test locations shall be randomly spaced as directed by the Engineer. These tests shall be made at the expense of the Contractor and are intended to give the Contractor and City an indication of the effectiveness of the compaction procedure and shall not relieve the Contractor of any provisions of this specification. **All Compaction tests shall be submitted and accepted by the City prior to the construction of any surface improvements.**

If any compaction test should fail to meet the requirements of this section, at least two (2) additional locations shall be tested along the trench, at locations designated by the Engineer, to determine the extent of the non-compliance. After the extent of non-compliance has been determined, that section of trench shall be re-compacted and retested at a minimum of two (2) locations as directed by the Engineer. If the failure occurs at a service lateral, another lateral shall be tested in addition to the non-compliance testing requirements.

In the event of settlement or subsidence of a particular excavation or any part thereof, the Contractor shall be responsible for all repaving, overlay and repair costs occasioned thereby for a period of two (2) years after the project/subdivision acceptance date.

If requested by the Contractor/Developer, and written permission is granted by the City Engineer, backfill for utility trenches may be consolidated using water induced settlement techniques (jetting/puddling). This method of trench backfill consolidation shall only be allowed in those special locations where a failure history exists for trenches using conventional engineered controlled fill. As a condition of permission to use jetting/puddling, the Contractor/Developer must agree in writing to provide a full and complete three (3) year warranty from the final acceptance date, that shall include the repair of any surface amenities to the complete satisfaction of the City which may include a full width asphaltic overlay if warranted.

Where backfill for utility trenches within the roadway section are consolidated using jetting/puddling, the moisture and density requirements within the trench compaction limits stated above shall not apply; however, the compaction limits for the finished roadway subgrade as outlined under *ARTICLE 7 - EARTHWORK* shall apply.

11.3.13 MANHOLE CONSTRUCTION AND ADJUSTMENT

Manhole bases and barrels shall be constructed of the material as specified in *Section 11.2 - MATERIALS*, unless otherwise specified on the plans or by the Engineer. Contractor shall wait a minimum of twenty-four (24) hours before setting manhole barrel sections on cast-in-place bases. No backfilling shall commence around the manhole bases until the concrete has either attained a compressive strength of 2,000 pounds per square inch, or seven (7) days have

elapsed.

The flow channel shall be made to conform in slope and shape to that of the sewer pipe and wherever possible, the lower one-half of the sewer pipe shall be used for the invert of the open flow channel. At intersections with other lines, channels shall be formed with a sweeping curve to minimize turbulence.

When branch mains are being connected to a manhole with collector or backbone mains, the smaller pipe diameter, the branch main, invert must be higher than the larger pipe, the collector or backbone main, to avoid any interruption in flow in the branch main, per *City of Pueblo Sanitary Sewer Design Criteria Manual Table 4.3 Design Depth of Flow*. Unless otherwise specified on the plans or specifications, all manhole channels shall be constructed with a minimum elevation drop as shown:

HORIZONTAL DEFLECTION ANGLE OF SEWER PIPE AT MANHOLE	MINIMUM DROP
0°	0.10' *
Between 0° & 45°	0.20'
45° to 90°	0.30'

Changes in direction at the intersections of sewers shall not be greater than 90 degrees.

* The minimum drop at a manhole with a 0-degree pipe deflection can be less than 0.10 feet when the grades of the pipe entering and exiting the manhole are the same and the pipe is laid continuously through the manhole, using the bottom half of the pipe as the channel.

Connection to an existing manhole shall be made so that the inlet flowline is above the existing concrete manhole base. When connection to an existing manhole is allowed, the contractor shall cut into the existing manhole to install the new sewer pipe and provide a water stop and non-shrink grout for a watertight connection. A concrete channel shall be formed within the existing manhole to provide a smooth discharge from the new pipe to the existing channel.

An external drop manhole shall be constructed when the difference between the elevation of the inlet and outlet flowlines is two feet (2') or greater. Internal drop manhole assemblies will not be allowed. See *Manhole Base Section with Drop Assembly Detail, SD24.* Epoxy coating of the manhole may be required at the discretion of the Engineer due to high hydrogen sulfide production from excessive drop distances, per *Section 4.14 of the city of Pueblo Sanitary Sewer Design Criteria Manual.*

When pipe is used as the channel in manholes, no pipe joint shall be allowed in the manhole unless otherwise specified on the plans. Dead end manholes shall have a channel extended a minimum of three feet (3') inside the manhole at the same grade as the sewer pipe.

All manhole ring and covers in streets to be paved shall initially be constructed to a height to the top of the subgrade or twelve inches (12") below the proposed finished pavement grade, whichever is less. When adjusted to a finished pavement grade, the manhole ring and cover shall be constructed so that the top of the manhole ring and cover will be flush (± 1/4") with the replacement pavement or the grade established by the Engineer, and shall have at least one (1) four inch (4") thick precast concrete or high density polyethylene adjustment ring. Adjustment rings shall not exceed twelve inches (12") in height. High density polyethylene adjustment rings must be pre-approved by the Engineer before use and be rated for HS-20 loading.

Contractor shall salvage rings and covers removed from existing manholes. Rings and covers

shall become the property of the City.

When connecting to an existing manhole with rebar steps, the steps shall be removed by cutting them flush with the wall of the manhole. Where rebar steps are removed, the exposed rebar ends shall be sealed with a Rustoleum Enamel Paint or an approved equal.

When trenchless methods are used to rehabilitate manholes, the interior surface of the manholes will be coated with 100% solid, self-priming, ultra-high build epoxy applied to a minimum thickness of 125 mils with an airless spray gun applicator. To ensure a 125 mils thickness, a wet film thickness gauge shall be used to verify thickness during the application process. A micro-gauge may be used after application to ensure no shrinkage has occurred after the curing process. The contractor may have an ultrasound on hand to show thickness is being met. Apply epoxy coatings in accordance with the manufacturer's instructions. The epoxy coating shall completely cover all manhole walls and bases to the low flow line of the pipe, unless otherwise directed by the Engineer, to ensure a seal from outside water sources. The Contractor shall sawcut a line, "key", between the metal frame and concrete of the manhole wall. The finished surface on all components of the manhole will be smooth and free of sags, ridges, skips, voids, and pinholes.

A *"Manhole Coating"* form must be submitted for each manhole. The form must be submitted at the Pre-Construction Conference for approval. The Contractor may elect to use a form provided by the City of Pueblo. The report shall be submitted to the engineer within one week of completion of testing or as directed by the City for review of the application process. The coating inspection report shall document: project and manhole identification, coating material, dry film thickness and holiday tests results, adhesion testing results if applicable, and City Engineer's signature to verify test results.

Manholes constructed in areas with excessive groundwater tables or in areas identified as having high concentrations of selenium and/or sulfate in the groundwater, as determined by the City Engineer, will be required to be epoxy coated to eliminate any infiltration.

11.3.14 SANITARY SEWER SERVICE LINE INSTALLATIONS

Service lines shall be installed from the main to the right-of-way line or as shown on plans. Connections to manholes are prohibited unless otherwise approved by the Engineer. Lines shall be inspected and approved by the Engineer or designated entity.

Service lines shall be connected to the sewer main, so that the flowline is at or above the spring line of the pipe for 8" and 10" sewer mains and in the top 1/4 of the pipe for 12" and larger sewer mains. Service lines shall not be connected to the City mainline manholes unless otherwise approved by the Engineer.

Sewer service lines shall not protrude into the interior of the sanitary sewer main. Service lines shall connect to the sanitary sewer main in a manner that creates a watertight joint and provides a smooth, continuous interior pipe surface.

All service lines shall be placed on a slope of one-fourth inch (1/4") per one foot (1') from the main to the property line, unless otherwise specified on the plans, standard details or in writing by the Engineer.

The ends of all service lines shall be plugged and marked for location with a 2" x 4" board or other suitable marker extending two feet (2') above grade and three feet (3') below grade in addition to a three inch (3") wide, green, plastic tape tied to the end of the service line and extending to a point six inches (6") above the ground surface. The Contractor shall assist the

Engineer in measurements and locations of constructed service lines and submit "as built" plans.

When reinstating an existing PVC service via an open trench, the Contractor shall use a hard tie, polyvinyl chloride (PVC) fitting. All other services shall be reinstated using a Fernco Strong Back RC Series Repair Coupling or an approved equal, shielded coupler to connect the existing pipe to the new service pipe. The Contractor shall be responsible for all costs incurred for a service line tap not properly located, to include but not limited to excavation and restoration of the missed service.

Bedding shall meet the requirements of Class "B" as per *Section 11.2.11 – BEDDING FOR PIPE, and Section 11.3.10 – PIPE BEDDING LIMITS* and the backfill material shall be similar to that required for sanitary sewer mains as per *Section 11.2.13 – BACKFILL MATERIAL*. All backfill shall be consolidated by the requirements of *Section 11.3.12 – BACKFILLING.*

11.3.15 TESTING AND INSPECTION

No surface improvements shall be constructed over the new sanitary sewer until all testing and televised inspection of the pipe is accepted by the City, unless otherwise authorized by the City. The Contractor shall conduct the testing and be responsible for furnishing all equipment and labor for testing. The Engineer shall verify the accuracy and acceptability of the equipment used and witness all tests.

Any sanitary sewer line where infiltration or exfiltration tests show leakage in the sewer line and/or manholes exceeding fifty (50) gallons per inch diameter, per mile, per day or pipe deflection exceeding five percent (5%) of the inside diameter, will not be accepted. After acceptable backfilling but before construction of surface improvements over any sewer line, tests shall be run to determine whether these limits are exceeded. At the direction of the Engineer, the section between the first two (2) manholes of all projects may be tested before further construction to permit initial observation of the quality of the construction workmanship. Tests shall also be conducted at any time during construction when in the opinion of the Engineer, the quality of the workmanship is questionable. The type of test conducted shall be at the Engineer's discretion . Whenever the rate of infiltration, exfiltration or deflection is found to exceed the allowable amounts, the Contractor shall stop construction. The Contractor may then be required to provide, at their own expense, televised or photographic visual inspection of the interior of the pipe to help determine the reason for failing the testing. The Contractor shall make the appropriate repairs by methods approved by the Engineer and shall retest the sewer until it is satisfactory. No compensation shall be paid to the Contractor for testing, televising, photographing, repairing, or reconstruction to comply with the allowable amounts.

All gravity sewers will be inspected by closed-circuit television, by the City, after other utility installations and acceptance of all testing, but prior to construction of surface improvements over the new sewer unless otherwise authorized by the City. The Contractor shall thoroughly clean all sewers prior to televising by the City. The City requires five (5) working days advance notice for scheduling the televising and will be allowed five (5) working days to complete the television inspection.

(a) INFILTRATION. In areas where excessive groundwater is encountered or in areas identified as having high concentrations of selenium and/or sulfate in the groundwater, an infiltration test or pneumatic pressure test will be required. An excessive amount of groundwater for testing purposes is defined as the amount of groundwater needed to produce over two feet (2') of hydrostatic pressure on the crown of the pipe along the entire test section. The Contractor will be required to prove this by installing manometer tubes at the ends of the test section in the manholes. The determination of groundwater elevation (installation of manometer tubes) shall be in accordance with *Section 8, of the*

Uni-Bell Plastic Pipe Association - Recommended Practice for Low-Pressure Air Testing of Installed Sewer Pipe (Uni-B-6). If infiltration is less than the allowable amount, the Contractor will still be required to stop any obvious individual leaks that may be observed by the Engineer when so directed.

(1) INFILTRATION TEST. Infiltration tests shall be made by plugging the end of the sewer section being tested at the upper manhole to prevent the entry of water. The amount of infiltration shall then be measured by placing an approved weir in the lower part of the outlet end of the test section. The time for the test shall be of such duration as necessary to achieve stable flow over the weir, but in no case less than two hours. Determination of flow will be made by the direct reading of a calibrated weir or by hydraulic calculations taken at ten-minute intervals beginning after the first hour of lapsed time.

(2) PNEUMATIC PRESSURE TEST. In preparation for a pipe acceptance test using low pressure air, all pneumatic plugs shall be seal tested before being used in the actual test installation. One length of pipe shall be sealed at both ends with the pneumatic plugs to be checked. The plugs, installed in accordance with the manufacturer's recommendations, shall hold against a pressure of five (5) pounds per square inch gauge (psig) without bracing and without movement of the plugs out of the pipe. However, during actual testing, the Contractor should internally or externally brace the plugs as an added safety precaution. Plugs found acceptable by this testing shall be placed in the test installation and low-pressure air introduced into the sealed line until the internal air pressure reaches four (4) psig greater than the average back pressure of any groundwater that may be over the pipe but not greater than nine (9) psig. The level of groundwater back pressure shall be determined by averaging the readings of groundwater manometer tubes installed at the manholes of the section of pipe being tested. The air pressure correction, which must be added to a 3.5 psig test starting pressure, shall be calculated by dividing the average vertical height, in feet of groundwater above the invert of the pipe to be tested by 2.31. At least two (2) minutes shall be allowed for the air pressure to stabilize. After the stabilization period, the air hose from the control panel to the air supply shall be disconnected and the pressure shall be decreased to 3.5 psig (plus any required air pressure correction) for the start of timing. The portion of line being tested shall be termed "Acceptable" if the time shown, for the given diameters in the following table, elapses before the air pressure drops 0.5 psig from the test starting pressure.

PIPE DIA. (inches)	MINIMUM TIME (min:sec)	LENGTH (L) FOR A MINIMUM TIME (feet)	TIME FOR LONGER LENGTH (sec)
8	3:47	298	0.760L
10	4:43	239	1.187L
12	5:40	199	1.709L
15	7:05	159	2.671L
18	8:30	133	3.846L
21	9:55	114	5.235L
24	11:20	99	6.837L
27	12:45	88	8.653L

Contractors testing equipment shall have 3/8 inch standard female fitting to accommodate the City inspector's gauge and a regulator or a relief valve set no greater than nine (9) psig to avoid over-pressurizing.

(b) EXFILTRATION. Except in areas where excessive amounts of groundwater are encountered, the Contractor shall measure the rate of exfiltration by either a hydrostatic pressure test or a pneumatic pressure test (as outlined above).

(1) HYDROSTATIC PRESSURE TEST. The section to be tested shall be prepared by plugging the lower end of the section and the inlet sewer or sewers of the upper manholes and filling the pipe and upstream manhole with water to a depth of two feet (2') above the top of pipe at the upstream manhole of the test section or two feet (2') above the normal ground water level at the upstream manhole of the test section, whichever is greater. The maximum internal pipe pressure at the lowest end shall not exceed twenty-five feet (25') of head of water or 10.8 psi. Only after the test section has been acceptably isolated and filled with water can the test period begin. The period shall be two hours in duration. Leakage by exfiltration shall be determined by measuring the drop in the water level in the upstream manhole at the end of the test period. The exfiltration test time period may be extended beyond the minimum two-hour period when necessary to effectively determine the source of leakage when test results are unsatisfactory.

(c) DEFLECTION TESTING. All PVC pipe less than twenty-four inches (24") in diameter shall be tested for deflection, after backfilling, by the Contractor by means of a certified mandrel (go-no-go device). The diameter of the mandrel shall be five percent (5%) less than the inside diameter of the sewer pipe. The mandrel shall be pulled through all installed pipes. All testing shall be under the direction of the Engineer.

Pipe shall be removed, replaced and retested if maximum deflection exceeds five percent of the pipe's nominal internal diameter. Pipe shall be retested for deflection by the City of Pueblo prior to the end of the two-year warranty period. Any pipe showing a deflection in excess of five percent (5%), after testing by the City, shall be removed and replaced by the Contractor.

(d) ACCEPTANCE. Acceptance of the pipe in the tested section will be granted by the Engineer only after all defects such as poor alignment, misplaced pipe, and broken pipe have been remedied, and prescribed testing satisfactorily completed. Acceptance of the pipe does not relieve the Contractor of responsibilities imposed by all other sections of these specifications.

Work accomplished under this section will not be measured, nor will it be paid for directly. This work will be considered as incidental to the sanitary sewer pipe and all costs in connection therewith shall be included in the unit price for the pipe.

(e) MANHOLE TESTING. After the epoxy coating has cured in manholes, it shall be inspected and tested per NACE (National Association of Corrosion Engineers) RP0188 specifications.

(1) Holiday Testing. Every manhole shall be tested using high voltage holiday detection equipment (a spark tester). An induced holiday shall be made into the coated concrete surface and shall serve to determine the minimum/maximum voltage to be used to test the coating for holidays in that particular area. The spark tester shall be initially set per manufacturer’s specification but may be increased if it

is insufficient to detect the induced holiday. All detected holidays shall be marked and repaired per the manufacturer's recommendations.

The Contractor shall submit test results to the Engineer no later than one (1) week after testing the epoxy coating. Approved test results shall include test results, date tested, location of the test and shall be signed by the inspector. No payment shall be made for any manhole prior to manhole forms being submitted.

A failed manhole will have one (1) or more sparks in a single vertical foot. Any pinholes, thin areas, or any other imperfections identified by the holiday test will require a repair per the manufacturer's specifications.

(2) Adhesion Testing. The Contractor shall conduct adhesion testing in accordance with ASTM D4541 and D7234. Three-20-mm dollies will be placed on the bottom, middle and top of the manhole. Prepare dollies with a 3,500 psi strength 24 -hour adhesive and score around the dolly for the testing process. If results fail to meet the results in the table found in the *Epoxy Coating Table, Section 11.2.6 (b),* the test will be considered failed. If two out of three tests fail, additional tests will be performed. Testing will include 25% of the manholes in the Project picked at random. During the testing, if more than 50% of manholes fail of those initially tested, ALL manholes in the Project will be subject to testing or as directed by the Engineer. If subsequent tests fail, all manholes could be considered unacceptable and will be subject to removal and reapplication of epoxy. The Contractor shall repair all test sites after adhesion tests have been performed. No additional cost to the project will be paid to perform all adhesion tests and epoxy coating patch due to testing. A Type V automatic self-aligning adhesion tester shall be used per ASTM 4541 specifications.

(f) TRACER WIRE TESTING. All new tracer wire installations shall be located using typical low frequency (512Hz) line tracing equipment, witnessed by the Contractor and Engineer, prior to acceptance of ownership. This verification shall be performed upon completion of rough grading and again prior to final acceptance of the project. Continuity testing in lieu of actual line tracing shall not be accepted.

11.3.16 CLEANING SEWERS AND APPURTENANCES

The sewers and all appurtenances shall be thoroughly cleaned at the Contractors expense under the direction and to the satisfaction of the Engineer before final acceptance of the work. In the event the City has to perform any cleaning, the Contractor will be charged $550 per hour for the cost of labor, equipment, and materials.

11.3.17 REPLACING SIDEWALKS, CURB AND GUTTER, BASE COURSE, PAVING, ETC.

Where sidewalks, curb and gutter, culverts, etc., are removed within the limits of the work, the Contractor shall compact the backfill as specified under the applicable Article, and shall then replace sidewalks, curb and gutter, culverts, etc., in accordance with the prevailing City Specifications for the class of work involved. Sidewalk and curb and gutter removals shall be in accordance with *ARTICLE – 4 CONCRETE, Section 4.8.3. and Section 4.8.2.* Where grassed areas are encountered, the Contractor shall replace all sod with sod of similar characteristics to that adjacent.

A Concrete Permit is required for all concrete work within the City of Pueblo. A "no fee" Concrete Permit shall be issued by the City Engineering Division for City funded projects. Any

concrete work placed without benefit of both permit and inspection by Public Works will not be paid for.

11.3.18 GRAVEL SURFACED STREETS OR ALLEYS

When trenches are excavated in streets or alleys which have only a gravel surface, the Contractor shall replace such surfacing on a compacted backfill with gravel conforming to *ARTICLE 6 - AGGREGATE BASE CONSTRUCTION, CLASS 6*, equal in depth to that which originally existed or a minimum thickness of two inches (2"). The surface shall conform to the street or alley grade as set by the Engineer. Where the completed surface settles below the finished grade, additional gravel base course material shall be placed and compacted immediately to restore the roadbed surface to finished grade and to allow drainage.

11.3.19 CONCRETE AND ASPHALT PAVEMENT REMOVAL AND REPLACEMENT

When concrete pavement is removed, the removal shall be to an existing joint or to a sawed joint which is made prior to the removal.

The final edges of the asphalt removed and replaced shall be along a straight line, neatly sawed to a depth which allows the pavement to be removed with no disturbance to the asphalt left in place.

The edges of the pavement (either concrete or asphalt) removal and replacement shall extend one foot (1') beyond the edge of the excavation required for pipe installation. The edges of the pavement shall be clean, straight, and free from jagged intrusions and loose pieces. If the edges of the pavement are not straight, the Contractor shall saw cut back to a point where a straight edge can be maintained or overlay the asphalt patch with a minimum of 3x the nominal aggregate size asphaltic overlay, extending two feet (2') beyond the edges of the asphalt patch. Concrete or asphalt removed from the trench surface shall not be used in the initial backfill, and all pieces exceeding eight inches (8") in any dimension shall be removed from the site.

If the distance from the lip line of the curb & gutter to the trench is less than four feet (4'), all asphalt shall be removed from lip to the trench line.

11.3.20 ASPHALT PAVED STREETS

When trenches for public mains are excavated in streets that have an asphalt surface, the Contractor shall replace such surfacing as follows:

(a) Place controlled low strength materials (CLSM) (flowable fill) having a minimum thickness of two (2) feet below the hot asphalt bituminous pavement.

(b) Place hot bituminous asphalt pavement wearing surface having a minimum compacted thickness equal to the original pavement, or four inches (4"), whichever is greater.

All the foregoing materials and methods of application shall comply with *ARTICLE 6 - AGGREGATE BASE CONSTRUCTION and ARTICLE 8 - PAVEMENT.*

Outside of trench areas, the Contractor shall restore damaged bituminous surfaced streets to the condition which existed prior to construction. The Contractor shall make these repairs at their own expense if the damage is a result of their operations.

11.3.21 CONCRETE PAVED STREETS

When trenches are excavated in streets constructed of concrete, the Contractor shall replace said concrete with an equivalent concrete pavement. Said concrete pavement shall have a

minimum thickness conforming to *ARTICLE 8 - PAVEMENT* and shall be placed on six inches (6") of Class 6 base conforming to *ARTICLE 6 - AGGREGATE BASE CONSTRUCTION.*

Outside of trench areas, the Contractor shall restore damaged concrete surfaced streets to the condition which existed prior to construction. The Contractor shall make these repairs at their own expense if the damage is a result of their operations.

11.3.22 CONCRETE CURB AND GUTTER, SIDEWALK, DRIVEWAY, ALLEY PAN AND DIP REMOVAL

Concrete curb and gutter, sidewalks, driveways, alley pans and dips shall be removed to the limits designated by the Engineer. All joints (except expansion joints) shall be saw cut prior to removal unless otherwise directed by the Engineer. Any concrete broken or disturbed by the Contractor outside of the designated limits shall be replaced at the expense of the Contractor at no cost to the project. Sawing shall be considered incidental and subsidiary to the pipeline excavation. See *ARTICLE 4 – CONCRETE* for additional requirements.

11.3.23 CITY RESERVES RIGHT TO DO REPAVING OR RESURFACING OF STREETS

The City reserves the right to do the repaving or resurfacing of the streets even though the Proposal lists quantities for doing such work. The Engineer may direct the Contractor to omit any portion or all repaving or resurfacing, in which case the Contractor shall not be entitled to any adjustment or allowance in contract prices.

11.3.24 ASPHALT OR CONCRETE UNAVAILABLE OR INCLEMENT WEATHER ON COMPLETION OF BACKFILL

Upon completion of backfill operations, if hot bituminous asphalt or concrete is unavailable or the weather is inclement, a temporary asphalt surface - cold mix or other approved material - having a two inch (2") minimum thickness shall be installed immediately on the surface of the trench, cut, or hole in an asphalt or concrete street, walk, curb and gutter, etc. before the Contractor leaves the excavation site or continues the trench to the next block, intersection, or alley, unless otherwise allowed by the Engineer. Cold mix asphalt and its placement shall be furnished at the Contractor's expense and shall not be a pay item.

As soon as hot bituminous asphalt or concrete becomes available, the temporary asphalt surface shall be removed and replaced with permanent asphalt or concrete in accordance with the prevailing City construction and material specifications for the class of work involved by the Contractor. See *ARTICLE 8 – PAVEMENT* for additional requirements.

11.3.25 GREASE AND SAND INTERCEPTORS

Grease interceptors and sand interceptors shall have a minimum of two (2) compartments and shall be capable of the separation and retention of grease and the storage of settled solids. Interceptor design shall conform with the requirements of the *Plumbing Code per Section 16-8-4 of the Pueblo Municipal Code.* A control manhole over each compartment for monitoring purposes shall be required and installed at the owner/operator's sole expense. Covers shall have a gas tight fit. The interceptor shall be designed, constructed and installed for the calculated loading. Flow control devices shall be required where the water flow through the interceptor may exceed its rated flow. Interceptors shall be installed in a location outside the building which is easily accessed at all times for inspections, cleaning and proper maintenance, including pumping.

Grease interceptors and sand interceptors shall be vented in accordance with the Plumbing Code. The vent shall terminate not less than six (6) inches above the flood-rim level or in accordance with the manufacturers' instructions.

Grease interceptor and sand interceptor capacity calculations shall be performed by the food or engine service facility based on the size and type of operation according to the formula contained in the Plumbing Code. Where sufficient capacity cannot be achieved with a single unit, installation of interceptors in a series is required.

Grease or sand interceptors shall be constructed at the Contractor/Developer's expense and shall not be a pay item.

11.4 METHOD OF MEASUREMENT

Method of measurement for sanitary sewer construction shall be as follows:

(a) Manholes – Each manhole removed and/or constructed of various sizes shall be counted for payment by the contract unit. Each manhole repaired using cementitious material and/or epoxy coating of various sizes shall be measured by the vertical foot from the invert of the manhole to the top rim of the manhole.

(b) Sanitary Sewer Pipe - The length of sanitary sewer pipe of various sizes and types shall be measured in linear feet along the alignment of the centerline of the pipe from the face of the manhole to face of the manhole unless a connection is made to an existing stub.

(c) CLSM (Flowable Fill) – Flowfill (when required) will be measured by the individual weigh tickets for each truckload. Weigh tickets shall be from state certified scales, shall be furnished to the inspector, signed by the driver and include the following information:

Date
Time Dispatched
Quantity in Cubic Yard
Project
Destination
Truck No.
Material Type

(d) Service Lines - The length of service lines of various sizes shall be measured in linear feet along the alignment of the centerline of the pipe for actual pipe installed.

(e) Reconnect Service Lines - Each service line reconnected to the sanitary sewer main shall be counted for payment.

(f) Earthwork, Excavation, Trenching and Backfilling - Unless otherwise specified, these items will not be measured for separate payment but will be considered as incidental to the item to which it applies and shall be included in the unit price for that item, unless rock is encountered as described in section *11.3.8 - TRENCHES IN ROCK.*

(g) Rock Excavation - Rock excavation shall be measured for payment by the cubic yard. In measuring the number of cubic yards of rock excavation, the width of the trench excavated will be multiplied by the average depth from the surface of the rock to a point six (6) inches below the outside bottom of the sewer pipe. This result multiplied by the length of the trenched rock and divided by twenty-seven (27) will give the number of cubic yards allowed for payment.

(h) Trench Stabilization Material - Approved material used to stabilize the subgrade shall be measured for payment by the ton as evidenced by weight tickets for each truckload or fraction thereof.

(i) Imported Backfill Material - Approved backfill material to replace unsatisfactory material shall be measured for payment by the ton as evidenced by weight tickets for each truckload or fraction thereof.

(j) Class "A" Concrete Cradle Bedding - Concrete cradle bedding shall be measured for payment by the linear foot.

(k) Class "B" Pipe Bedding - Pipe bedding will not be measured for separate payment but will be considered as incidental to the sanitary sewer pipe and all costs in connection therewith shall be included in the unit price for the pipe.

(l) Reinforced Concrete Encasement - Reinforced concrete encasement shall be measured for payment by the linear foot.

(m) Gravel Surface Replacement - Aggregate base to replace the gravel lost during excavation on gravel surfaced streets or alleys will be measured by the individual weigh tickets for each truckload from state certified scales. Weigh tickets shall be furnished to the inspector, signed by the driver and include the following information:

Date
Time Dispatched
Gross Weight
Tare Weight
Net Weight
Project
Destination
Truck No.
Material Type
State allowable Gross Vehicle Weight (GVW)

(n) Sidewalk and Driveway Replacement - Sidewalk and driveway replacement shall be measured for payment in square feet of concrete of the specified thickness measured in place, completed and accepted.

(o) Curb and Gutter Replacement - Curb and gutter replacement will be measured for payment in accordance with all applicable items as described in *ARTICLE 4 - CONCRETE, Section 4.8.2 - Method and Payment.*

(p) Curb and Gutter, Sidewalk, Driveway, Alley Pans, Dips, and Concrete and Bituminous Pavement Removal - The removal and disposal of curb and gutter, sidewalk, driveway, alley pans, dips, and concrete and bituminous pavement will not be measured for separate payment but will be considered as incidental to the pipe and structure items and all costs in connection therewith shall be included in the unit price for that item, unless otherwise noted in the bid schedule.

(q) Concrete Pavement Replacement - Concrete pavement replacement shall be measured for payment on the linear foot basis of the specified thickness, completed and accepted, measured in place along the centerline of the sewer main or service lines.

(r) Hot Bituminous Pavement Replacement - Hot bituminous pavement replacement shall be measured for payment on the linear foot basis of the specified thickness, completed and accepted, measured in place along the centerline of the sewer main or service lines.

(s) Concrete Alley Pan, Dip or Double Gutter Replacement - The replacement of concrete

alley pans, dips, and double gutters shall be measured for payment in square feet of concrete of the specified thickness, measured in place, completed and accepted.

11.5 BASIS OF PAYMENT

All costs in connection with the proper, safe and successful completion of the work, including furnishing all materials, equipment, supplies, and appurtenances; equipment and tools; and performing all necessary labor and supervision to fully complete the work in accordance with these specifications and the standard details, shall be included in the unit and lump sum prices bid. All work not specifically set forth as a pay item in the Proposal shall be considered a subsidiary obligation of the Contractor and all costs in connection therewith shall be included in the prices bid. When there is no unit price shown in the proposal, the price will be negotiated.

Basis of payment for sanitary sewer construction shall be as follows:

a. Manholes – Constructed manholes will be paid for at the contract unit price per manhole and this shall include the ring and cover castings and adjustment sections, precast sections, and all items incidental to complete the manhole, in accordance with these specifications and the Standard Details.Manholes repaired using cementitious material and/or epoxy will be paid for at the contract unit price for various sizes which are placed, tested and accepted as measured in the field. Payment will only be made after manhole forms have been submitted and approved.
b. Sanitary Sewer Pipe - Sanitary sewer pipe will be paid for at the contract unit price for the various sizes and types, installed complete in place. Said price shall include all excavation, shoring, bedding, joint materials, plugs, bypass pumping, temporary connections, connection to existing manholes, all other materials, to construct in accordance with these specifications and the *Standard Details and Pavement Impact Fees as outlined in Section 12-6-4.1 of the City Code of Ordinance*. No payment will be made for pipe until backfilling, compaction tests, deflection (go-no-go) test, exfiltration and/or infiltration tests have been accepted by the Engineer.
c. Tracer Wire – Tracer wire will be paid for at the contract unit price for the tracer wire and appurtenances, installed complete in place. Said price shall include all wire, access boxes, grounding, and all other materials, to construct in accordance with these specifications and the Standard Details. No payment will made for tracer wire until the tracer wire has been accepted by Engineer.
d. CLSM (Flowable Fill) - Payment shall be made by the number of cubic yards delivered and placed in accordance with the plans and specifications and accepted by the Engineer. Any material delivered to the site without a weight ticket will not be paid for.
e. Service Lines and Reinstate Service Lines - Service lines and the reconnection of service lines will be paid for at the contract unit price and shall be full compensation for placed and accepted pipe, including all fittings, plugs and markers in accordance with these specifications.
f. Rock Excavation - Rock excavation will be paid for at the contract unit price and shall include the payment for any additional foundation or bedding material required and disposal of the rock removed which will not meet the requirements for backfill.
g. Trench Stabilization Material - Trench stabilization material will be paid for at the contract unit price and shall include all work to furnish the approved material and the disposal of the unsuitable material.
h. Imported Backfill Material - Imported backfill material will be paid for at the contract unit price and shall include all work to furnish the suitable material and disposal of the unsuitable material.

i. Class "A" Cradle Bedding - Payment for Class "A" Cradle Bedding, will be paid for at the contract unit price, complete in place.
j. Reinforced Concrete Encasement- Reinforced concrete encasement will be paid for at the contract unit price, complete in place.
k. Gravel Surface Replacement – Payment shall be made for by the number of tons delivered and placed in accordance with the plans and specifications and accepted by the Engineer. Material delivered in trucks that exceed the rated GVW (Gross Vehicle Weight) will be used but the excess over GVW will not be paid for. Any material delivered to the site without a weight ticket will not be paid for.
l. Sidewalk and Driveway Replacement- Sidewalk and driveway replacement will be paid for at the contract unit price, complete in place.
m. Curb and Gutter Replacement - Curb and gutter replacement will be paid for at the contract unit price, complete in place.
n. Concrete Pavement Replacement - Concrete pavement replacement will be paid for at the contract unit price and shall include furnishing and placing concrete pavement, and base under the new concrete, if required.
o. Hot Bituminous Pavement Replacement - Hot bituminous pavement replacement shall be paid for at the contract unit price, complete in place.
p. Concrete Alley Pan, Dip or Double Gutter Replacement - The replacement of concrete alley pans, dips, and double gutters shall be paid for at the contract unit price, complete in place. Said unit price shall include replacement with the specified thickness of concrete, reinforcing bars and base material, if required.

11.6 PRIVATE SEWERS

11.6.1 DESCRIPTION

Private sanitary sewers are not allowed unless otherwise authorized by the City Engineer, and consistent with the requirements of the Sanitary Sewer Design Criteria and Policies. The information covered by this specification consists of construction standards, inspections, and minimum requirements for “Private Sewers.” The term “Private Sewers” as used in these specifications shall mean a building sewer which receives the discharge from more than one (1) building drain and conveys it to a public sewer and is installed and maintained by an approved designated authority. Private sewers are not part of the public sanitary sewer system.

11.6.2 PLANS AND DATA

Profiles of the ground or a detailed utility plan shall be shown on the plans for the work. The Contractor must satisfy themselves regarding the character of the material to be excavated and the work to be done.

11.6.3 MATERIALS

The requirements for *Section 11.2 – MATERIALS* are applicable to private sewers. It is the intent of this section to include Section 11.2 by reference and all provisions are applicable as though they were listed herein, unless specifically excepted or modified. In addition, cleanout covers (when required) shall withstand H-20 loading in traffic areas.

11.6.4 CONSTRUCTION REQUIREMENTS

Many portions of Section 11.3 are applicable to private sewers; however, there are some exceptions and discrepancies. It is the intent of this section to include Section 11.3 by reference and all provisions are applicable as though they were listed herein, unless specifically

excepted or modified. All references to the negotiation of “extra work” are deleted for private sewers.

Section 11.3.08 – TRENCHES IN ROCK is amended to read as follows:
Whenever rock material is encountered, as defined in *Section 11.3.8*, the Contractor shall immediately notify the Engineer. The Engineer will then direct the Contractor as deemed necessary.

Section 11.3.11(b) – CLASS “B” BEDDING is amended to read as follows:

The sewer pipe shall be set on a minimum of four inches (4”) of Class “B” Bedding material carefully shaped to fit the lower part of the conduit exterior for a width of at least 60% of the pipe breadth and for the entire pipe length. After setting the sewer pipe, Class “B” Bedding shall be added and properly tamped around the lower half of the pipe (haunches) for the full width of the trench, and the bedding shall be consolidated carefully without disturbing the pipe alignment or grade. For eight-inch (8”) diameter and larger pipe, additional Class “B” Bedding material shall be added up to a minimum of twelve inches (12”) above the top of the pipe for the full width of the trench.

Section 11.3.16 – TESTING AND INSPECTION, delete all references to the City televising the sanitary sewer main.

11.6.5 PERMITS AND FEES

Prior to installing any private sewer main, the Contractor shall obtain a permit from the Regional Building Authority. An inspection fee shall be assessed to all private sewers. The fee shall be paid prior to the issuance of the permit and the amount shall be in accordance with the fee schedule established by the Regional Building Authority. If a private sewer is installed without obtaining a permit, the Contractor will be required to pay two (2) times the regular fee schedule and/or will be required to pothole the sewer at various locations as directed by the Engineer. Cut sheets shall be submitted for review and approval to the City of Pueblo – Department of Public Works, two (2) working days prior to the start of construction.

ARTICLE 12

STORM SEWERS

12.1 GENERAL

12.1.1 DESCRIPTION

The work covered by this specification consists of furnishing all labor, equipment, tools, materials necessary to install storm sewer pipe and appurtenances as shown on the plans and as specified herein. The term "Storm Sewer" as used in these specifications also applies to "Culverts" and all provisions apply unless noted otherwise.

12.1.2 PLANS AND DATA

Profiles of the ground or a detailed utility plan shall be shown on the plans for the work. The Contractor must satisfy himself regarding the character of the material to be excavated and the work to be done.

12.1.3 SITE INVESTIGATION

Contractor acknowledges the nature and location of the work, the general and local conditions, particularly those bearing upon transportation, disposal, handling and storage of materials, availability of labor, water, electric power, uncertainties of weather, physical conditions at the site, the character/quality of surface and subsurface materials to be encountered, the character of equipment and facilities needed prior to and during the work, and all other matters which can in any way affect the work or the cost thereof under this contract. Failure by Contractor to acquaint himself with all the available information concerning these conditions will not relieve him from responsibility for estimating properly the difficulty or cost of successfully performing the work.

12.2 MATERIALS

12.2.1 PIPE MATERIALS

Acceptable storm drain construction materials to be used for all public infrastructure include ASTM C76 Class III reinforced concrete pipe (RCP) and High Performance (HP) Storm Polypropylene Pipe manufactured by Advanced Drainage System, Inc. (or approved equal). Approved HP Storm Polypropylene Pipe diameters range in size from 15” to 60”. Other materials may be considered on a case-by-case basis for private development projects that will not be publicly maintained. **Only the type of pipe designated on construction documents will be allowed.**

Acceptable storm drain construction materials to be used for private development projects include ASTM C76 Class III reinforced concrete pipe (RCP), High Density Polyethylene (HDPE) with smooth interior, High Performance (HP) Storm Polypropylene Pipe manufactured by Advanced Drainage System, Inc. (or approved equal), or Polyvinyl Chloride (PVC). **Only the type of pipe designated on construction documents will be allowed.**

For pipes sizes larger than 60 inches in diameter, **only RCP will be allowed.**

When plastic pipe with flared end sections is to be installed, the end section shall be steel or reinforced concrete as approved by the Engineer. Concrete collars will be required to join

reinforced concrete flared end section to the plastic pipe. Plastic flared end sections are not acceptable.

12.2.2 REINFORCED CONCRETE PIPE (RCP)

Concrete pipe shall be made using Type I/II cement or a 7-sack mix design and shall be a minimum of Class III unless shown otherwise on the drawings, and shall conform to the following AASHTO / ASTM designation:

	AASHTO	ASTM
Storm Drain and Sewer Pipe (RCP)	M 170	C76
Precast Manhole Sections	M 199	C 478
Arch Pipe	M 206	C 506
Elliptical Pipe	M 207	C 507
Joints, Using Rubber Gaskets	M 315	C 473
Precast Reinforced Concrete Box Sections	M 259	C 1577 or C 1433
Joints, Using Rubber Gaskets (Box Culverts)		C 1677
Joints, Using Mastic Gaskets		C 1990

Prior to pipe laying operations, the Contractor shall submit a letter from the pipe manufacturer certifying that the minimum areas of steel (RCP) and concrete strengths are in compliance with the applicable AASHTO specification and strength classification. The pipe manufacturer's facility shall be certified annually by the American Concrete Pipe Association. Representatives from the City shall be allowed full access to the facility to observe all phases of the pipe manufacturing process and to review all records pertaining to pipe testing. The City reserves the right to reject pipe based upon visual observations of apparent defects or departures from the tolerance standards.

Joints for storm drains or manholes shall be either bell and spigot or tongue and groove. Jointing material for concrete pipe shall be a preformed, flexible plastic sealing compound which conforms to Federal Specification SS-S-00210 (GSA-FS6) "Sealing Compound Preformed Plastic for Expansion Joints and Pipe Joints". The sealant shall be made of top-grade vulcanized butyl rubber which is compressible and has a tacky surface for adherence to the joint. The material shall be capable of being installed in the temperature range from zero to one-hundred degrees Fahrenheit (0 - 100°F).

12.2.3 HIGH DENSITY POLYETHYLENE PIPE (HDPE)

High density polyethylene pipe shall have a smooth interior wall (Type S) and shall conform to AASHTO M 294. Joints shall be a gasketed bell and spigot fitting. Acceptable products are "N-12 WT IB" as manufactured by Advanced Drainage Systems, Inc. or an approved equal. The joining of pipe shall be in strict conformance with the manufacturer's recommendations or the Contract Documents, whichever is more stringent. Only pipe diameters 15" through 36" will be allowed. Installation of High-Density Polyethylene pipe (HDPE) must meet the following conditions described below:

(a) Where there are discrepancies between HDPE pipe installation specifications and City of Pueblo Standard Specifications, the more stringent specifications will apply.

(b) Where HDPE pipe enters a manhole, flowable fill must be used to ensure proper support beneath the pipe. Flowable fill must be installed to the spring line of the highest HDPE pipe and within the area of manhole excavation.

(c) Upon completion of installation and backfill, the contractor must demonstrate that the pipe has not deflected more than 5% of the pipe diameter, including manufacturing tolerances.

(d) HDPE pipe may not be used in Public Right-of-Way or adjacent to a street that has classification as a Collector or higher designation.

(e) The maximum allowable height of backfill as measured from the top of pipe to finished grade shall be limited to ten feet (10').

12.2.4 HIGH PERFORMANCE POLYPROPYLENE PIPE (HPPP)

Only pipe diameters 15" through 60" pipe will be allowed. High Performance Polypropylene Pipe supplied shall be smooth interior with annular exterior corrugation meeting the requirements of ASTM F2881 for respective diameters.

Pipe shall be joined using bell & spigot joints, meeting the requirements of ASTM F2881. The join shall be watertight according to the requirements of ASTM 3212. Gaskets shall meet the requirements of ASTM F477.

Fittings shall conform to ASTM F2881. Bell and spigot connections shall utilize a welded or integral bell and valley or inline gaskets meeting the watertight joint performance requirements of ASTM 3212. Gaskets shall meet the requirements of ASTM F477.

All High Performance Polypropylene Pipe storm sewer shall be installed in accordance with ASTM D2321. Please refer to the HPPP Storm Trench Installation Detail for all other installation requirements.

12.2.5 BEDDING FOR PIPE

(a) CLASS "B" BEDDING – Suitable material for RCP shall be Class "B" bedding a well-graded crushed stone. When tested by means of laboratory sieves it shall conform to the following requirements: (AASHTO M43, NO. 67 gradation)

SIEVE SIZE	PERCENT PASSING
1 in.	100
¾ in.	90
3/8 in.	20 – 55
No. 4	0 – 10
No. 8	0 – 5

When crushed gravel or stone is used, at least 50 percent, by weight, of the particles retained on the No. 4 sieve and above shall have at least two (2) fractured faces.

(b) CLASS I OR II BEDDING – Suitable material for HDPE and HPPP shall be Class I or II. The contractor shall provide documentation for material specification to engineer. Fill shall be placed in six (6)-inch lifts with a minimum compaction of 95% per the city standards for both cohesive and cohesion less soils. Unless otherwise noted by the engineer, minimum bedding thickness shall be 6" for all pipe sizes. The

middle 1/3 beneath the pipe invert shall be loosely placed. See ADS's "109 Classes of Embedment and Backfill Materials Detail" for bedding specifications.

12.2.6 TRENCH STABILIZATION MATERIAL

Backfill for unstable subgrade conditions shall be select material as approved by the Engineer. Contractor shall submit a sample and sieve analysis for City Engineer's review and approval prior to delivery of the materials to the site.

12.2.7 CONCRETE MANHOLES

Unless otherwise specified on the plans, or approved by the City Engineer, manholes shall be constructed of precast concrete barrels and cones with cast-in-place concrete bases. Bases may be precast if placed on six inches (6") of compacted gravel bedding extending a minimum of twelve inches (12") around the base or the width of the excavation-whichever is greater. In the event severe groundwater conditions are encountered, the thickness of the gravel bedding below the manhole base shall be increased to twelve inches (12"). Alternate construction methods may be required as approved by the Engineer on a case-by-case basis. The concrete channel and bench within precast bases shall be poured on site after the storm sewer pipe is set to grade. Where possible, manhole channel shall be storm sewer pipe with the upper portion removed. Precast concrete barrels and cones shall conform to ASTM C478 Standard Specifications except that the wall thickness may be either wall A or wall B as described in ASTM C76

Standard Specifications. Provide eccentric cones for all manholes greater than six feet (6') deep, and flat lids for manholes six feet (6') deep or less as shown on the drawings. Manholes shall conform to the Standard Details shown on the plans. Concrete used in the construction of all storm sewer structures shall conform to those portions of ARTICLE 4 – CONCRETE and ARTICLE 5 – STRUCTURAL CONCRETE, which are applicable.

All joints in the manhole barrel, cone, grade adjustment rings, and flat top sections shall be sealed with a preformed flexible plastic sealing compound conforming to Federal Specification SS-S-00210 (GSA-FS6). All joint surfaces shall be cleaned prior to applying the sealant. The outside of the manhole joints shall be wrapped with a butyl adhesive tape sealant that conforms to Federal Specification SS-S-00210 (GSA-FS6). The eccentric cone section shall be situated so that the slope of the cone section is pointing toward the downstream direction.

All pipe penetrations shall be an approved flexible connection, mechanical seal, water stop, or non-shrink grout to reduce infiltration and exfiltration. When grouting is necessary at a water stop connection, non-shrink grout shall be used.

Manholes are required whenever there is a change in size, direction, elevation, grade, or where there is a junction of two or more drains. A manhole may be required at the beginning and the end of the curved section of storm drain. The maximum spacing between manholes is 500 feet for pipes with a vertical dimension of 42 inches and larger, and 400 feet for pipes with a diameter of less than 42 inches. The required manhole size shall be in accordance with values shown below:

Storm Drain Diameter (inches)	Manhole Diameter (feet)
15 to 18	4
>18 to <42	5
42 to 54	6
Larger than 54	Appropriate manhole size from CDOT Standard Plan No. M-604-20

Larger manhole diameters or a junction structure may be required when large diameter pipe alignments are not straight through manholes or when more than one storm drain line goes through the manhole. A special structure is required for 42-inch or larger pipe when the angle of deflection is more than 45 degrees.

12.2.8 INLETS

Inlets (Catch Basins) shall be constructed of cast-in-place concrete in accordance with the standard detail of the type and size shown on the drawings. Precast concrete inlets may be used when approved by the Engineer with the added requirements shown on the "Pre-Cast Inlet Detail". Shop drawings for all precast inlets must be submitted to the Engineer for approval prior to installation. If differing site conditions require modifications to the precast inlet, the cost to modify or replace the inlet will be borne solely by the contractor. Inlets fabricated prior to the completion of the inlet piping will be at the contractor's risk.

The standard inlets permitted for use in the city are provided in the below:

Standard Inlet Types in City of Pueblo	
Inlet Type	**Use Permitted**
CDOT Type R Curb Opening	All street types
Slotted Inlet Parallel to Flow	Streets or open areas
CDOT Type D	Streets or open areas
CDOT Type C Grate	All streets with a roadside or median ditch
CDOT/Denver 13 Valley Grate	Alleys or drives with a valley gutter (private areas only)
Denver No. 16 Combination	All street types

The City may consider other inlet types for retrofit projects if the applicant demonstrates that the City's standard inlet types are unsuitable. The use of inlet types that are not listed in the Table above will require a variance.

Further guidance and requirements are provided in the *City of Pueblo Drainage Criteria Manual, April 2023.*

12.2.9 MANHOLE RING AND COVER ADJUSTMENT

(a) CONCRETE GRADE RINGS. Reinforced concrete grade rings may be used in the adjustment of manhole rings. Grade rings shall have a minimum thickness of two inches (2") and maximum thickness of six inches (6"). Total adjustment height shall not exceed the tolerances as shown on the Standard Details.

(b) HIGH DENSITY POLYETHYLENE (HDPE) GRADE RINGS. High Density Polyethylene grade rings may be used in the adjustment of manhole rings. Grade rings shall be rated for HS-20 loading. Total adjustment height shall not exceed the tolerances as shown on the Standard Details.

12.2.10 CASTINGS AND MANHOLE RING & COVERS

Iron castings shall conform to the requirements of AASHTO M306. Gray iron used in the casting shall conform to AASHTO M105, Class 35B, unless otherwise specified.

Castings shall be boldly filleted at angles and the risers shall be sharp and perfect. Castings shall be true to pattern in form and dimensions, free from pouring faults, sponginess, cracks, blow holes or other defects in positions affecting their strength for services intended. The ring and covers for manholes and all storm sewer appurtenances shall be straight and shall fit properly together so that traffic will not cause them to rattle. Rough spots, which prevent a suitable fitting, shall be removed by grinding. Manhole castings shall be Neenah R-1706, Deeter 1258, East Jordan Ironworks 2430 or approved equal. The informational logo “No Dumping / Drains to River” shall be cast on the covers. Other castings shall be as shown on the Standard Details. See City Standard Details for additional information.

12.2.11 RIPRAP

Riprap shall consist of hard, dense, sound, rough fractured stone as nearly cubical as practicable. Thin slab type stones and flaking rock shall not be used. The stone shall have a specific gravity of at least 2.5. Concrete rubble is not acceptable for use as rip rap unless approved by the Engineer.

Stones shall be well graded in order that the voids can be filled. At least fifty percent (50%) of the mass shall be stones equal to or larger than the stone size called for on the plans. Stone size shall not be larger than the thickness of the riprap layer.

Riprap shall be placed to conform to the plan details. The larger size stones composing the riprap material shall be placed first and roughly arranged in close contact. The spaces between the larger stones shall then be filled with smaller stone of suitable size, so placed as to leave the surface evenly stepped, conforming to the contour required. The material may be machine placed with sufficient hand work to accomplish requirements of this specification.

Excavation for riprap shall be made to a neat line. Allowance will not be made for work outside of the neat line.

All riprap shall require filter fabric as specified in section 12.2.12 FILTER FABRIC.

12.2.12 FILTER MATERIAL

Class A filter material shall consist of free draining sand, gravel, or crushed stone. The material shall be uniformly graded from coarse to fine and shall meet the following gradation requirements:

SIEVE SIZE	PERCENT PASSING
3”	100
¾”	20-90
No. 4	0-20
No. 200	0-3

12.2.13 FILTER FABRIC

Filter fabric shall be a nonwoven polypropylene material conforming to the minimum performance specifications outlined below and designed for use under riprap. Acceptable products are Supac 4NP manufactured by Phillips 66, 0401T manufactured by Advanced Drainage Systems, Inc., or an approved equal.

Min. Thickness (mils) ASTM D1777	40
Min. Grab Strength (md/cd, %) ASTM D4632	50
Min. Grab Elongation (md/cd, %) ASTM D4632	50
Min. Burst Strength (psi) ASTM D3786	155
Min. Puncture Strength (lbf) ASTM D4833	55
Min. Permeability (cm/sec) ASTM D4491	0.2
Max. A.O.S. (Std. Sieve) ASTM D4751	35

12.2.14 TRACER WIRE

Refer to Standard Detail Drawings SD31 thru SD36.

12.3 CONSTRUCTION REQUIREMENTS

12.3.1 WATER LINE AND SANITARY SEWER CROSSINGS

Where storm sewer mains cross water mains, sanitary sewers or other non-potable lines, the storm sewer pipe shall be a minimum of eighteen inches (18") clear distance vertically below the water main or sanitary sewer. If this clear distance is not feasible, the crossing utility section must be designed and constructed so as to protect the water main or sanitary sewer. Minimum protection shall consist of the installation of an impervious and structural sewer. For example:

(a) REINFORCED CONCRETE ENCASEMENT. The sanitary sewer pipe shall be reinforced with a reinforced concrete encasement. The encasement shall be at least six inches (6") thick and extend a distance of ten feet (10’) either side of the water main or storm sewer. See Section 11.3.11 - PIPE BEDDING LIMITS, REINFORCED CONCRETE ENCASEMENT.

(b) JOINT CENTERING. The sewer shall be constructed such that one length of pipe, at least eighteen feet (18') long, shall be centered over the water main or storm sewer. Joints between the sewer pipe and special length pipe (18' section of pipe) shall be encased in a concrete collar at least six inches (6”) thick and extending at least six inches (6”) either side of the joint.

In all cases, proper soil compaction, suitable backfill or other structural protection shall be provided to preclude settling and/or failure of either pipe.

12.3.2 RAILROAD AND HIGHWAY CROSSINGS

At all railroad and highway crossings extreme care shall be exercised to safeguard life and property. All storm sewer work under and adjacent to railroads and highways shall be accomplished to the satisfaction of a representative of the railroad company and/or Colorado Department of Transportation (CDOT) and the Engineer. The Contractor shall obtain at his own expense all permits, bonds, and insurances necessary for the execution of his work, and/or required by the appropriate railroad or CDOT. Contractor shall submit a plan for approval for crossing railroads or highways unless otherwise shown on drawings.

12.3.3 EXCAVATION - GENERAL

All excavation for storm sewer and/or manhole construction will be considered as unclassified excavation. Excavation shall conform to ARTICLE 7 – EARTHWORK, Section 7.3.2 General Excavation.

12.3.4 TRENCH EXCAVATION - WIDTH AND DEPTH

The width of the trench shall provide adequate space for workers to place, join the pipe, and bed the pipe properly.

The minimum width of the trench from a plane six inches (6") below the pipe to a plane twelve inches (12") above the pipe shall be a minimum of nine inches (9") clear on each side from the undisturbed edge of the trench wall to the outside diameter of the pipe. This minimum trench width shall also be used for measurement of trenches in rock.

In order to protect the pipe from external loads in excess of those used in the design of the pipe, it is necessary to limit the width of the lower portion of the trench below an elevation 12 inches above the top of the installed pipe to 6” below the invert of the pipe. The trench from a plane six inches (6") below the pipe to a plane twelve inches (12") above the pipe shall be excavated so the trench walls are as close to vertical as possible. The maximum trench width within this zone will not be limited but shall be kept as narrow as possible.

When using a movable trench support, care shall be exercised not to disturb the pipe location, jointing and bedding material. Any voids left in the bedding material by support removal shall be carefully filled with additional bedding material and properly tamped. The width and slope of the trench from a plane twelve inches (12") above the pipe to the top of the ground shall be determined by the Contractor. Considering factors shall include, but not be limited to; all safety requirements; type of material being excavated; equipment used; widths of dedicated right-of-ways; and adjacent structures, property, and utilities.

The trench bottom shall be constructed to provide a firm, stable and uniform support for the full length of the pipe. Except in ledge rock, water bearing earth, or where a special pipe bedding is called for in the contract documents, the rough excavation of trenches shall extend no less than six inches (6") below the bottom of the pipe.

Correction of a trench grade that is too low shall be done by compacting select material of the types designated by the Engineer, over the entire width of the trench to 95% of AASHTO T99. Such work required due to over excavation will not be included for payment.

Trench excavation shall meet the requirements of ARTICLE 7 – EARTHWORK, SECTION 7.3.2(5) TRENCH EXCAVATION.

12.3.5 HANDLING EXCAVATED MATERIAL

The material excavated from trenches that is suitable for backfill shall be kept so as not to significantly alter drainage flow patterns, endanger the work and to be of as little inconvenience as possible to the traveling public and the occupants of the abutting properties. Free access must be maintained at all times to driveways, fire hydrants, water valves, gas valves, existing manholes, etc., in the vicinity of the work.

Where lines are located in alleys or in any other case where the Contractor proposes to deposit material on private property, written permission shall be obtained from the owner of the property prior to placing any material on the property. The Contractor shall be held responsible for any damage to private property.

Materials encountered during clearing of the right-of-way and excavation of the trench such as rubbish, organic material, abandoned foundations and any other material which are not satisfactory for use as backfill in the opinion of the Engineer, shall be removed from the site and disposed of by the Contractor at his own expense.

12.3.6 UNSTABLE SUBGRADE

Where unstable subgrade conditions are encountered, as determined by the Engineer, the Contractor may be required to excavate below subgrade elevation and backfill the unstable area with material as per Section 12.2.6 - TRENCH STABILIZATION MATERIAL. The material approved by the Engineer shall be used to an elevation six inches (6") below the bottom of the pipe. The extra depth of excavation and backfill shall be as ordered by the Engineer, and only when ordered by the Engineer.

If the unstable condition is a result of the Contractor not properly protecting his work from surface water infiltration, or from sewer or water lines damaged or broken by the Contractor, the cost shall be borne by the Contractor. If the unstable soil condition is the result of ground water infiltration and other causes beyond the control of the Contractor, the extra foundation material ordered by the Engineer will be paid for.

Unstable subgrade shall meet the requirements of ARTICLE 7 – EARTHWORK, SECTION 7.3.2(5)(c) REMOVAL OF UNSTABLE MATERIAL.

12.3.7 TRENCHES IN ROCK

Rock will be defined as any naturally occurring or manmade material in such a form that it cannot be readily removed using the equivalent of a 165hp/40,000lb operating weight track-type tractor (bulldozer) with a ripper or a 188hp/63,000lb operating weight hydraulic excavator (crawler mounted backhoe) with “rock teeth” without a significant loss of production. It also includes boulders exceeding one-half (½) cubic yard in volume.

Whenever rock material is encountered in an excavation, the Contractor shall immediately notify the Engineer for field verification. The Engineer shall measure and document the limits of the rock prior to excavation. Any rock removed prior to notification will not be considered for payment. After rock has been measured, trenching shall continue by such means as may be necessary, to a depth of six inches (6") below the outside bottom of the pipe, and to a width in conformance to Section 12.3.4 - TRENCH EXCAVATION - WIDTH & DEPTH.

Blasting for rock excavation will only be allowed with the written permission from the Engineer and Fire Chief. The Contractor shall exercise the utmost care to protect the public from harm and to avoid property damage. Blasting shall be done by a State licensed blaster. The Contractor shall comply with all laws, ordinances, insurance, bonding, and applicable safety code requirements and regulations and shall be responsible for all damage caused by the blasting operations. Signals warning persons of danger shall be given before any blast.

Blasting shall be controlled as not to make any excavation unduly large or irregular. Excessive blasting or overshooting shall not be permitted. The Engineer shall have authority to order any method of blasting discontinued which leads to overshooting or is dangerous to the public or destructive to property or to natural features. Approved blasting blankets shall be used for all blasting.

12.3.8 QUICKSAND AND GROUNDWATER INFILTRATION

Should running sand, quicksand or groundwater be encountered, the work shall be pushed with utmost vigor. Groundwater encountered in trench or manhole excavations shall be drained to sumps, through sub-drains, or by other methods to keep the water level below the bottom of the bell of the pipe while joints are being made. Dispose of the water in a manner to prevent damage to adjacent property. Drainage of groundwater through any sanitary sewer pipeline is prohibited. Drainage of ground water during construction through any storm sewer pipeline will be allowed. All dewatering and trench stabilization methods and type of equipment used shall be approved by the Engineer and in compliance with the City’s MS4 permit.

If dewatering and trench stabilization is required as a result of the Contractor not properly protecting his work from surface water infiltration, or from sewer or water lines damaged or broken by the Contractor, the cost shall be borne by the Contractor. In the event such work is required through no fault of the Contractor, it shall be considered extra work and a price shall be negotiated.

12.3.9 EXCAVATION FOR STRUCTURES

Excavation for manholes, inlets, vaults, and miscellaneous structures shall consist of the removal of all material necessary for construction of the work in conformity with the plans and these specifications.

If rock is encountered, the excavation shall be done in such a manner as to allow the rock to be exposed and prepared for receiving the concrete. All loose and disintegrated rock or thin strata shall be stripped to a clean bed acceptable to the Engineer and in conformance to all applicable items as described in Section 12.3.7 - TRENCHES IN ROCK.

Whenever the footing is to rest on any excavated surface other than rock, special care shall be

taken not to disturb the bottom of the excavation (subgrade), and the final finishing of the surface shall not be done until just before the footing is to be placed. Correction of any over excavated areas shall be at the Contractor's sole expense.

Whenever the subgrade soil is not sufficiently firm, the Contractor is to furnish and compact, according to the direction of the Engineer, select material, as may be required and in conformance to all applicable items as described in Section 12.3.6 - UNSTABLE SUBGRADE.

After each excavation is completed, the Contractor shall notify the Engineer, who shall make an inspection of the depth of the excavation and character of the foundation material. No concrete shall be placed until after the Engineer has approved the depth of the excavation and character of the foundation material.

An Excavation Permit is required for any underground work within the City of Pueblo. The “no-fee” permit shall be obtained from the City Streets Division at 211 E. “D” Street. Any work placed without benefit of this permit will not be paid for.

12.3.10 PIPE BEDDING LIMITS

Unless stated otherwise on the plans or details or ordered by the Engineer, RCP pipe shall be bedded in accordance with Class "B" bedding as described below and HPPP & HDPE pipe shall be bedded in accordance with Class “I” or “II” bedding as described below. All classes of bedding shall be properly tamped around the lower half of the pipe (haunches) and horizontally away from the pipe in both directions to the undisturbed trench walls.

(a) CLASS “B” CRADLE BEDDING. The sewer pipe shall be set on a minimum of six inches (6") of Class "B" bedding material carefully shaped to fit the lower part of the conduit exterior for a width of at least 60% of the pipe breadth and for the entire pipe length. After setting the sewer pipe, Class "B" bedding shall be added and properly tamped around the lower half of the pipe (haunches) for the full width of the trench, and the bedding shall be consolidated carefully without disturbing the pipe alignment or grade. Additional Class "B" bedding material shall be added up to the spring line of the pipe.

(b) CLASS I or II BEDDING. The storm sewer pipe shall be set on a minimum of six inches (6") of Class "I" or “II” bedding material carefully shaped to fit the lower part of the conduit exterior for a width of at least 60% of the pipe breadth and for the entire pipe length. After setting the storm sewer pipe, Class "I" or “II” bedding shall be added and properly tamped around the lower half of the pipe (haunches) for the full width of the trench, and the bedding shall be consolidated carefully without disturbing the pipe alignment or grade. Additional Class "I" or “II” bedding material shall be added up to a minimum of twelve inches (12") above the top of the pipe for the full width of the trench.

12.3.11 PIPE LAYING

Before any pipe laying shall occur cutsheets shall be submitted to the Stormwater Utility Division for approval. No pipe laying shall occur prior to cutsheet approval. Cutsheets shall match the approved subdivision construction drawings on file with the City. See below for further cutsheet requirements:

a) 25 ft stake intervals

b) Stationing matching approved plans
c) Field Stationing
d) Grade
e) Cut/Fill
f) Slope
g) Description of pipe section

Pipe shall be protected during handling against impact shocks and free fall. Proper methods shall be used for handling and placing pipe to avoid spalling or breaking and to avoid unnecessary disturbance of the bedding surface in the trench bottom. Pipe shall be kept clean at all times and no pipe shall be used in the work which does not conform to these specifications. Pipes shall be laid to a true line and at uniform rates of grade between manholes and/or inlets as shown on the plans. The laying of the pipe in prepared trenches shall commence at the lowest point with the spigot ends pointing in the direction of flow. No pipe shall be laid in water or when trench conditions are unsuitable for such work.

The Contractor shall take every precaution necessary to prevent dirt, debris or surface water from entering the existing lines or new construction.

The Contractor shall submit a plan for handling existing storm sewer flows while rehabilitating the pipe at the pre-construction meeting for approval by the City. The bypass plan must be designed in accordance with the approved traffic control plans and identify the location of any pumping equipment, temporary discharge piping, pumping and discharge manholes, redundant pumps and piping, the location of nearby waterways or drainages, and the method for diverting runoff around the site. The Contractor shall be responsible to obtain all existing flow measurements in the storm sewer to determine a bypass plan. Precautions must be taken to ensure that storm sewer flow control operations do not cause damage to property being served by the storm sewers involved. Bypass pumping will not be allowed during nonworking hours unless authorized by the Engineer. When 24-hour pumping operations have been approved by the Engineer in residential areas, attenuated pumps will be required to minimize noise disturbance. The Contractor shall provide 100% redundancy on any 24-hour pumping operation, near any waterways or any site deemed necessary by the Engineer. Bypass piping shall be placed in trenches and covered with temporary pavement or metal traffic covers when traffic conditions dictate the need for protection of the piping unless otherwise directed by the Engineer. The Engineer may specify additional design requirements based on specific site conditions.

Each bypass pumping system shall be hydrostatically tested using potable water prior to use. Unless otherwise indicated, water for testing bypass pipelines shall be furnished by the Contractor. The bypass pumping system may require air release valves to release air that may become trapped in the bypass system piping. The bypass pumping system shall be filled at a rate which will not cause any surges or exceed the rate at which air can be released through the air valves. The differential pressure across the orifices in the air release valves shall not be allowed to exceed 5 psi at any time during filling. Once the system has been successfully filled and all air purged, the piping system exclusive of the pump(s) shall be pressurized to 150% of the calculated working pressure, or 40 psi, whichever is greater, measured at the lowest point along the alignment, and hydrostatically tested for a minimum of 30 minutes. During the test, the entire system shall be visually inspected for leaks and monitored for pressure drop. Any leaks encountered shall be repaired at the Contractors cost, and the hydrostatic pressure test restarted until the system successfully passes the test. Potable water used during the test shall be discharged to the stormwater system at a controlled rate to prevent surcharging of the

stormwater system.

If the City must provide personnel and equipment to minimize damages, in the event of any failure of the Contractor's storm sewer flow control operations, the Contractor shall be liable for all costs incurred by the City. The Contractor will be charged $550 per hour that the City of Pueblo crews are onsite, which will be deducted from the amount of the Contractor's final payment.

a) ALIGNMENT. All pipe shall be laid to the lines and grades given by the Engineer with joints close and even, butting all around. They shall be carefully centered and shall not deviate more than one inch (1") from line so that when laid will form a storm sewer with a uniform invert and a straight alignment unless a specified curve alignment is shown on the plans.

   The grade of the pipe shall be obtained by the use of batter boards and a "top line," batter boards with a double string line having a minimum of four feet (4') separation, a laser beam, or by the use of surveying instruments approved by the Engineer. The grade shall not be obtained by placing a carpenter's level on individual pipes.

   If batter boards are used, the Contractor shall at all times where pipe laying is in progress, maintain batter boards for a distance covering at least three grade stakes. The elevation of the batter boards shall be determined from the depth of cut as given by the Engineer, and the Contractor shall keep on each crew a person whose duty it shall be to see that the batter boards are in proper place at all times. It is not intended that these requirements shall make it necessary for the Contractor to keep a person especially for this purpose, but to provide that a competent person shall be with each crew at all times whose duty it shall be to attend to the placing of the batter boards and the giving of grades to the pipe layer.

   If a method other than batter boards is used, the instrument used shall be operated continuously under the supervision of a qualified foreman or superintendent. The pipe grade shall be checked by an alternate method at fifty-foot (50') intervals and upon request of the Engineer.

b) VERTICAL TOLERANCE.

   In no case shall a section of pipe be accepted if it does not possess a positive grade (i.e., no flat or adverse sections). Any pipe not within 0.50% of the existing or designed slope shall be re-laid.

c) JOINTING PIPE. All pipe joints shall be made in the manner and under the conditions described under the various types of joints for the work. Preparatory to making pipe joints, all surfaces of the portion of the pipe to be jointed shall be cleaned. All pipe joints shall be watertight when completed.

   (1) HPPP & HPDE JOINTS – Pipe shall be joined using a bell & spigot joint meeting the requirements of ASTM F2881. The joint shall be watertight according to the requirements of ASTM D3212. Gaskets shall meet the requirements of ASTM F477

      (i) Mechanical methods shall be employed, if necessary, to pull or push the pipe together with sufficient force to compress the gasket sufficiently to make a watertight joint.

   (2) REINFORCED CONCRETE PIPE (RCP) JOINTS – Pipe joints shall conform with ASTM C990-09.

(3) OTHER TYPE JOINTS - If any other type of joint is proposed to be used, it shall conform to the requirements of these specifications that apply, and the Contractor shall obtain written approval of the Engineer for its use. Connections to unlike materials must also be pre-approved, in writing, and may require Class “A” bedding (concrete cradle) at the connection joint. When joining pipe sections via a coupler, a Fernco Strong Back RC Series Repair Coupling or an approved equal shielded coupler shall be used to connect the existing to the new sewer pipe.

d) TRACER WIRE – Refer to Standard Detail Drawings SD 32 – SD 39.

12.3.12 BACKFILLING

The line, grade, joints and bedding of the storm sewer shall be inspected and approved by the Engineer before backfilling operations commence.

After the initial backfill (bedding) has been carefully placed in the pipe zone to at least one foot (1') above the top of the pipe, the remainder of the trench shall be backfilled and compacted. Depositing of the backfill material shall be done so that impact of falling material will not damage the pipe or structures.

Permission to use specific compaction equipment shall not be construed as guaranteeing or implying that the use of such equipment will not result in damage to adjacent ground, existing improvements, or improvements installed under the contract. The Contractor shall make their own determination in this regard.

The Contractor shall employ whatever equipment and methods that are necessary to obtain the moisture and required density. All soils within the compaction limits shall be compacted to ninety-five percent (95%) of the maximum dry density as defined by AASHTO T99 (Standard Proctor). Moisture content for all compacted soils shall be within plus or minus 2% of optimum unless field observation verifies that the soils are unstable at lesser moisture contents. In those cases, the Engineer shall establish a minimum moisture content.

On all storm sewer installations, compaction tests shall be made by an approved independent testing laboratory and shall identify the location and depth of the test, the date of the test, the maximum Standard Proctor density and optimum moisture content of the soil and give the percent of compaction and moisture content of the backfill material at the test location. Compaction tests shall be made at a depth of three feet (3') above the top of the pipe and at two-foot (2') intervals in depth, up to and including the surface. Testing shall be done at a minimum of one location for every 250 feet of main line trench or fraction thereof and at every manhole or similar structure. An additional compaction test is required for each inlet pipe run and may be taken along the pipe or at the inlet at the discretion of the Engineer.

All test locations shall be randomly spaced as directed by the Engineer. These tests shall be made at the expense of the Contractor and are intended to give the Contractor and City an indication of the effectiveness of the compaction procedure and shall not relieve the Contractor of any provisions of this specification. **All Compaction tests shall be submitted and accepted by the City prior to construction of any surface improvements.**

If any compaction test should fail to meet the requirements of this section, at least two (2) additional locations shall be tested along the trench, at locations designated by the Engineer, to

determine the extent of the non-compliance. After the extent of non-compliance has been determined, that section of trench shall be re-compacted and retested at a minimum of two (2) locations as directed by the Engineer. If the failure occurs at a lateral, another lateral shall be tested in addition to the extent of non-compliance testing requirements.

In the event of settlement or subsidence of a particular excavation or any part thereof, the Contractor shall be responsible for all repaving, overlay and repair costs occasioned thereby for a period of two (2) years after the project/subdivision acceptance date.

If requested by the Contractor/Developer, and written permission is granted by the City Engineer, backfill for utility trenches may be consolidated using water induced settlement techniques (jetting/puddling). This method of trench backfill consolidation shall only be allowed in those special locations where a failure history exists for trenches using conventional engineered controlled fill. As a condition of permission to use jetting/puddling, the Contractor/Developer must agree in writing to provide a full and complete three (3) year warranty from the final acceptance date, that shall include repair of any surface amenities to the complete satisfaction of the City which may include a full width asphaltic overlay if warranted.

Where backfill for utility trenches within the roadway section are consolidated using jetting/puddling, the moisture and density requirements within the trench compaction limits stated above shall not apply; however, the compaction limits for the finished roadway subgrade as outlined under ARTICLE 7 - EARTHWORK shall apply.

12.3.13 MANHOLE CONSTRUCTION AND ADJUSTMENT

All provisions of Section 11.3.13 are applicable except that drop manholes are not required unless specified on the drawings.

Manhole bases and barrels shall be constructed of the material as specified in Section 12.2 - MATERIALS, unless otherwise specified on the plans or by the Engineer. Contractor shall wait a minimum of twenty-four (24) hours before setting manhole barrel sections, on cast-in-place bases. No backfilling shall commence around manhole bases until the concrete has either attained a compressive strength of 2,000 pounds per square inch, or seven (7) days have elapsed.

The flow channel shall be made to conform in slope and shape to that of the storm sewer pipe and wherever possible, the lower one-half of the storm sewer pipe shall be used for the invert of the open flow channel. At intersections with other lines, channels shall be formed with a sweeping curve to minimize turbulence.

Unless otherwise specified on the plans or specifications, all manhole channels shall be constructed with a minimum elevation drop as shown:

HORIZONTAL DEFLECTION ANGLE OF SEWER PIPE AT MANHOLE	MINIMUM DROP
0°	0.10'
Between 0° & 45°	0.20'
45° to 90°	0.30'

Changes in direction at intersections of sewers shall not be greater than 90 degrees.

Connection to an existing manhole shall be made so the inlet flowline is above the existing concrete manhole base. When connection to an existing manhole is allowed, the contractor shall cut into the existing manhole to install the new sewer pipe and provide a water stop and non-shrink grout for a watertight connection. A concrete channel shall be formed within the existing manhole to provide a smooth discharge from the new pipe to the existing channel.

For vertical drops greater than 8 feet, special designs are required that address potential cavitation and energy dissipation. These situations will require special review. See Design and Construction of Urban Stormwater Management Systems (WEF and ASCE 1992) for guidelines for drop shaft structures.

All manhole ring and covers in streets to be paved shall initially be constructed to a height to top of subgrade or twelve inches (12") below the proposed finished pavement grade, whichever is less. When adjusted to a finished pavement grade, the manhole ring and cover shall be so constructed that the top of the manhole ring and cover will be flush (± 1/4") with the replacement pavement or the grade established by the Engineer, and shall have at least one (1) four inch (4") thick precast concrete or high density polyethylene adjustment rings Adjustment rings shall not exceed twelve inches (12") in height. High density polyethylene adjustment rings must be pre-approved by the Engineer before use and be rated for HS-20 loading.

Contractor shall salvage rings and covers removed from existing manholes. Rings and covers shall become the property of the City.

12.3.14 TESTING AND INSPECTION

Replace section 11.3.15 - TESTING AND INSPECTION with the following:

Prior to acceptance or payment, the Contractor must provide compaction test results to the City for the backfill compaction tests required in Section 12.3.12 - BACKFILLING.

All storm sewers will be inspected by closed-circuit television, by the City, after other utility installations and acceptance of all testing, but prior to construction of surface improvements over the new storm sewer unless otherwise authorized by the City. The Contractor shall thoroughly clean all storm sewers prior to televising by the City. The City requires five (5) working days advance notice for scheduling the televising and will be allowed five (5) working days to complete the television inspection.

At the City’s request, deflection testing by use of a mandrel shall be completed for HPPP and HDPE storm sewer pipe by the contractor or independent agency and paid for by the contractor or owner/developer. Deflection testing shall be done prior to paving and not less than thirty days after installation. The maximum allowable deflection shall not exceed five percent (5%) during the testing. Pipes larger than 36” in diameter may be entered and deflection levels measured directly. Pipe shall be removed, replaced, and retested if maximum deflection exceeds five percent of the pipe’s internal diameter.

Pipe shall be inspected by closed-circuit television by the City of Pueblo prior to the end of the two-year warranty period. Any pipe showing damage that could impact the functionality of the pipe e.g., joint disconnection, pipe cracking, gouges, warping, ponding shall be replaced by the Contractor, at their expense. A deflection test may also be performed in which case if excess of

five percent deflection is found the pipe shall be removed and replaced by the Contractor, at their expense.

Acceptance of the pipe will be granted by the Engineer only after all defects such as poor alignment, mislaid pipe, and broken or damaged pipe have been remedied, and the prescribed testing has been satisfactorily completed. Acceptance of the pipe does not relieve the Contractor of the responsibilities imposed by all other sections of these specifications.

12.3.15 CLEANING SEWERS AND APPURTENANCES

The storm sewers and all appurtenances shall be thoroughly cleaned at the Contractors expense under the direction and to the satisfaction of the Engineer before final acceptance of the work. In the event the City has to perform any cleaning, the Contractor will be charged $550 per hour for the cost of labor, equipment, and materials.

12.3.16 REPLACING SIDEWALKS, CURB AND GUTTER, BASE COURSE, PAVING, ETC.

Where sidewalks, curb and gutter, culverts, etc., are removed within the limits of the work, the Contractor shall compact the backfill as specified under the applicable Article, and shall then replace sidewalks, curb and gutter, culverts, etc., in accordance with prevailing City Specifications for the class of work involved. Sidewalk and curb and gutter removals shall be in accordance with ARTICLE – 4 CONCRETE, Section 4.8.3. and Section 4.8.2. Where grassed areas are encountered, the Contractor shall replace all sod with sod of similar characteristics to that adjacent.

A Concrete Permit is required for all concrete work within the City of Pueblo. A “no fee” Concrete Permit shall be issued by the City Engineering Division for City funded projects. Any concrete work placed without benefit of both permit and inspection by Public Works will not be paid for.

12.3.17 STORM SEWER REHABILITATION SPECIFICATIONS

If any part of a stormwater RCP, HDPE, HPPP, or PVC main or lateral is removed or damaged to facilitate a private utility main installation or replacement, then the stormwater main or lateral must be replaced from the point of damage to the nearest inlet or manhole. If any part of a stormwater Vitrified Clay Pipe (VCP) main or lateral is removed or damaged to facilitate a private utility main installation or replacement, then the entire stormwater main or lateral must be replaced including appurtenant structures that may crumble as a result of the replacement. Metallic pipes, including corrugated metal pipes (CMPs) and cast-iron pipes (CIPs), are subject to corrosion and must be Closed-circuit television (CCTV) inspected by the Stormwater Utility Department to determine the condition of metallic pipes. The condition of the metallic pipe will determine the extent of replacement required. Deviations from this requirement must be approved in writing by the Director of Public Works. In no instance will a patch of the break or a repair sleeve in the stormwater pipe be allowed. The stormwater pipe must be installed at the same grade it was found prior to being disturbed. The Stormwater Utility Department must approve the pipe size and material and perform inspections during installation of the damaged stormwater pipe.

The City of Pueblo maintains a list of qualified contractors who have been through a vetting process and possess the qualifications to perform stormwater point repair projects. Only contractors from this list will be allowed to repair damaged stormwater infrastructure. When a point repair project arises, Stormwater Department staff will evaluate the repairs needed,

determine the unit quantities for the work required and determine which of the qualified contractors would be able to complete the repairs at the lowest cost by using the unit prices provided by each contractor in their bid. The point repair will then be offered to the contractor providing the lowest cost.

Compaction testing shall be performed in accordance with Section 12.3.13 of the City of Pueblo Standard Construction Specifications and Standard Details and testing shall be included for the bedding material.

12.3.18 GRAVEL SURFACED STREETS OR ALLEYS

When trenches are excavated in streets or alleys which have only a gravel surface, Contractor shall replace such surfacing on a compacted backfill with gravel conforming to ARTICLE 6 - AGGREGATE BASE CONSTRUCTION, CLASS 6, equal in depth to that which originally existed or a minimum thickness of two inches (2"). The surface shall conform to the street or alley grade as set by the Engineer. Where the completed surface settles below finished grade, additional gravel base course material shall be placed and compacted immediately to restore the roadbed surface to finished grade and allow drainage.

12.3.19 CONCRETE AND ASPHALT PAVEMENT REMOVAL AND REPLACEMENT

When concrete pavement is removed, the removal shall be to an existing joint or to a sawed joint which is made prior to removal.

The final edges of asphalt removed and replaced shall be along a straight line neatly sawed to a depth which allows the pavement to be removed with no disturbance to the asphalt left in place.

The edges of pavement (either concrete or asphalt) removal and replacement shall extend one foot (1') beyond the edge of the excavation required for pipe installation. The edges of the pavement shall be clean, straight, and free from jagged intrusions and loose pieces. If the edges of the pavement are not straight, the Contractor shall saw cut back to a point where a straight edge can be maintained or overlay the asphalt patch with a minimum of 3x the nominal aggregate size asphaltic overlay extending two feet (2') beyond the edges of the asphalt patch. Concrete or asphalt removed from the trench surface shall not be used in the initial backfill, and Article 12-3-24 all pieces exceeding eight inches (8") in any dimension shall be removed from the site.

If the distance from the lip line of the curb & gutter to the trench is less than 4 feet (4’), all asphalt shall be removed from lip to the trench line.

12.3.20 ASPHALT PAVED STREETS

When trenches for public mains are excavated in existing streets having an asphalt surface, the Contractor shall replace such surfacing as follows:

(a) Place controlled low strength materials (CLSM) (flowable fill) having a minimum thickness of one (1) foot below the hot asphalt bituminous pavement.

(b) Place hot bituminous asphalt pavement wearing surface having a minimum compacted thickness equal to the original pavement, or four inches (4"), whichever is greater.

All the foregoing materials and methods of application shall comply with ARTICLE 6 - AGGREGATE BASE CONSTRUCTION and ARTICLE 8 - PAVEMENT.

Outside of trench areas, the Contractor shall restore damaged bituminous surfaced streets to the condition which existed prior to construction. The Contractor shall make these repairs at their own expense if the damage is a result of their operations.

12.3.21 CONCRETE PAVED STREETS

When trenches are excavated in streets constructed of concrete, the Contractor shall replace said concrete with an equivalent concrete pavement. Said concrete pavement shall have a minimum thickness conforming to ARTICLE 8 - PAVEMENT and shall be placed on six inches (6") of Class 6 base conforming to ARTICLE 6 - AGGREGATE BASE CONSTRUCTION.

Outside of trench areas, the Contractor shall restore damaged concrete surfaced streets to the condition which existed prior to construction. The Contractor shall make these repairs at his own expense if the damage is a result of his operations.

12.3.22 CONCRETE CURB AND GUTTER, SIDEWALK, DRIVEWAY, ALLEY PAN AND DIP REMOVAL

Concrete curb and gutter, sidewalks, driveways, alley pans and dips shall be removed to the limits designated by the Engineer. All joints (except expansion joints) shall be saw cut prior to removal unless otherwise directed by the Engineer. Any concrete broken or disturbed by the Contractor outside of the designated limits shall be replaced at the expense of the Contractor at no cost to the project. Sawing shall be considered incidental and subsidiary to the pipeline excavation. See ARTICLE 4 – CONCRETE for additional requirements.

12.3.23 ASPHALT OR CONCRETE UNAVAILABLE OR INCLEMENT WEATHER ON COMPLETION OF BACKFILL

Upon completion of backfill operations, if hot bituminous asphalt or concrete is unavailable or the weather is inclement, a temporary asphalt surface - cold mix or other approved material - having a two inch (2") minimum thickness shall be installed immediately on the surface of the trench, cut, or hole in an asphalt or concrete street, walk, curb and gutter, etc. before the Contractor leaves the excavation site or continues the trench to the next block, intersection, or alley, unless otherwise allowed by the Engineer. Cold mix asphalt and its placement shall be furnished at the Contractor's expense and shall not be a pay item.

As soon as hot bituminous asphalt or concrete becomes available, the temporary asphalt surface shall be removed and replaced with permanent asphalt or concrete in accordance with prevailing City construction and material specifications for the class of work involved by the Contractor. See ARTICLE 8 – PAVEMENT for additional requirements.

12.4 METHOD OF MEASUREMENT

Method of measurement for storm sewer construction shall be as follows:

(a) Inlets and Manholes - Each inlet or manhole constructed will be counted for payment by the contract unit.

(b) Storm Sewer Pipe - The length of storm sewer pipe of various sizes and types shall be

measured in feet along the centerline of acceptably laid storm sewer from inside of wall to inside of wall of manholes and/or inlets, or to end of pipe (excluding flared end sections).

(c) Riprap - Shall be measured by the ton as evidenced by weight tickets or by the cubic yard as measured in the field. Method shall be determined by the bid schedule.

(d) Flared End Section - Flared end sections shall be counted and paid for as each unit installed.

12.5 BASIS OF PAYMENT

Basis of payment for storm sewer construction shall be as follows:

(a) Inlets and Manholes - Payment for inlets and manholes shall be full compensation to construct the complete unit in accordance with these specifications and the Standard Details. It shall include the ring and cover castings, concrete adjustment rings or brick, and all items incidental to the manhole or inlet.

(b) Storm sewer pipe - Storm sewer pipe will be paid for at the contract unit price for the various sizes and types, installed complete in place. Said price shall include all joint materials, plugs, and other materials to construct in accordance with these specifications, and the standard details. It shall include but not be limited to all costs associated with excavation, shoring, bedding, pipe placement, backfill, compaction, water for compaction, clean-up, landscape restoration, etc. No payment will be made for pipe until backfilling, compaction tests, deflection (go-nogo) test have been accepted by the Engineer.

(c) Riprap - Payment for this item shall be full compensation for all labor and material to furnish and install the riprap, including filter fabric and filter material, and excavation, in accordance with these specifications. Class A filter material shall be included in the bid price for riprap and not paid for separately.

(d) Flared End Section - Payment for this item shall be full compensation for all labor and materials to furnish and install the flared end section, including excavation, backfill, coupling adapters and necessary grading to match to a channel or ditch flowline.

NOTE: R.O.W. WIDTH AND DIMENSION "W" TO BE SHOWN ON THE PLANS

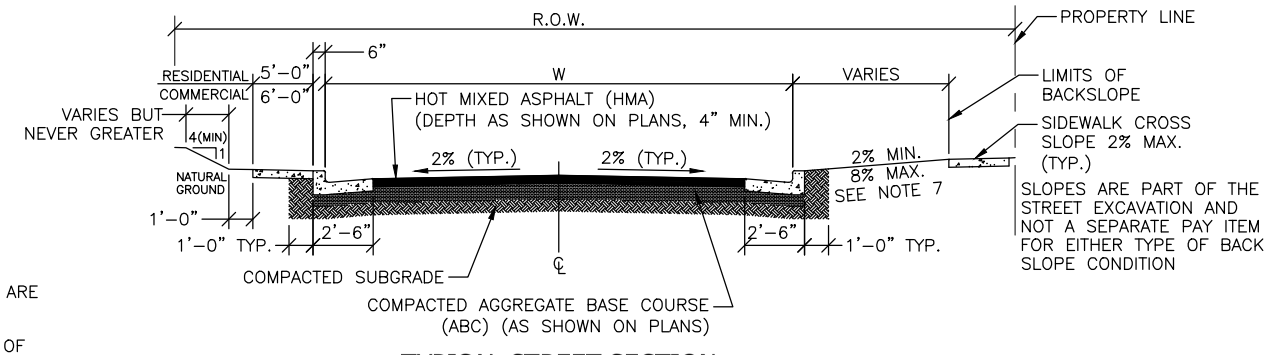

TYPICAL STREET SECTION

NO SCALE

NOTES:

1. ALL UTILITY FIXTURES ENCROACHING ON CONSTRUCTION ARE TO BE MOVED BY OTHERS.
2. ½" EXPANSION JOINTS SHALL BE PLACED AT INTERVALS OF NOT MORE THAN ONE HUNDRED (100) FEET SLOPES IN SIDEWALKS.
3. DOUBLE GUTTER EXPANSION JOINTS SHALL BE PLACED NOT MORE THAN TWO HUNDRED (200) FEET APART.
4. ALL CURB AND GUTTER AND DOUBLE GUTTER EXPANSION JOINTS SHALL BE DOWELED AS SHOWN IN THE DETAILS.
5. CURB & GUTTER EXPANSION JOINTS SHALL BE PLACED NOT MORE THAN TWO HUNDRED (200) FEET APART AND BETWEEN CURB & GUTTER AND SIDEWALK AT POINTS WHERE SIDEWALK ABUTS BUILDING.
6. SEE CURB RAMP DETAILS SD4 & SD6.1 THRU SD6.6 FOR ADDITIONAL REQUIREMENTS.
7. ADA REQUIREMENTS CONTROL MAXIMUM RISE FROM CURB HEAD. MAY EXCEED 8% ONLY WITH PERMISSION OF THE CITY ENGINEER.
8. SLOPE PAVEMENT AT 2% FROM CROWN TO LIP OF GUTTER.
9. WHEN THE FLOW LINE ELEVATIONS ARE NOT EQUAL, PAVEMENT SHALL BE SLOPED 2% FROM HIGHER LIP. MAXIMUM STREET CROSS GRADE SHALL NOT EXCEED 4%.

OFFSET CROWN REQUIREMENT

STREET WIDTH	DIFFERENCE BETWEEN FLOWLINES
44'*	> 0.40'
36'	> 0.35'
32' & LESS	> 0.30'

* = STREETS >44' REQUIRE ENGINEERING APPROVAL

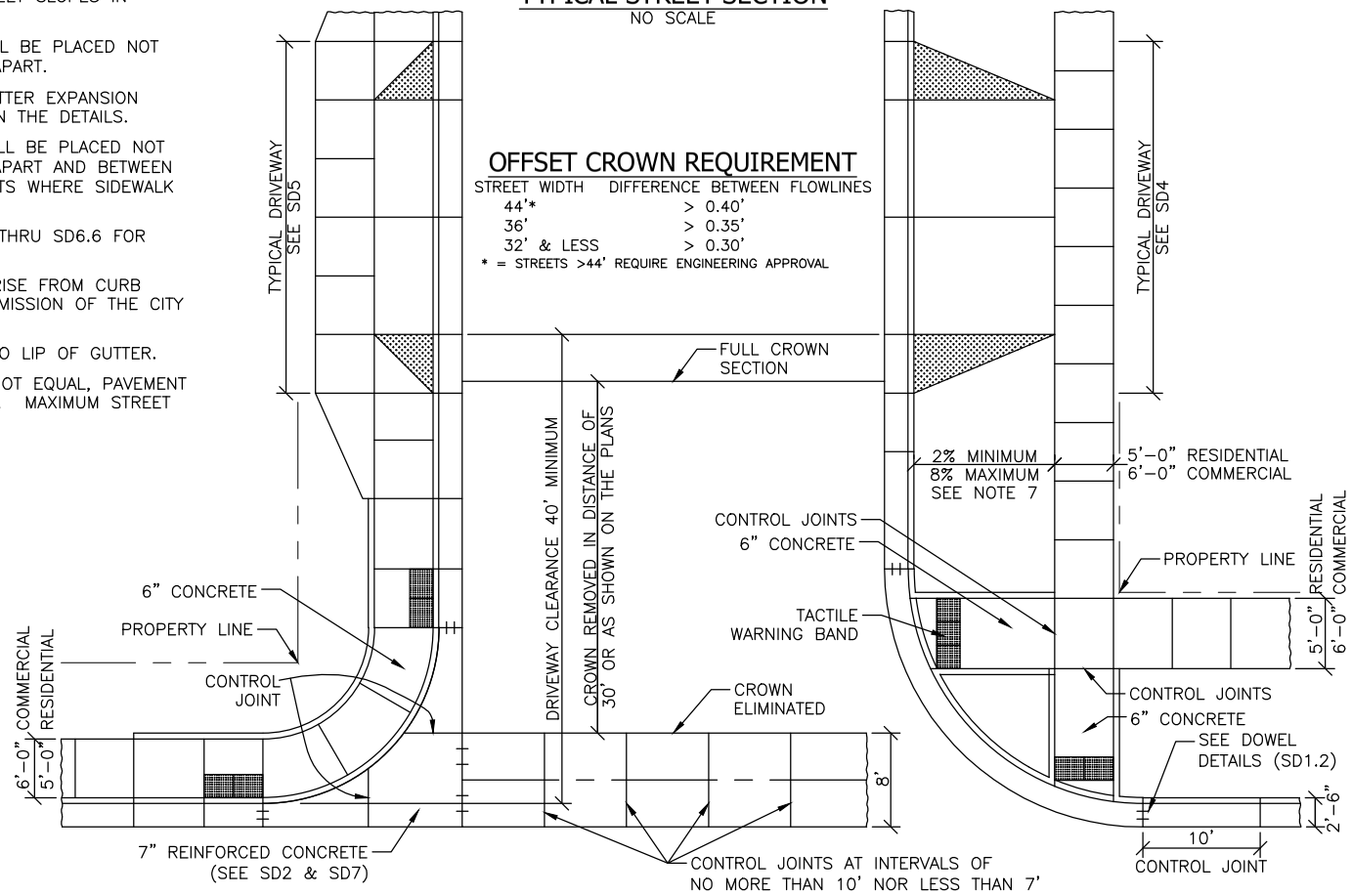

PLAN OF TYPICAL STREET INTERSECTION

NO SCALE

REVISION	
09/03/2024	
10/17/2022	

city of PUEBLO colorado

TYPICAL STREET INTERSECTION

PUBLIC WORKS DEPARTMENT - ENGINEERING DIVISION
211 EAST "D" ST. PUEBLO, CO 81003
(719) 553-2295 PHONE

SD1

DRAWN BY: JM
CHECKED BY: BQ
APPROVED BY: CR

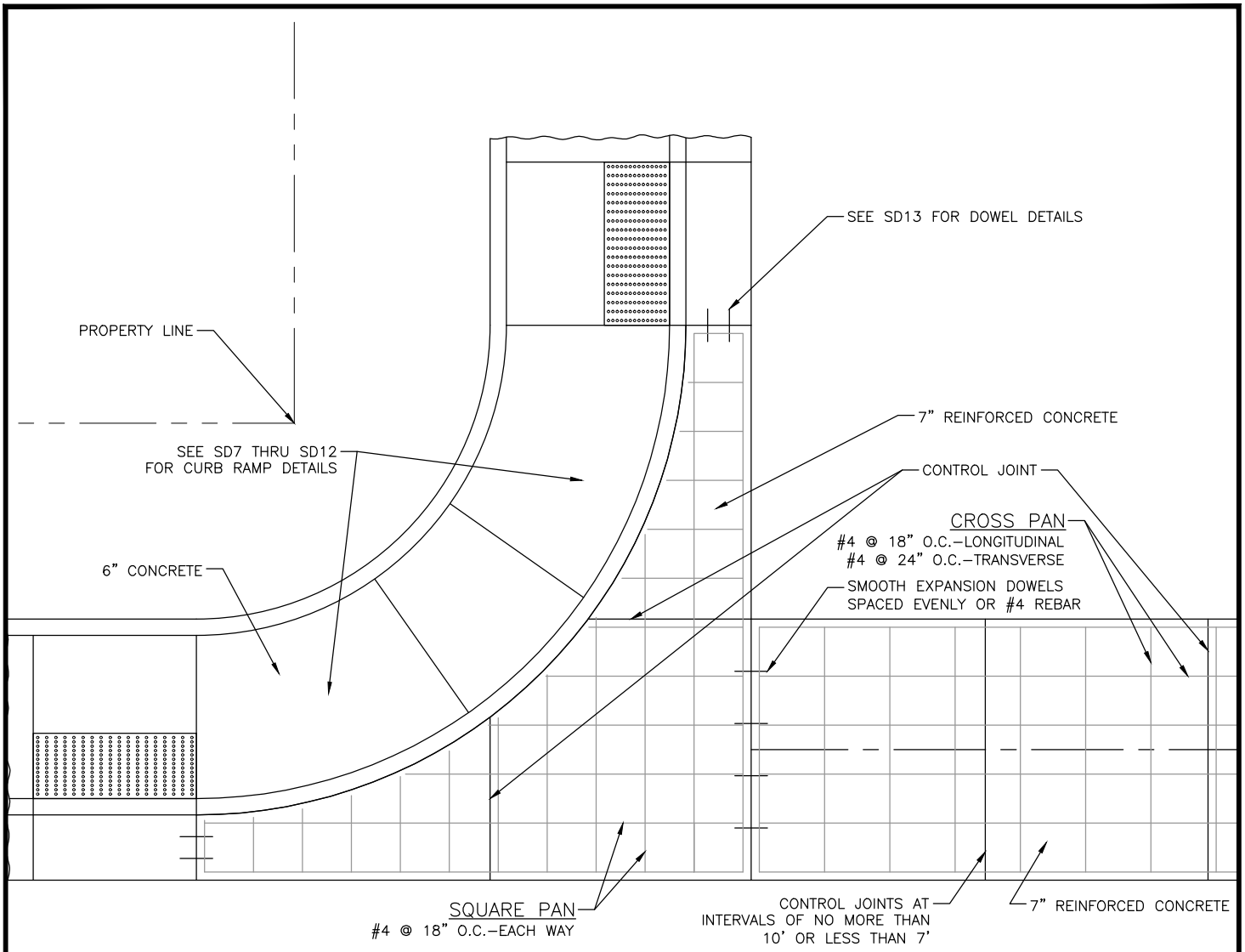

PLAN OF TYPICAL SQUARE PAN & CROSS PAN

SCALE: 1"=5'–0"

NOTES:

1. THE CONTRACTOR SHALL USE #4–GRADE 60 REINFORCING BARS.
2. ALL REINFORCING SHALL BE SECURELY TIED AND PROPERLY SUPPORTED USING APPROVED CHAIRS.
3. DOUBLE GUTTER EXPANSION JOINTS SHALL BE PLACED NOT MORE THAN TWO HUNDRED (200) FEET APART.
4. ALL CURB AND GUTTER AND DOUBLE GUTTER EXPANSION JOINTS SHALL BE DOWELED AS SHOWN IN THE DETAILS. (SEE SD13 FOR DOWELED DETAILS)
5. SEE CURB RAMP DETAILS FOR CONTROL AND EXPANSION JOINT LOCATIONS AT CORNERS.

09/03/2024	
10/17/2022	
REVISION	

city of PUEBLO colorado

SQUARE PAN & CROSS PAN DETAIL

PUBLIC WORKS DEPARTMENT - ENGINEERING DIVISION
211 EAST "D" ST. PUEBLO, CO 81003
(719) 553-2295 PHONE

SD2

DRAWN BY: JM
CHECKED BY: BQ
APPROVED BY: CR

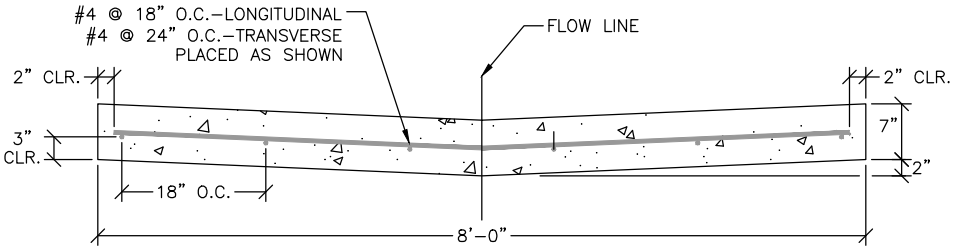

CROSS PAN DETAIL

SCALE: 1"=2'–0"

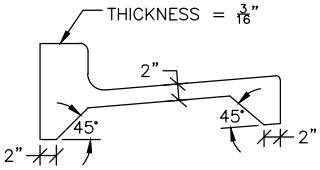

TEMPLATE

SCALE: 1"=2'–0"

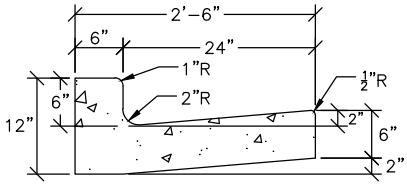

STANDARD CURB & GUTTER

SCALE: 1"=2'–0"

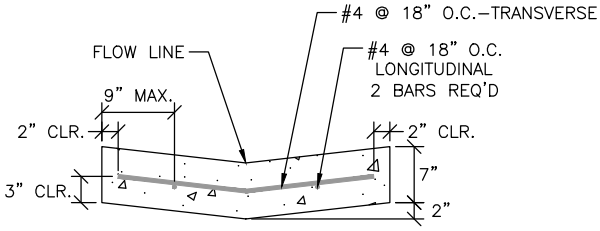

3'-0" GUTTER

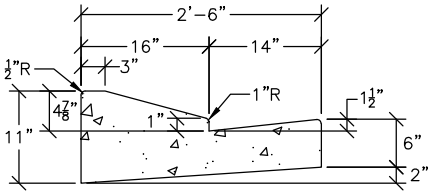

MODIFIED RAMP CURB & GUTTER

SCALE: 1"=2'–0"

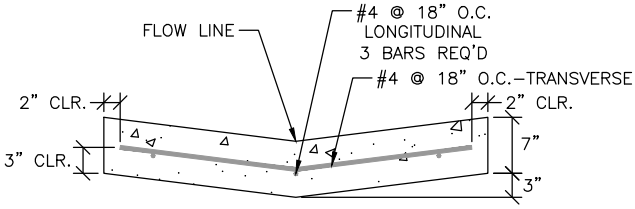

4'-0" GUTTER

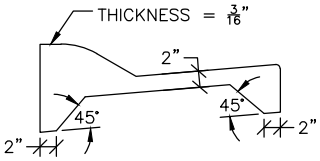

TEMPLATE

SCALE: 1"=2'–0"

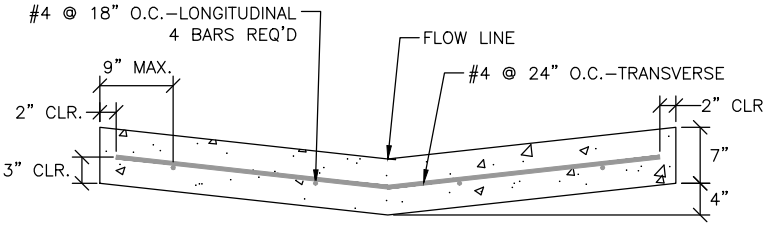

6'-0" GUTTER

DOUBLE GUTTER DETAILS

SCALE: 1"=2'–0"

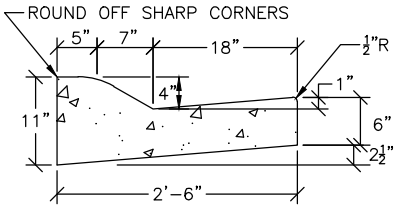

ROLLED CURB & GUTTER

SCALE: 1"=2'–0"

NOTES:

1. PROVIDE 2–#4 REINFORCING BARS IN GUTTER SECTIONS AT ALLEYS – SEE SD5 & SD6.
2. PROVIDE TOOLED CONTROL JOINTS @ 10' O.C. ALL CURB AND GUTTER SHALL HAVE EXPANSION JOINTS AT 200 FEET O.C.–MAXIMUM.
3. SEE APPLICABLE DETAILS FOR GUTTER SLOPE MODIFICATIONS AT CURB RAMPS.

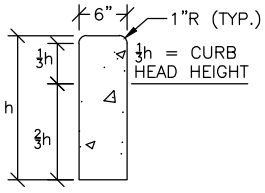

6" CURB HEAD

SCALE: 1"=2'–0"

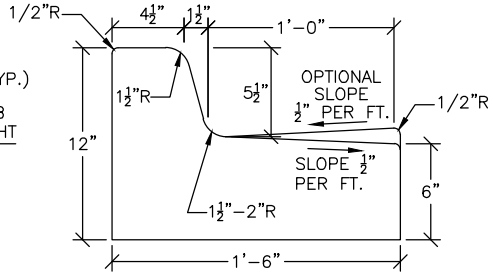

CURB & GUTTER TYPE 2

SECT. 1-B

SCALE: 1"=1'–0"

	city of PUEBLO colorado	**CONCRETE CURB & GUTTER, DOUBLE GUTTER AND CROSS PAN**	SD3
09/03/2024		PUBLIC WORKS DEPARTMENT - ENGINEERING DIVISION	DRAWN BY: JM
10/17/2022		211 EAST "D" ST. PUEBLO, CO 81003	CHECKED BY: BQ
REVISION		(719) 553-2295 PHONE	APPROVED BY: CR

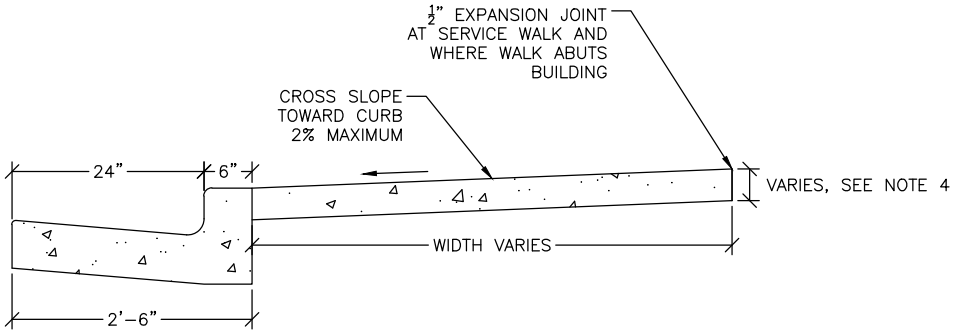

SIDEWALK DETAIL

SCALE: 1"=2'-0"

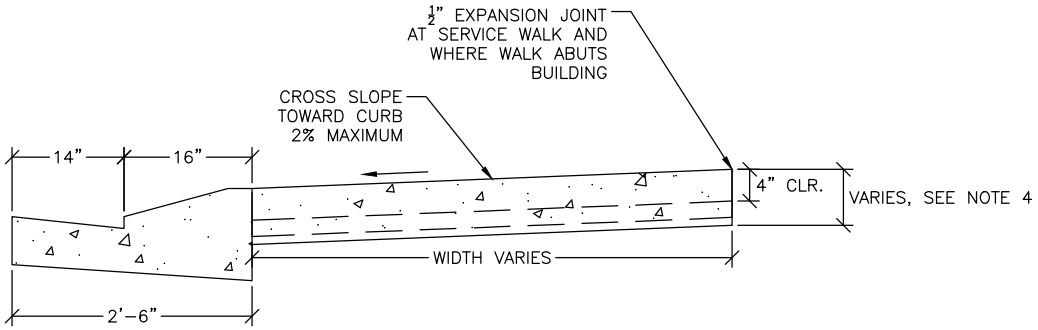

SIDEWALK DETAIL

SCALE: 1"=2'-0"

NOTES:

1. THAT PORTION OF ANY SIDEWALK AT A DRIVEWAY CROSSING OR AT ANY PROBABLE DRIVEWAY CROSSING MUST BE AT LEAST 6" THICK. THIS REGULATION APPLIES TO ALL NEW SIDEWALK CONSTRUCTION AND ALL SIDEWALK REPLACEMENT.
2. ½" EXPANSION JOINTS SHALL BE PLACED AT INTERVALS OF NOT MORE THAN ONE HUNDRED (100) FEET APART IN SIDEWALKS.
3. CONTROL JOINTS ARE TO BE AT 5' UNLESS OTHERWISE DIRECTED BY THE CITY.
4. SIDEWALK CONCRETE THICKNESS IS TO BE CONSTRUCTED AT 7" REINFORCED AT COMMERCIAL DRIVEWAYS AND ALLEYS; 6" AT RESIDENTIAL DRIVEWAYS AND 4" AT ALL OTHER LOCATIONS.

	city of PUEBLO colorado	**ATTACHED SIDEWALK DETAILS**	SD4
09/03/2024		PUBLIC WORKS DEPARTMENT - ENGINEERING DIVISION 211 EAST "D" ST. PUEBLO, CO 81003 (719) 553-2295 PHONE	DRAWN BY: JM
10/17/2022			CHECKED BY: BQ
REVISION			APPROVED BY: CR

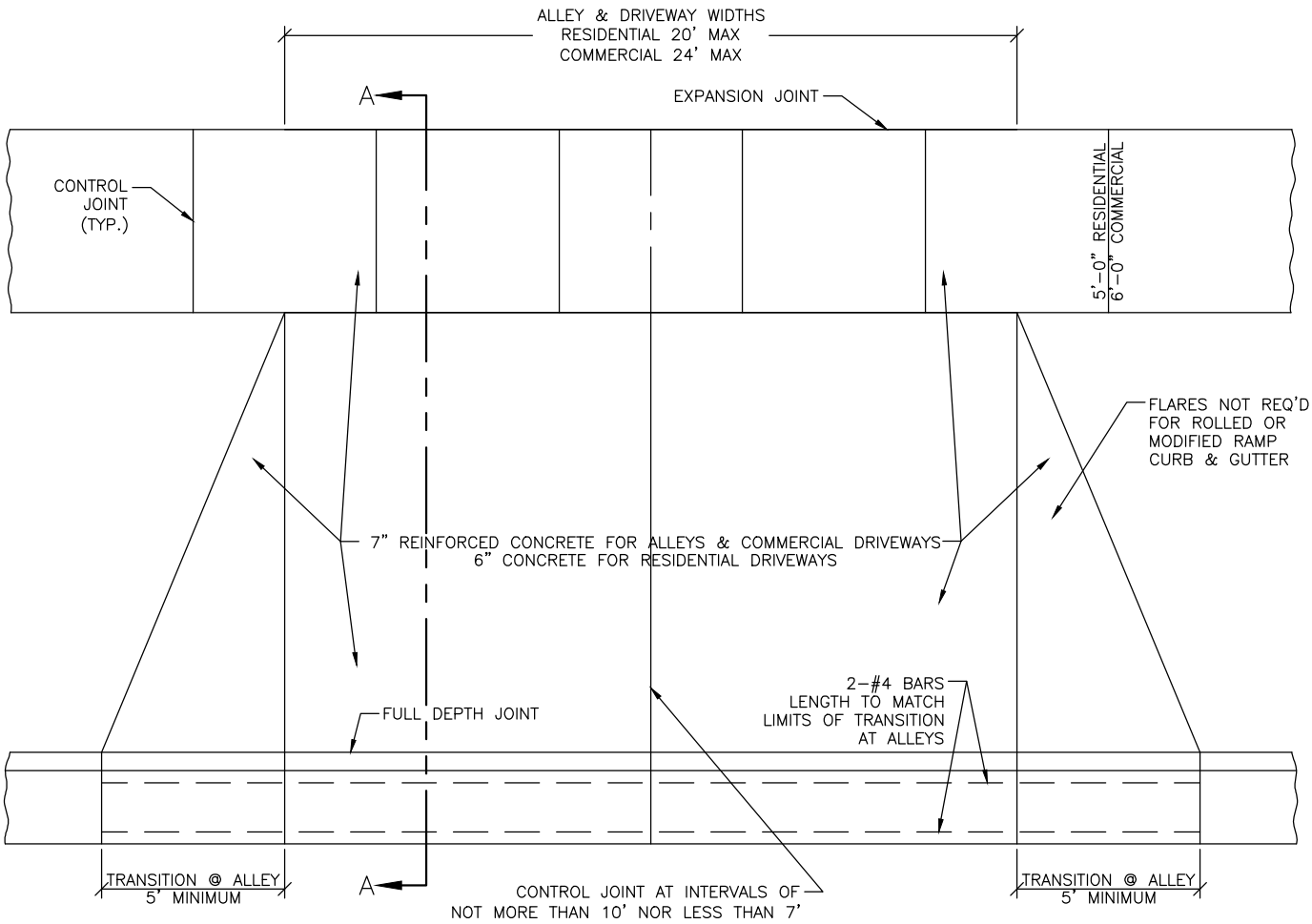

PLAN OF TYPICAL ALLEY APPROACH & DRIVEWAY DETAIL FOR SETBACK SIDEWALK

SCALE: 1"=5'-0"

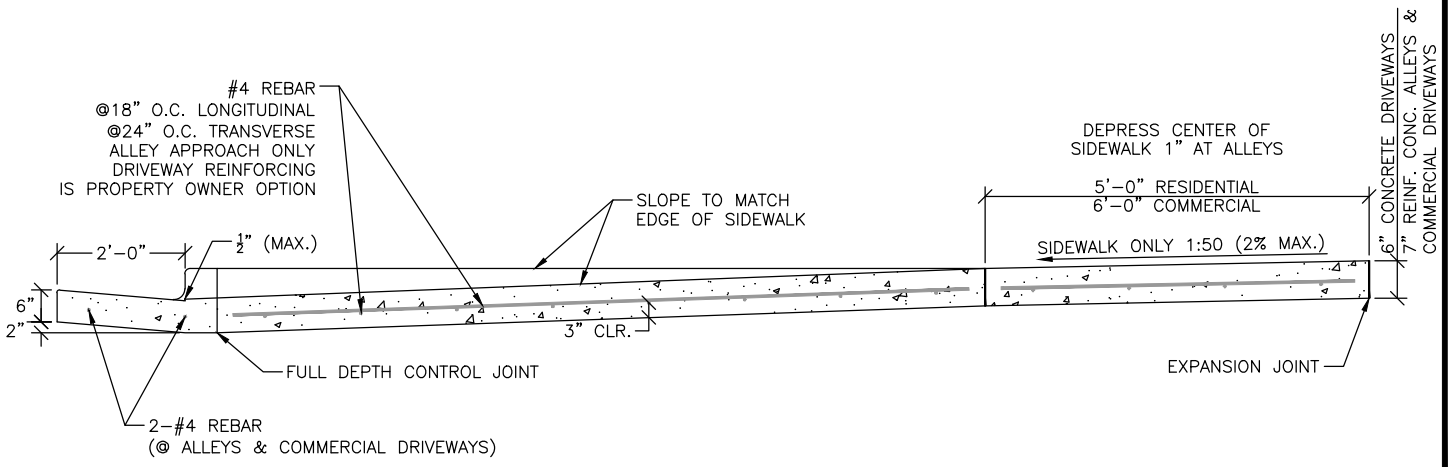

SECTION A-A - ALLEY & DRIVEWAY GUTTER DETAIL

SCALE: 1"=3'-0"

	city of PUEBLO colorado	**TYPICAL ALLEY APPROACH & DRIVEWAY DETAIL FOR SETBACK SIDEWALK**	SD5
09/03/2024		PUBLIC WORKS DEPARTMENT - ENGINEERING DIVISION 211 EAST "D" ST. PUEBLO, CO 81003 (719) 553-2295 PHONE	DRAWN BY: JM
10/17/2022			CHECKED BY: BQ
REVISION			APPROVED BY: CR

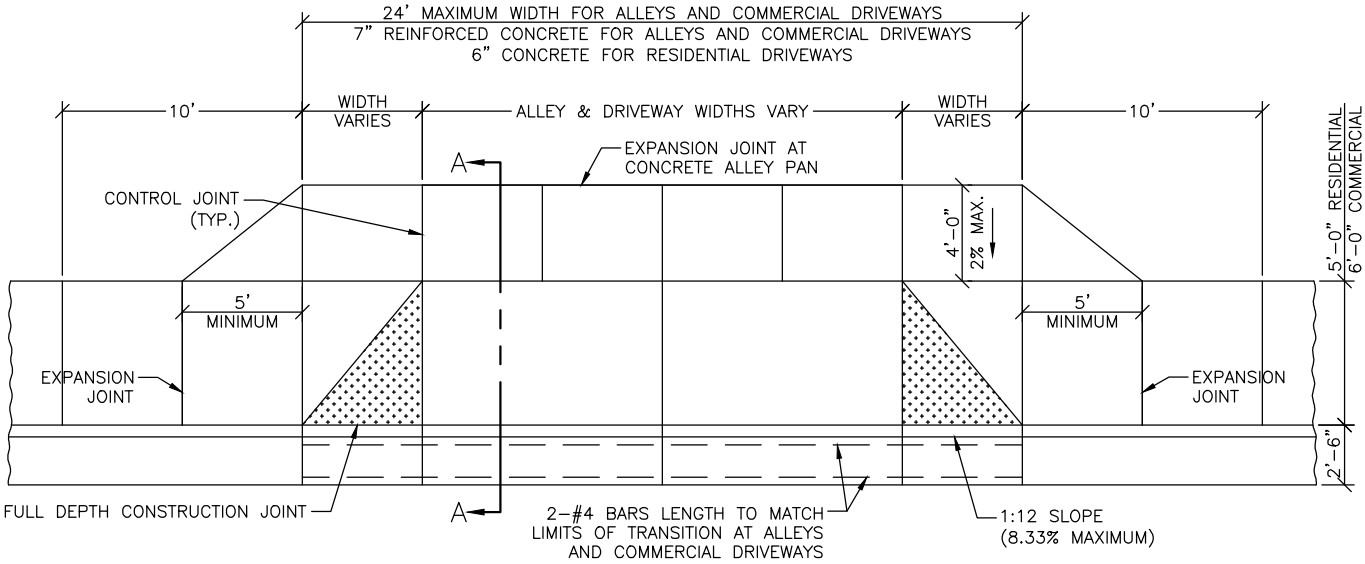

PLAN OF TYPICAL ALLEY APPROACH & DRIVEWAY DETAIL FOR ATTACHED SIDEWALK

SCALE: 1"=8'-0"

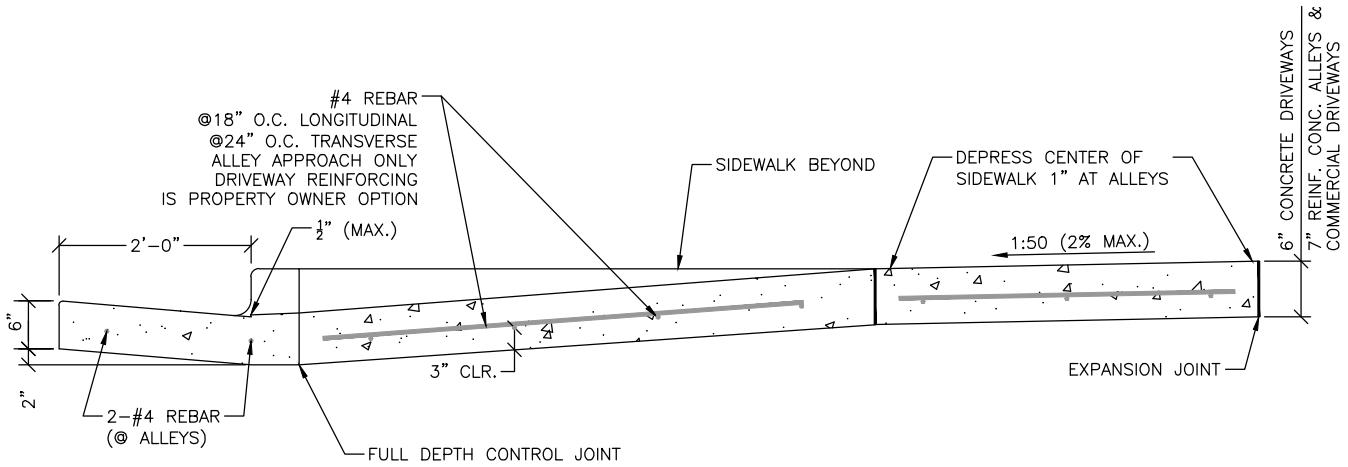

SECTION A-A - ALLEY & DRIVEWAY GUTTER DETAIL

SCALE: 1"=2'-0"

	city of PUEBLO colorado	**TYPICAL ALLEY APPROACH & DRIVEWAY DETAIL FOR ATTACHED SIDEWALK**	SD6
09/03/2024		PUBLIC WORKS DEPARTMENT - ENGINEERING DIVISION 211 EAST "D" ST. PUEBLO, CO 81003 (719) 553-2295 PHONE	DRAWN BY: JM CHECKED BY: BQ APPROVED BY: CR
10/17/2022			
REVISION			

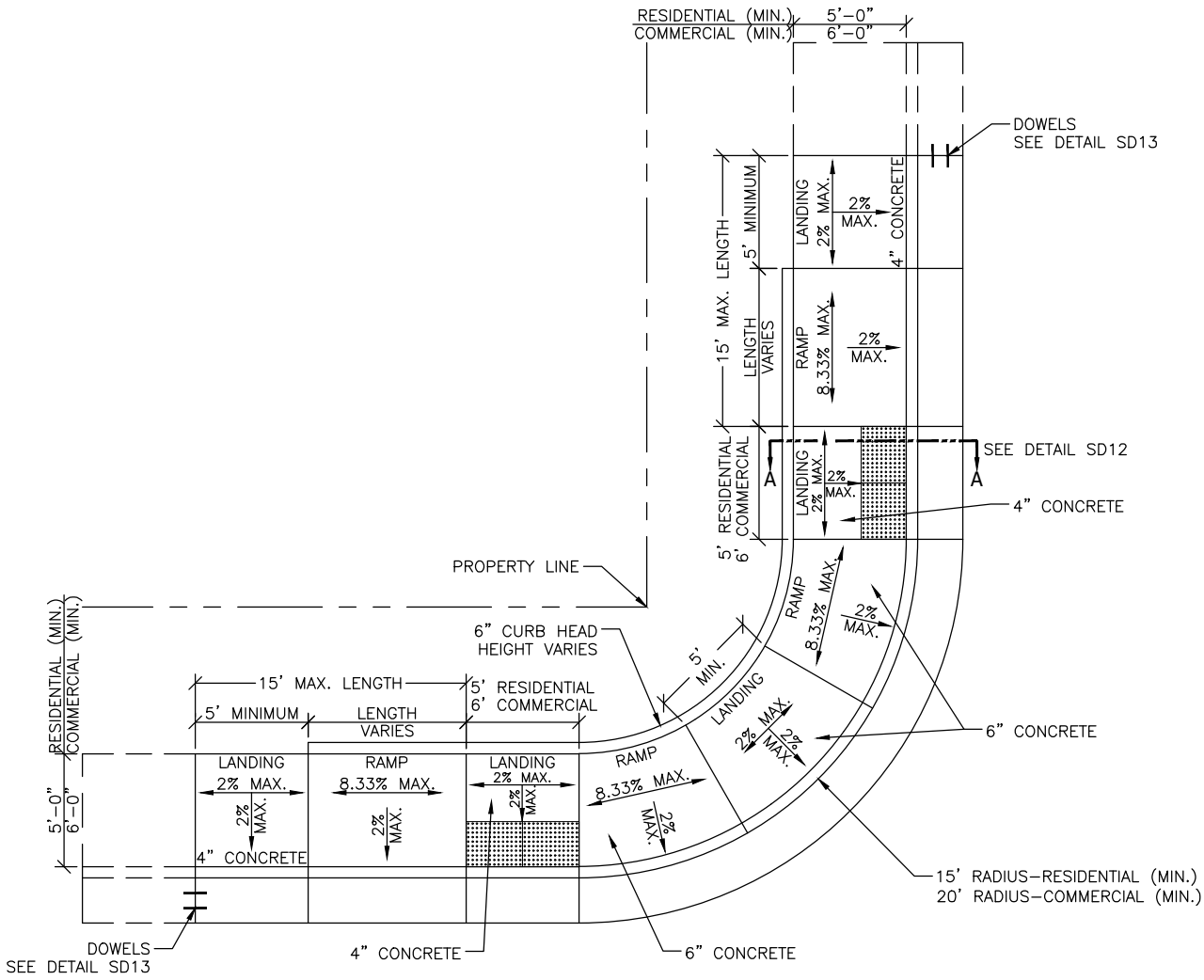

TYPE A RAMP

SCALE: 1"=8'-0"

NOTES:

1. ALL CURB RAMPS SHALL BE CONSTRUCTED TO CONFORM TO ALL APPLICABLE PROVISIONS OF THE PUBLIC RIGHT-OF-WAY ACCESSIBILITY GUIDELINES (PROWAG) LATEST EDITION.
2. RAMP SLOPES SHALL NOT BE STEEPER THAN 8.33%. DIMENSIONS AND OR ARRANGEMENTS SHOWN SHALL BE MODIFIED AS NECESSARY TO MEET THIS REQUIREMENT.
3. LOCATION OF RAMPS MAY BE ADJUSTED TO FIT FIELD CONDITIONS AS DIRECTED BY THE ENGINEER.
4. ALL CROSS SLOPES SHALL NOT EXCEED 2%.

	city of PUEBLO colorado	**CURB RAMP DETAILS - TYPE A RAMP**	SD7
09/03/2024		PUBLIC WORKS DEPARTMENT - ENGINEERING DIVISION 211 EAST "D" ST. PUEBLO, CO 81003 (719) 553-2295 PHONE	DRAWN BY: JM CHECKED BY: BQ APPROVED BY: CR
10/17/2022			
REVISION			

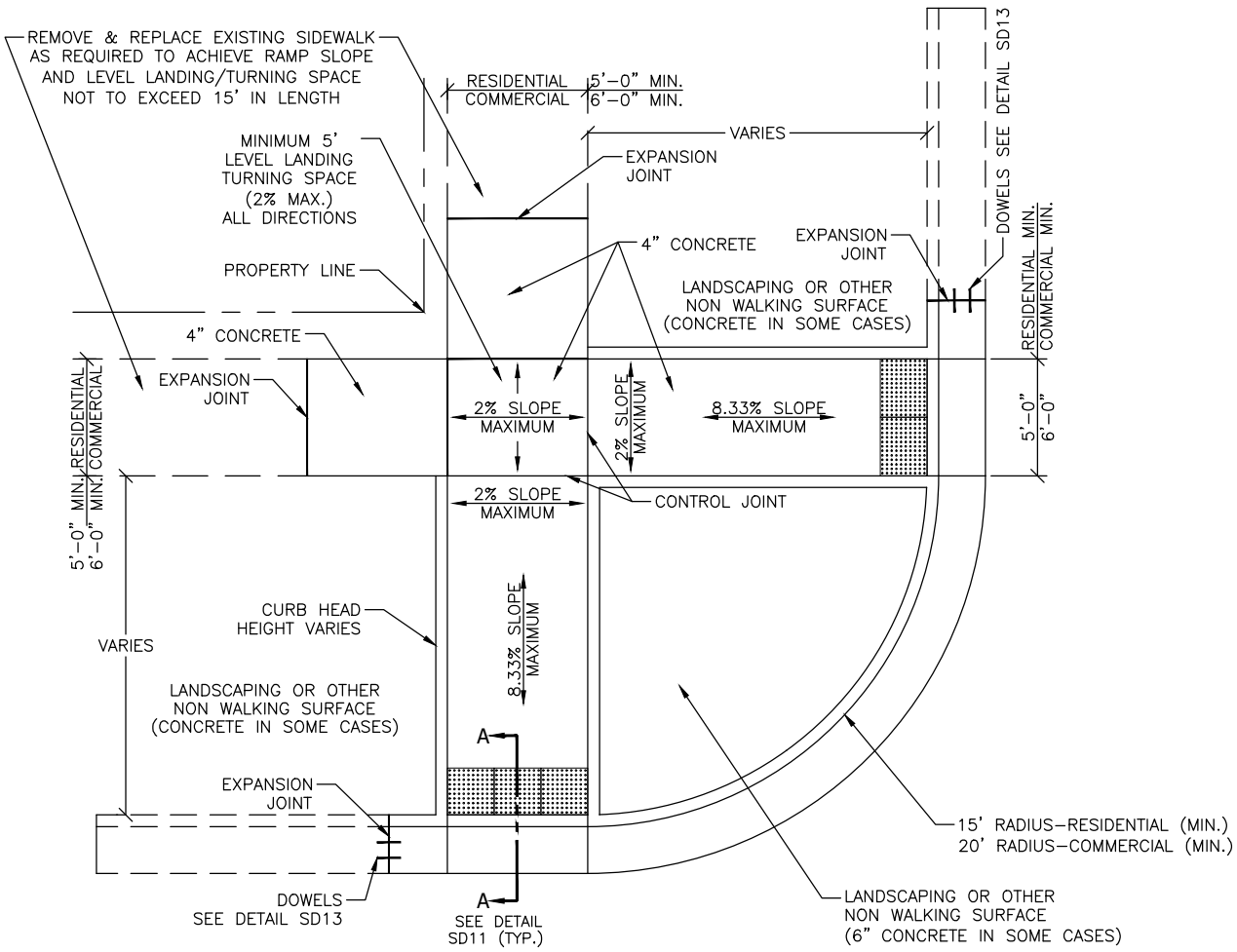

TYPE B RAMP

SCALE: 1"=8'-0"

NOTES:

1. ALL CURB RAMPS SHALL BE CONSTRUCTED TO CONFORM TO ALL APPLICABLE PROVISIONS OF THE PUBLIC RIGHT-OF-WAY ACCESSIBILITY GUIDELINES (PROWAG) LATEST EDITION.
2. RAMP SLOPES SHALL NOT BE STEEPER THAN 8.33%. DIMENSIONS AND OR ARRANGEMENTS SHOWN SHALL BE MODIFIED AS NECESSARY TO MEET THIS REQUIREMENT.
3. LOCATION OF RAMPS MAY BE ADJUSTED TO FIT FIELD CONDITIONS AS DIRECTED BY THE ENGINEER.
4. ALL CROSS SLOPES SHALL NOT EXCEED 2%.

	city of PUEBLO colorado	**CURB RAMP DETAILS - TYPE B RAMP**	SD8
09/03/2024		PUBLIC WORKS DEPARTMENT - ENGINEERING DIVISION 211 EAST "D" ST. PUEBLO, CO 81003 (719) 553-2295 PHONE	DRAWN BY: JM CHECKED BY: BQ APPROVED BY: CR
10/17/2022			
REVISION			

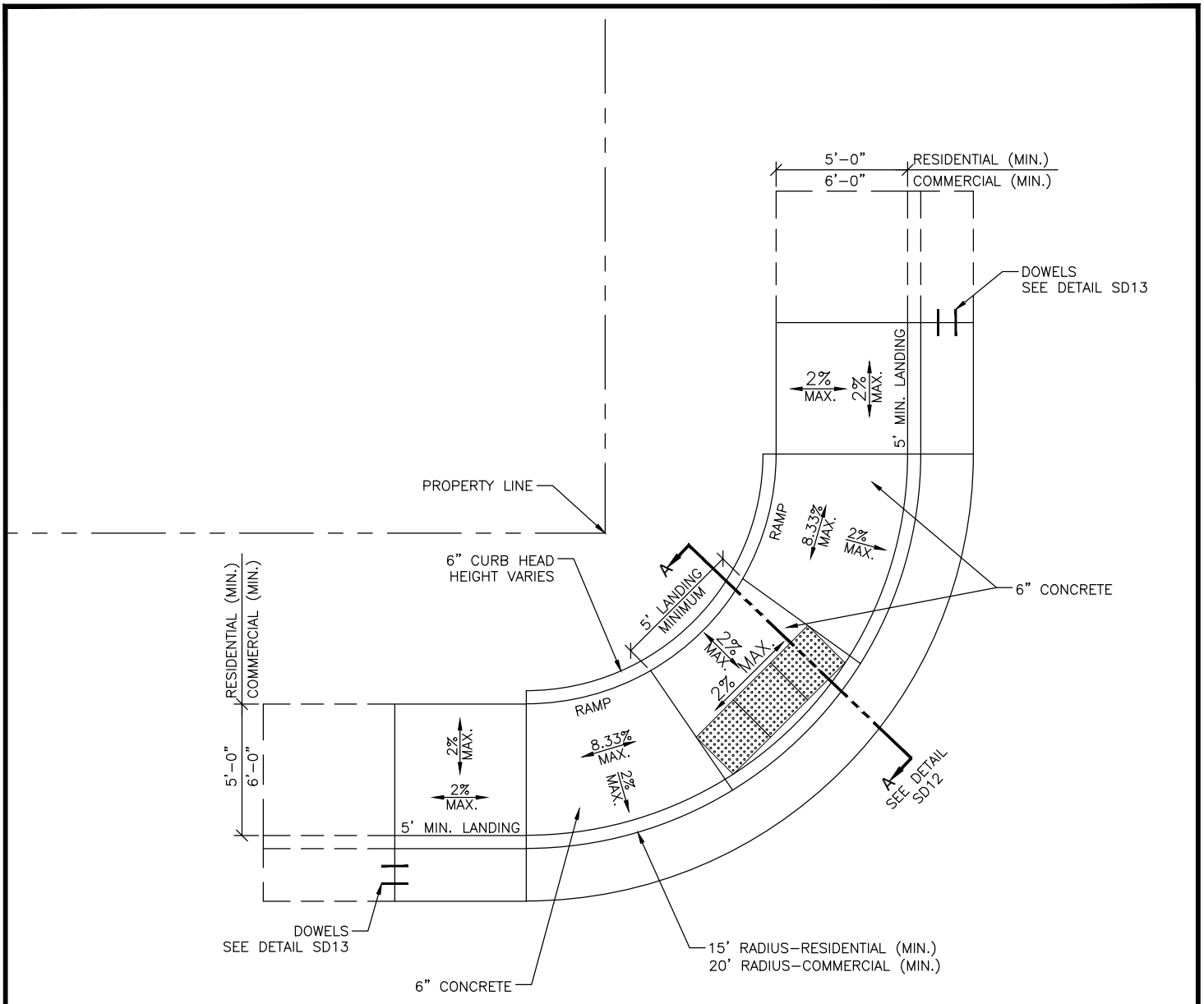

TYPE C RAMP

SCALE: 1"=6'-0"

NOTES:

1. ALL CURB RAMPS SHALL BE CONSTRUCTED TO CONFORM TO ALL APPLICABLE PROVISIONS OF THE PUBLIC RIGHT-OF-WAY ACCESSIBILITY GUIDELINES (PROWAG) LATEST EDITION.
2. RAMP SLOPES SHALL NOT BE STEEPER THAN 8.33%. DIMENSIONS AND OR ARRANGEMENTS SHOWN SHALL BE MODIFIED AS NECESSARY TO MEET THIS REQUIREMENT.
3. LOCATION OF RAMPS MAY BE ADJUSTED TO FIT FIELD CONDITIONS AS DIRECTED BY THE ENGINEER.
4. ALL CROSS SLOPES SHALL NOT EXCEED 2%.

	city of PUEBLO colorado	**CURB RAMP DETAILS - TYPE C RAMP**	SD9
09/03/2024		PUBLIC WORKS DEPARTMENT - ENGINEERING DIVISION 211 EAST "D" ST. PUEBLO, CO 81003 (719) 553-2295 PHONE	DRAWN BY: JM CHECKED BY: BQ APPROVED BY: CR
10/17/2022			
REVISION			

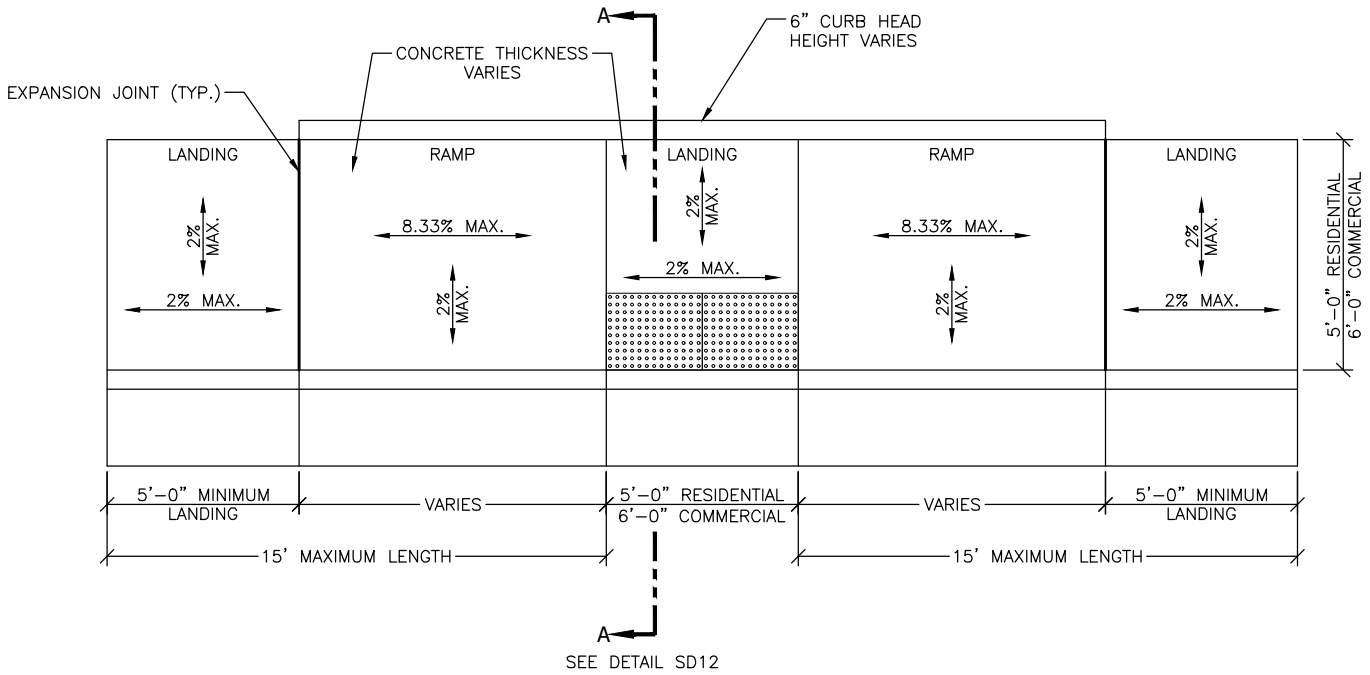

TYPE D RAMP

SCALE: 1"=5'-0"

NOTES:

1. ALL CURB RAMPS SHALL BE CONSTRUCTED TO CONFORM TO ALL APPLICABLE PROVISIONS OF THE PUBLIC RIGHT-OF-WAY ACCESSIBILITY GUIDELINES (PROWAG) LATEST EDITION.
2. RAMP SLOPES SHALL NOT BE STEEPER THAN 8.33%. DIMENSIONS AND OR ARRANGEMENTS SHOWN SHALL BE MODIFIED AS NECESSARY TO MEET THIS REQUIREMENT.
3. LOCATION OF RAMPS MAY BE ADJUSTED TO FIT FIELD CONDITIONS AS DIRECTED BY THE ENGINEER.
4. ALL CROSS SLOPES SHALL NOT EXCEED 2%.

	city of PUEBLO colorado	**CURB RAMP DETAILS - TYPE D RAMP**	SD10
09/03/2024		PUBLIC WORKS DEPARTMENT - ENGINEERING DIVISION 211 EAST "D" ST. PUEBLO, CO 81003 (719) 553-2295 PHONE	DRAWN BY: JM CHECKED BY: BQ APPROVED BY: CR
10/17/2022			
REVISION			

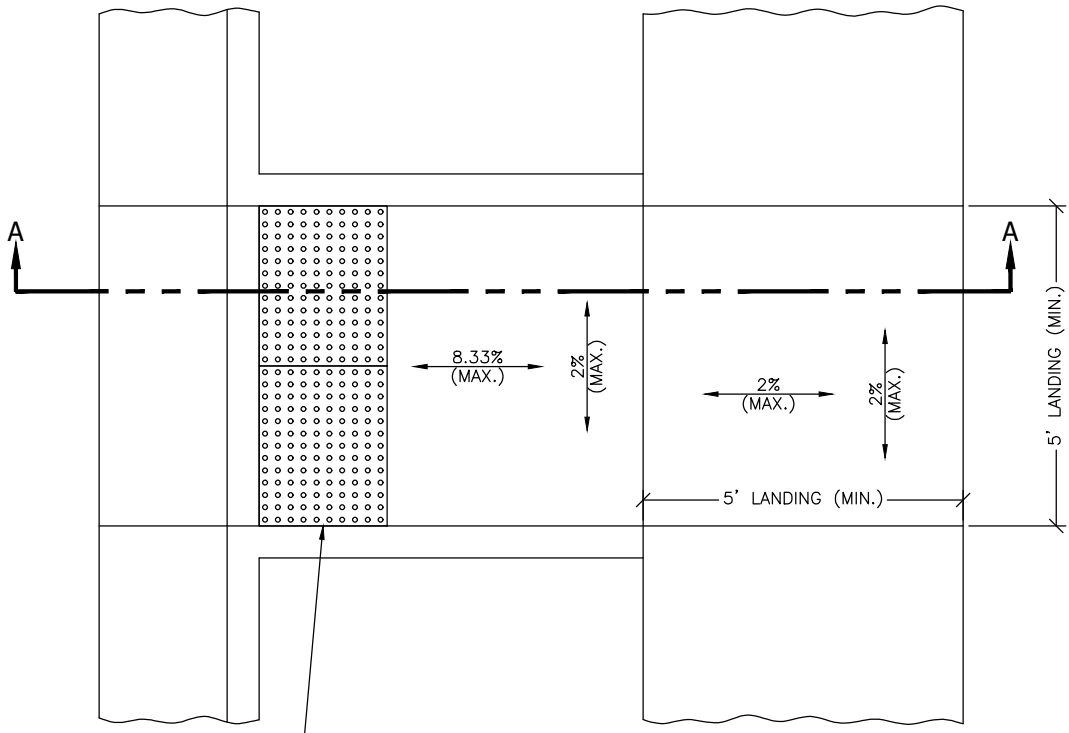

DETECTABLE WARNING SURFACES SHALL BE 24" WIDE AT THE BOTTOM OF EACH RAMP (UNLESS SHOWN OTHERWISE) AND SHALL EXTEND THE FULL WIDTH OF THE RAMP. SEE STANDARD DETAIL SD6.1 THRU SD6.4

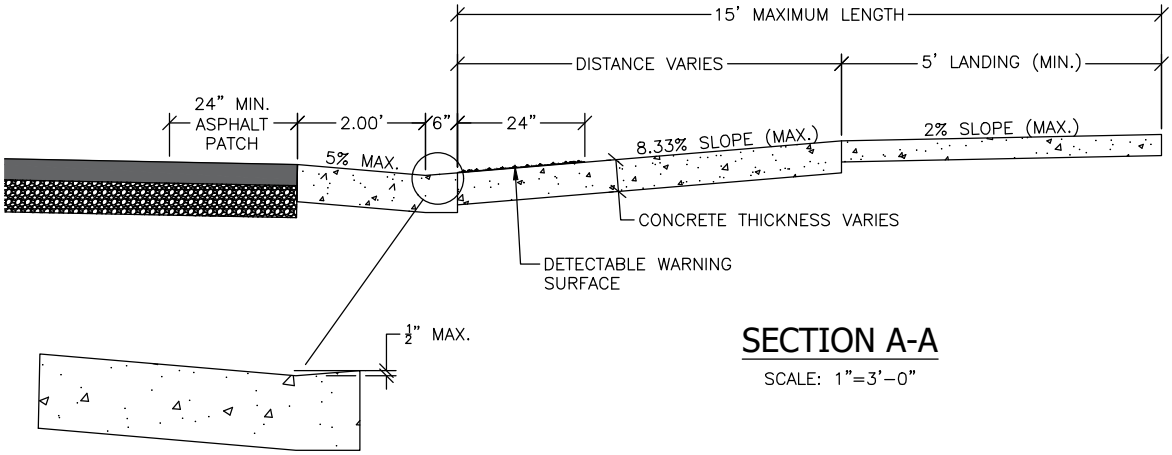

SECTION A-A

SCALE: 1"=3'-0"

NOTES:

1. DETECTABLE WARNING SURFACES SHALL COMPLY WITH SECTION R305 OF THE PUBLIC RIGHT-OF-WAY ACCESSIBILTY GUIDELINES (PROWAG) LATEST EDITION.
2. ALL CURB RAMPS SHALL BE CONSTRUCTED TO CONFORM TO ALL APPLICABLE PROVISIONS OF THE PUBLIC RIGHT-OF-WAY ACCESSIBILITY GUIDELINES (PROWAG) LATEST EDITION.
3. RAMP SLOPES SHALL NOT BE STEEPER THAN 8.33%. DIMENSIONS AND OR ARRANGEMENTS SHOWN SHALL BE MODIFIED AS NECESSARY TO MEET THIS REQUIREMENT.
4. LOCATION OF RAMPS MAY BE ADJUSTED TO FIT FIELD CONDITIONS AS DIRECTED BY THE ENGINEER.
5. ALL CROSS SLOPES SHALL NOT EXCEED 2%.

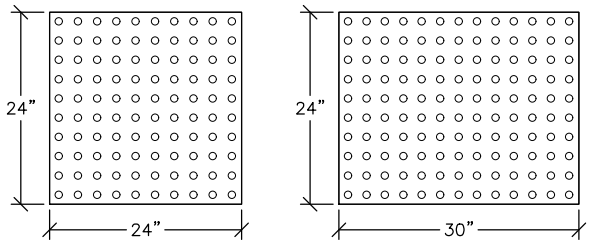

DETECTABLE WARNING SURFACE

SCALE: 1"=2'-0"

	city of PUEBLO colorado	**CURB RAMP DETAILS - DETECTABLE WARNING SURFACES**	SD11
09/03/2024		PUBLIC WORKS DEPARTMENT - ENGINEERING DIVISION 211 EAST "D" ST. PUEBLO, CO 81003 (719) 553-2295 PHONE	DRAWN BY: JM CHECKED BY: BQ APPROVED BY: CR
10/17/2022			
REVISION			

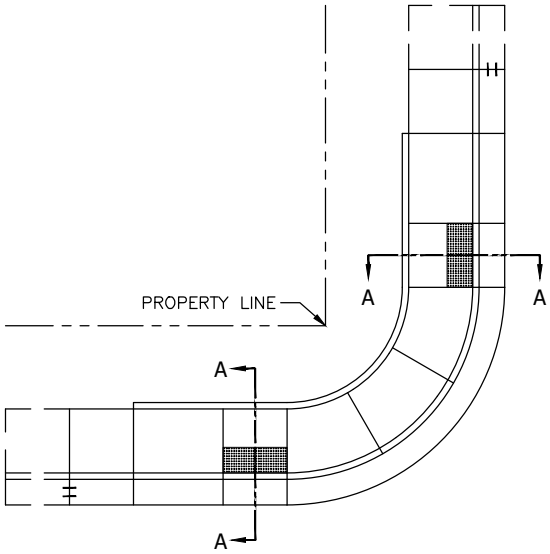

TYPE A RAMP

SCALE: 1"=15'-0"

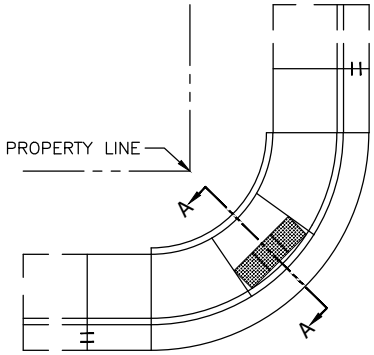

TYPE C RAMP

SCALE: 1"=15'-0"

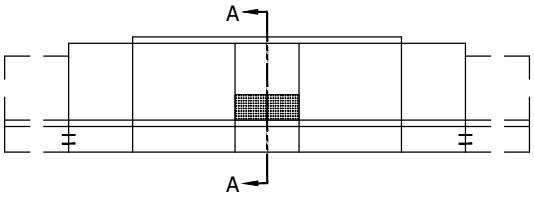

TYPE D RAMP

SCALE: 1"=15'-0"

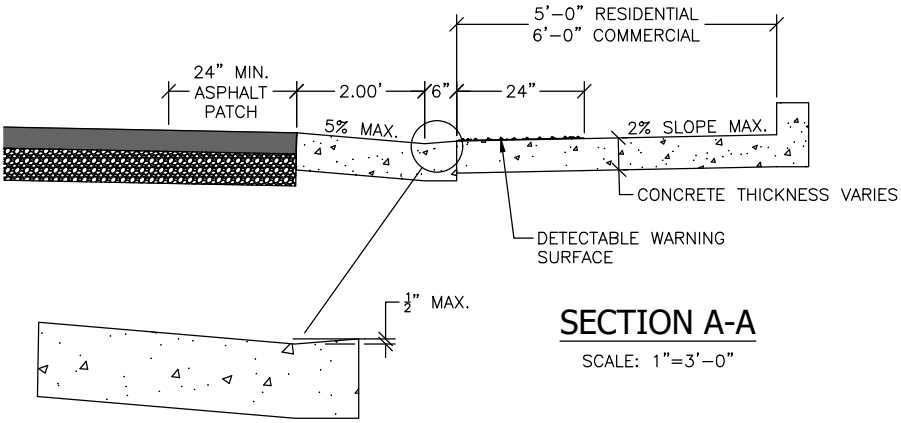

SECTION A-A

SCALE: 1"=3'-0"

NOTES:

1. DETECTABLE WARNING SURFACES SHALL COMPLY WITH SECTION R305 OF THE PUBLIC RIGHT-OF-WAY ACCESSIBILTY GUIDELINES (PROWAG) LATEST EDITION.
2. ALL CURB RAMPS SHALL BE CONSTRUCTED TO CONFORM TO ALL APPLICABLE PROVISIONS OF THE PUBLIC RIGHT-OF-WAY ACCESSIBILITY GUIDELINES (PROWAG) LATEST EDITION.
3. RAMP SLOPES SHALL NOT BE STEEPER THAN 8.33%. DIMENSIONS AND OR ARRANGEMENTS SHOWN SHALL BE MODIFIED AS NECESSARY TO MEET THIS REQUIREMENT.
4. LOCATION OF RAMPS MAY BE ADJUSTED TO FIT FIELD CONDITIONS AS DIRECTED BY THE ENGINEER.
5. ALL CROSS SLOPES SHALL NOT EXCEED 2%.

09/03/2024	
10/17/2022	
REVISION	

city of PUEBLO colorado

CURB RAMP DETAILS - CROSS SECTION

PUBLIC WORKS DEPARTMENT - ENGINEERING DIVISION
211 EAST "D" ST. PUEBLO, CO 81003
(719) 553-2295 PHONE

SD12

DRAWN BY: JM
CHECKED BY: BQ
APPROVED BY: CR

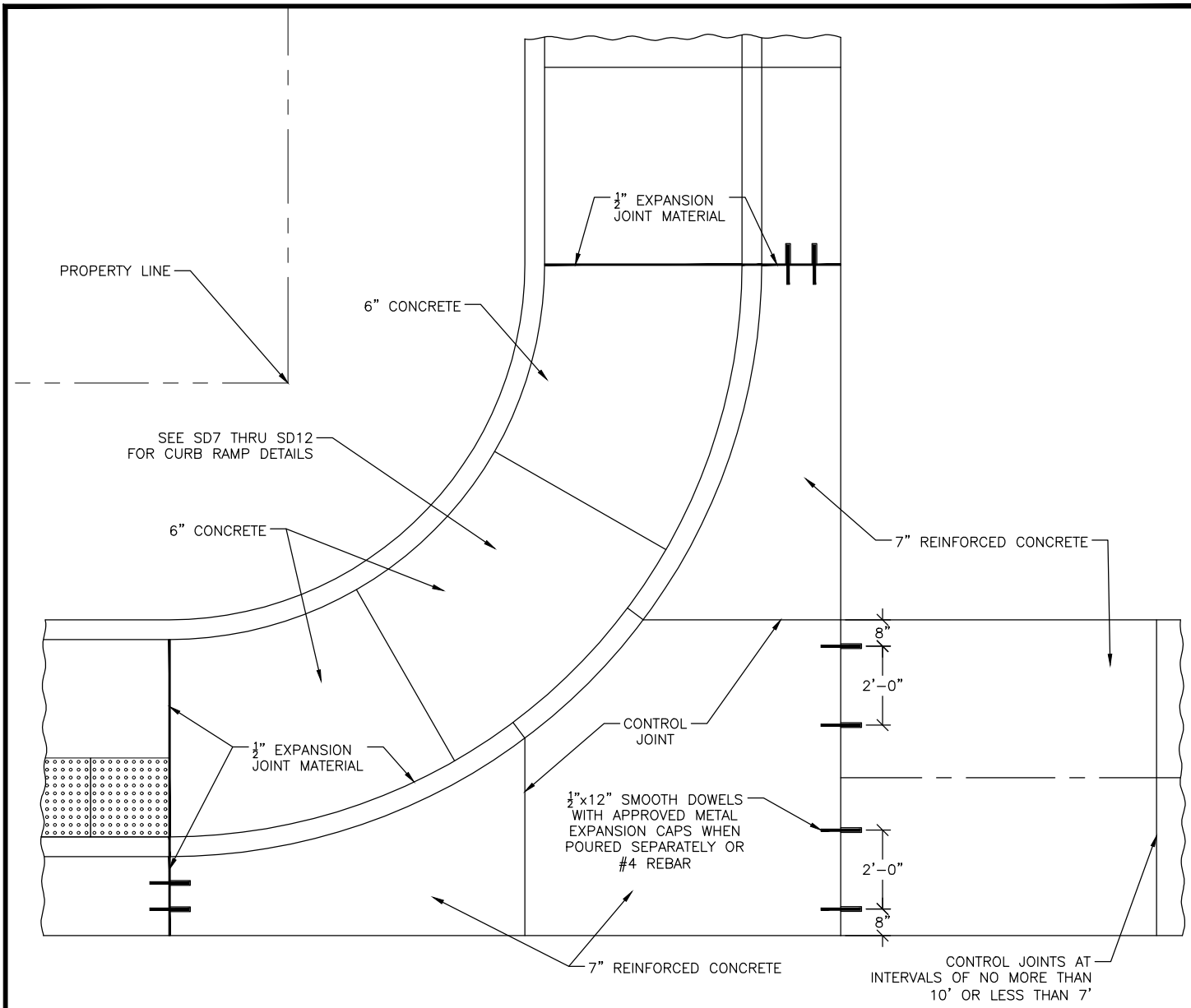

SQUARE PAN AND CROSS PAN

SCALE: 1"=2'-0"

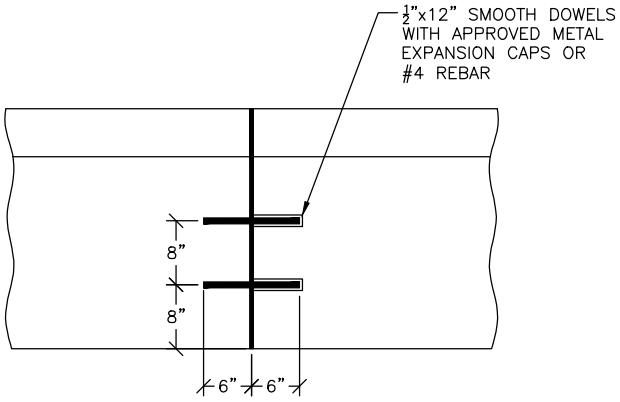

DOWEL DETAIL

SCALE: 1"=2'-0"

	city of PUEBLO colorado	**EXPANSION JOINT & DOWEL DETAILS**	SD13
09/03/2024		PUBLIC WORKS DEPARTMENT - ENGINEERING DIVISION 211 EAST "D" ST. PUEBLO, CO 81003 (719) 553-2295 PHONE	DRAWN BY: JM CHECKED BY: BQ APPROVED BY: CR
10/17/2022			
REVISION			

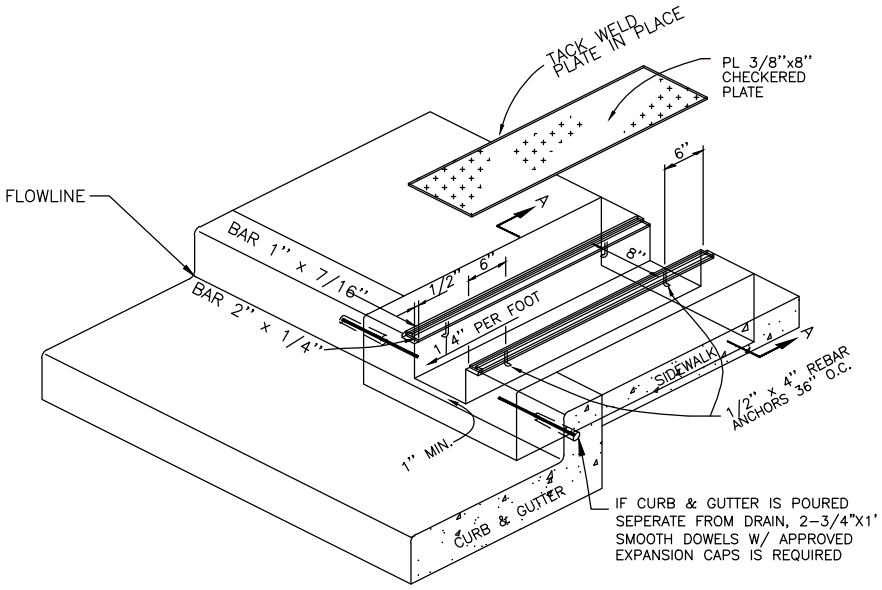

SIDEWALK DRAIN

NO SCALE

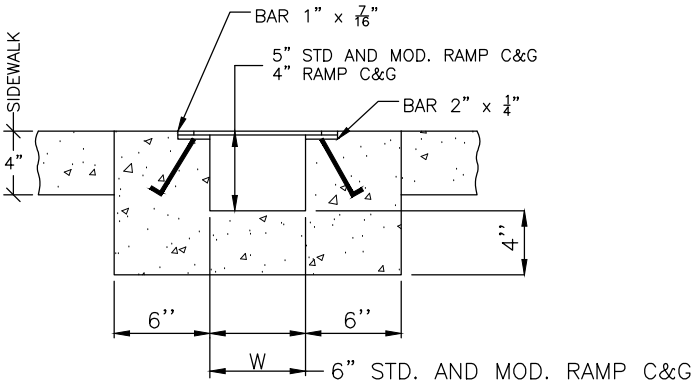

FOR "W" > 8", MUST BE APPROVED BY CITY ENGINEER

SECTION A-A

NO SCALE

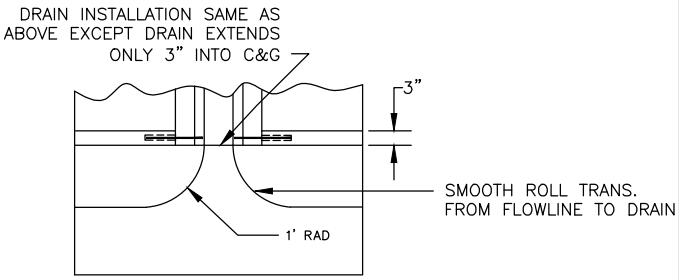

MODIFIED RAMP TRANSITION

NO SCALE

NOTES:

1. ALL STEEL SHALL RECEIVE ONE COAT RED OXIDE METAL PRIMER AND ONE FIELD COAT BLACK ENAMEL.
2. FOR INSTALLATION OF A SIDEWALK DRAIN WHERE THERE IS EXISTING CURB AND GUTTER A FIVE (5') FOOT MINIMUM SECTION OF CURB AND GUTTER MUST BE REMOVED. REMOVAL OF JUST THE CURB HEAD FOR INSTALLATION OF SIDEWALK DRAIN WILL NOT BE ALLOWED

	city of PUEBLO colorado	**SIDEWALK DRAIN DETAIL**	SD14
09/03/2024		PUBLIC WORKS DEPARTMENT - ENGINEERING DIVISION 211 EAST "D" ST. PUEBLO, CO 81003 (719) 553-2295 PHONE	DRAWN BY: JM CHECKED BY: BQ APPROVED BY: CR
10/17/2022			
REVISION			

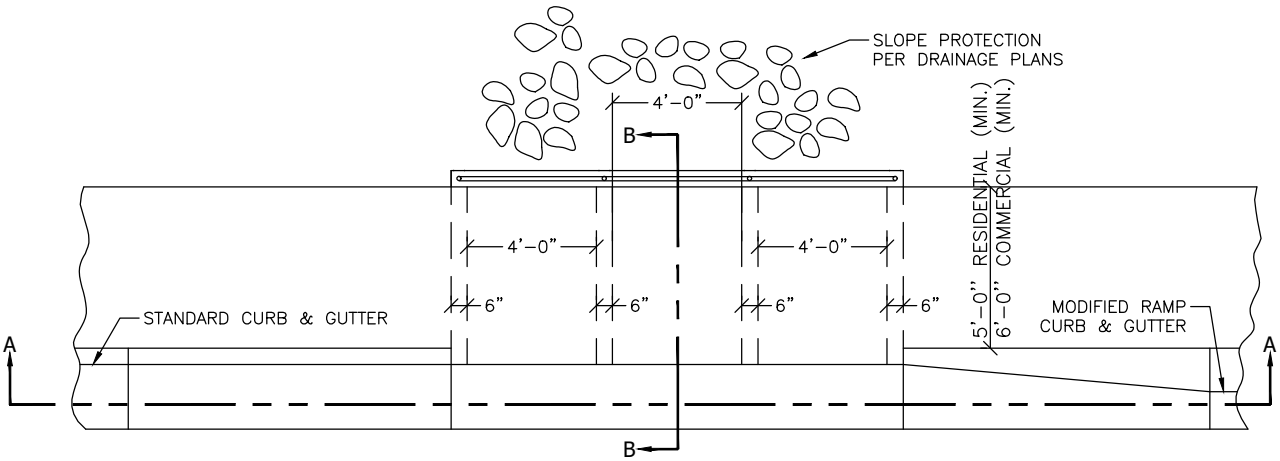

CURB DRAINAGE DETAIL

SCALE: 1"=6'-0"

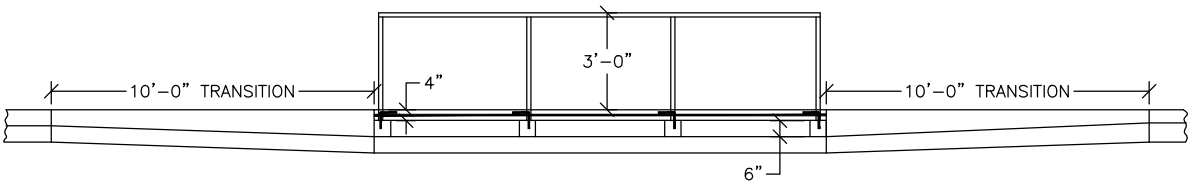

SECTION A-A

SCALE: 1"=6'-0"

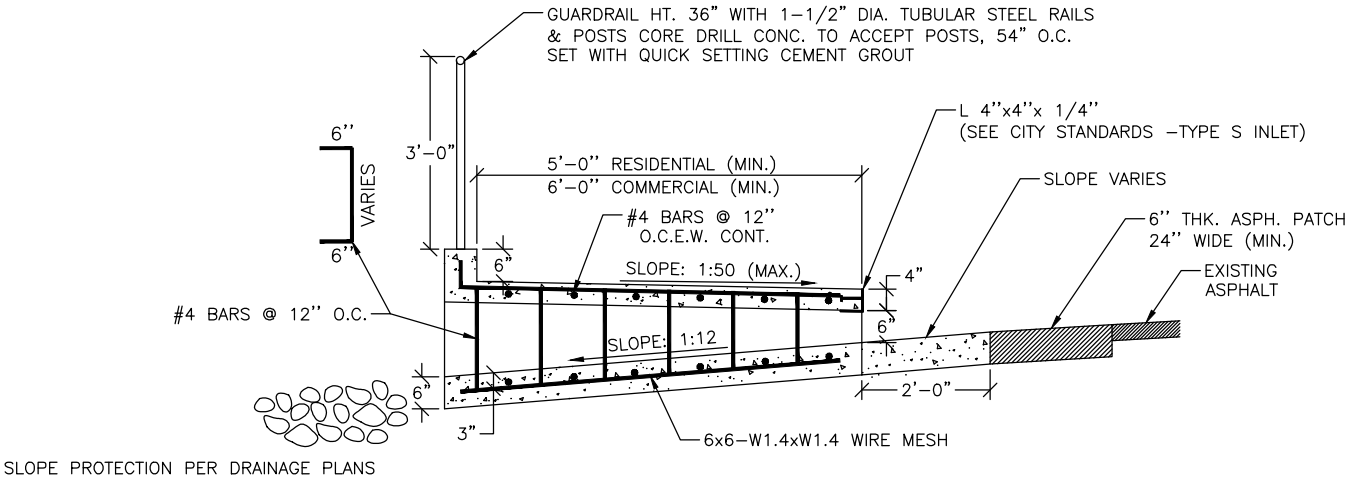

SECTION B-B

SCALE: 1"=3'-0"

	city of PUEBLO colorado	**SIDEWALK CULVERT DETAIL**	SD15
09/03/2024		PUBLIC WORKS DEPARTMENT - ENGINEERING DIVISION 211 EAST "D" ST. PUEBLO, CO 81003 (719) 553-2295 PHONE	DRAWN BY: JM CHECKED BY: CR APPROVED BY: CR
01/01/2021			
REVISION			

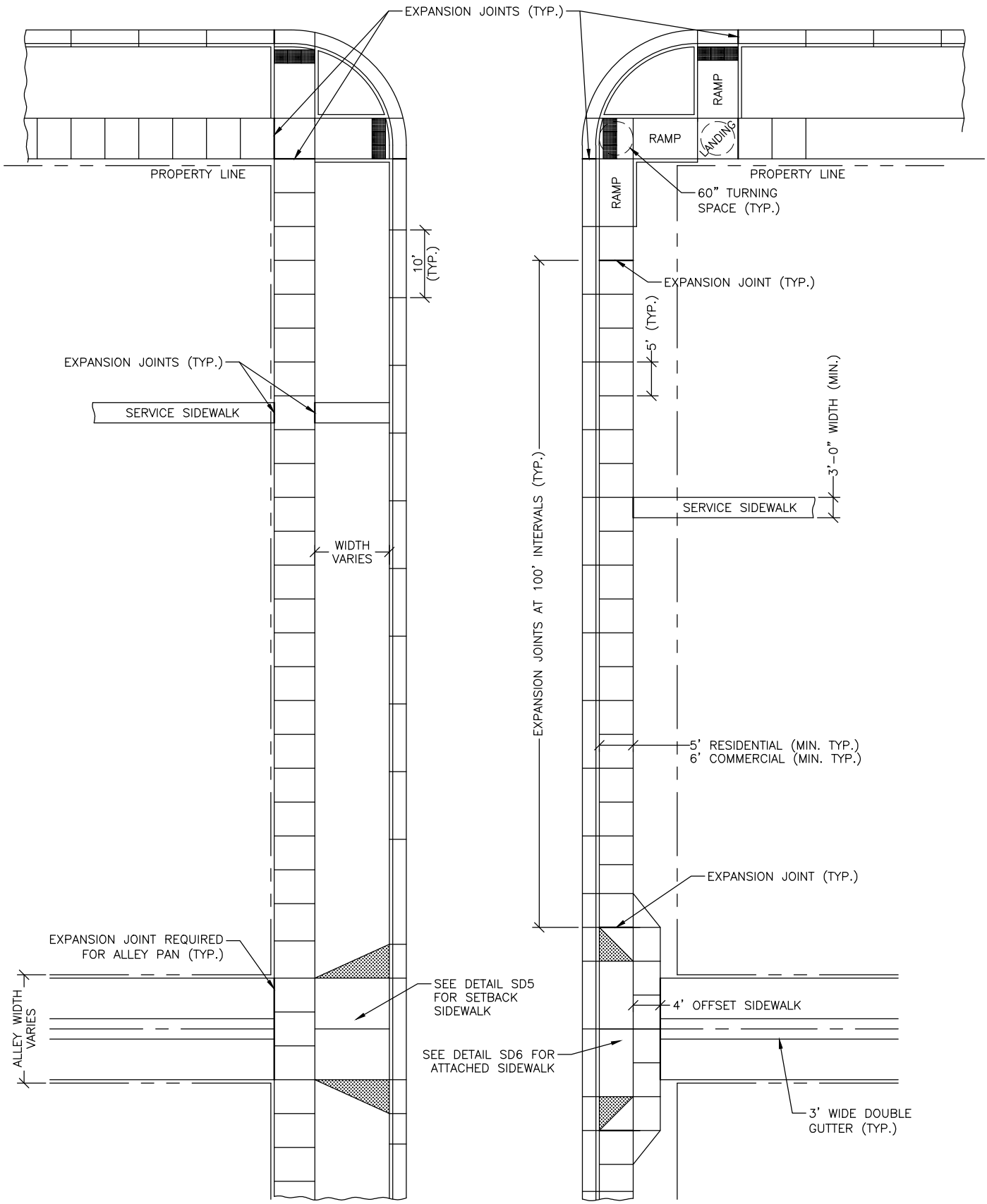

JOINT PLACEMENT AND WIDTH STANDARDS

SCALE: 1"=20'-0"

09/03/2024 01/01/2021 REVISION	city of PUEBLO colorado	**JOINT PLACEMENT & WIDTH STANDARDS FOR SIDEWALK, C&G AND ALLEYS** PUBLIC WORKS DEPARTMENT - ENGINEERING DIVISION 211 EAST "D" ST. PUEBLO, CO 81003 (719) 553-2295 PHONE	SD16 DRAWN BY: JM CHECKED BY: BQ APPROVED BY: CR

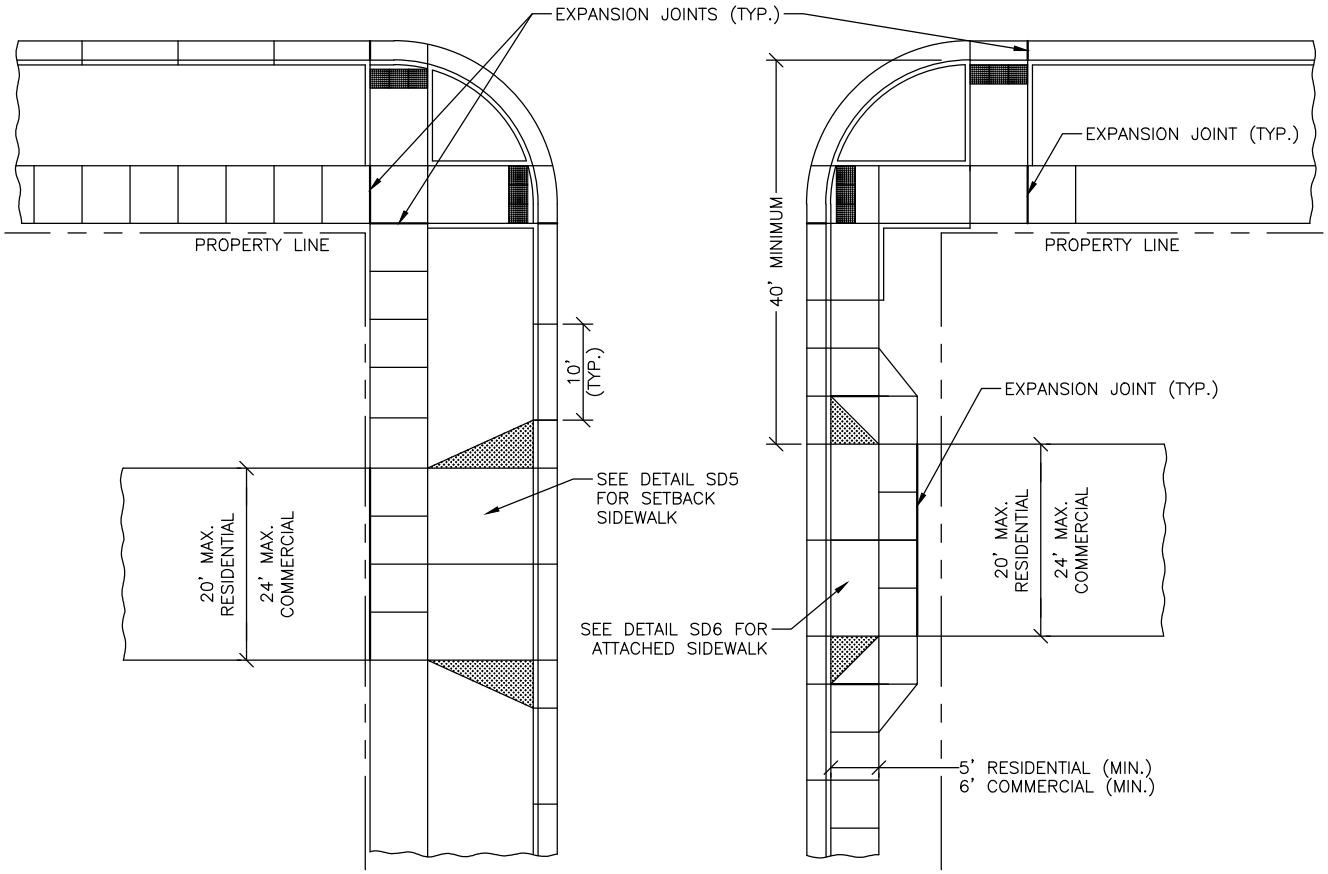

GENERAL REQUIREMENTS FOR DRIVEWAYS

SCALE: 1"=20'-0"

NOTES:

1. PORTION OF ANY SIDEWALK AT DRIVEWAY CROSSINGS OR FUTURE DRIVEWAY CROSSINGS MUST HAVE A MINIMUM CONCRETE THICKNESS OF 6". THIS APPLIES TO ALL NEW CONSTRUCTION AND REPLACEMENT OF ANY SIDEWALK.
2. DRIVEWAY WIDTHS GREATER MAXIMUM WIDTHS SHOWN ABOVE REQUIRE APPROVAL FROM THE TRAFFIC ENGINEER.

	city of PUEBLO colorado	**GENERAL REQUIREMENTS FOR DRIVEWAYS**	SD17
09/03/2024		PUBLIC WORKS DEPARTMENT - ENGINEERING DIVISION 211 EAST "D" ST. PUEBLO, CO 81003 (719) 553-2295 PHONE	DRAWN BY: JM CHECKED BY: BQ APPROVED BY: CR
01/01/2021			
REVISION			

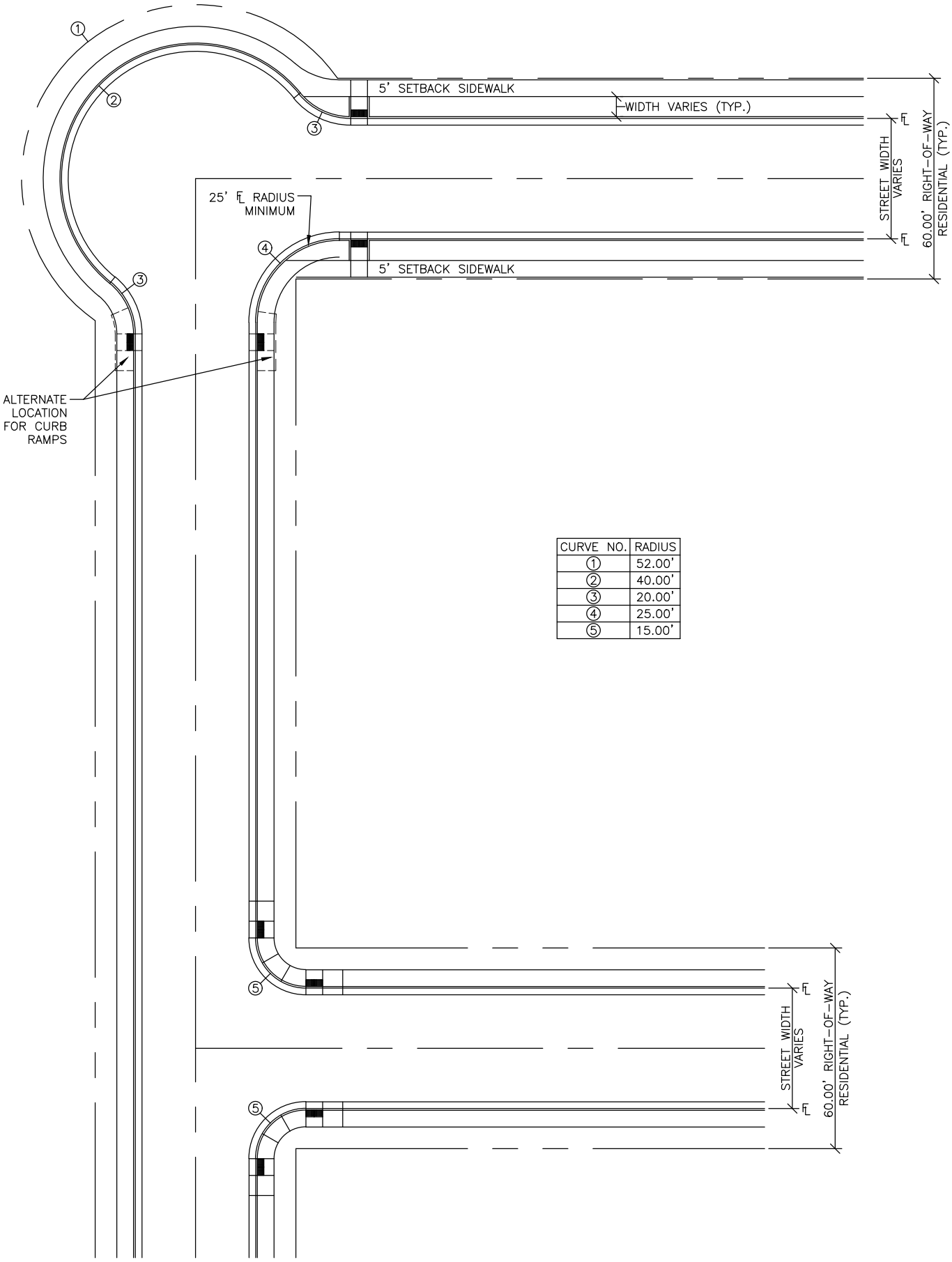

CURVE NO.	RADIUS
1	52.00'
2	40.00'
3	20.00'
4	25.00'
5	15.00'

09/03/2024	
10/17/2022	
REVISION	

city of PUEBLO colorado

KNUCKLE AND "T" INTERSECTION DETAIL

PUBLIC WORKS DEPARTMENT - ENGINEERING DIVISION
211 EAST "D" ST. PUEBLO, CO 81003
(719) 553-2295 PHONE

SD18

DRAWN BY: JM
CHECKED BY: BQ
APPROVED BY: CR

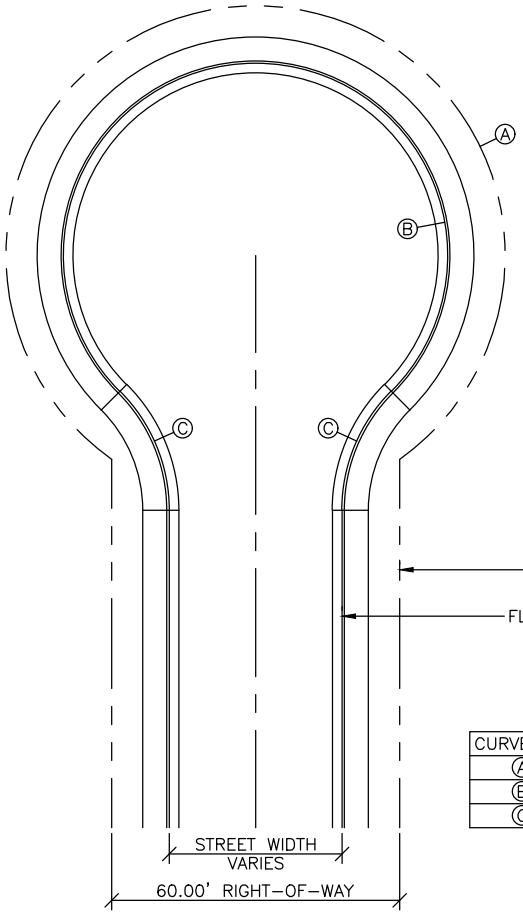

RESIDENTIAL

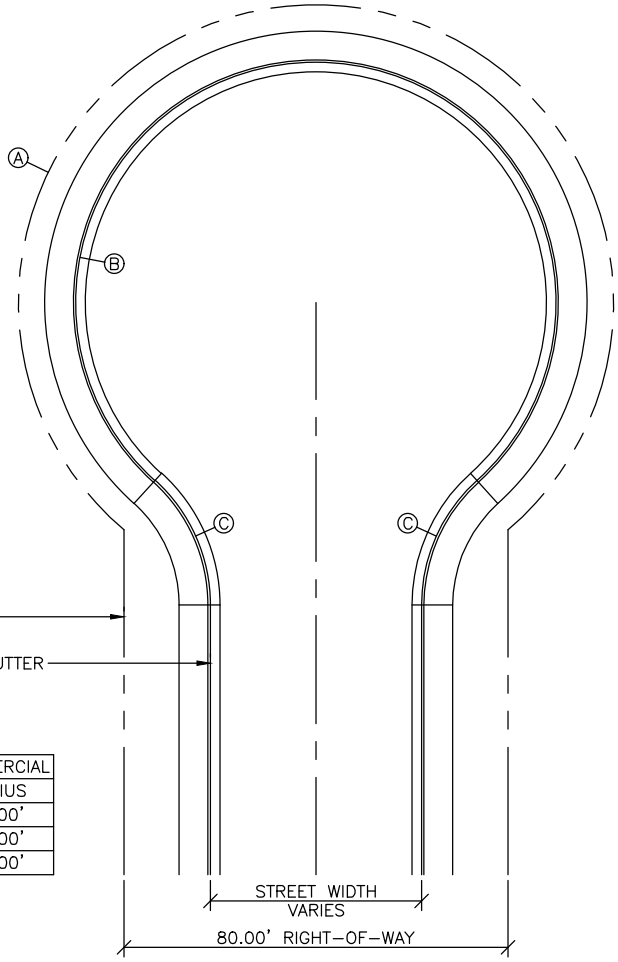

COMMERCIAL

RIGHT-OF-WAY

FLOW LINE OF CURB & GUTTER

CURVE NO.	RESIDENTIAL RADIUS	COMMERCIAL RADIUS
A	52.00'	62.00'
B	40.00'	50.00'
C	35.00'	35.00'

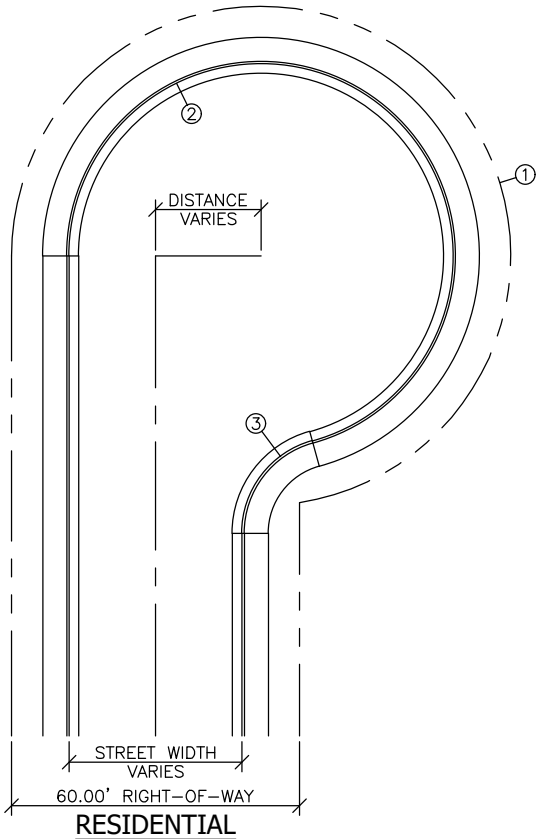

RESIDENTIAL

CURVE NO.	RESIDENTIAL RADIUS
1	52.00'
2	40.00'
3	20.00'

09/03/2024	city of PUEBLO colorado	**CUL-DE-SAC DETAIL**
10/17/2022		PUBLIC WORKS DEPARTMENT - ENGINEERING DIVISION 211 EAST "D" ST. PUEBLO, CO 81003 (719) 553-2295 PHONE
REVISION		

SD19

DRAWN BY: JM
CHECKED BY: BQ
APPROVED BY: CR

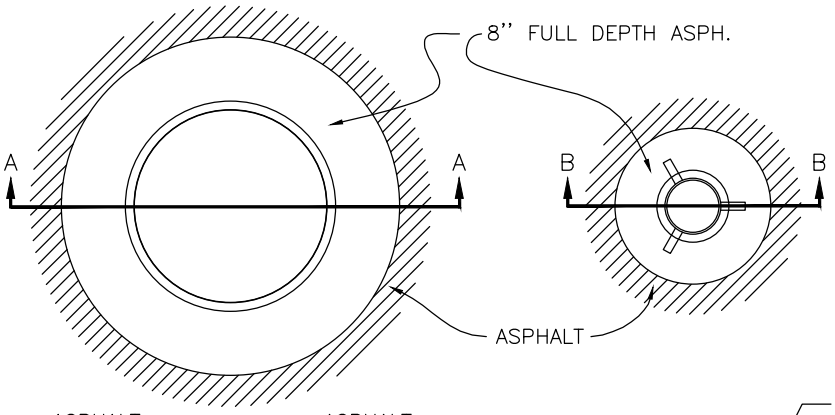

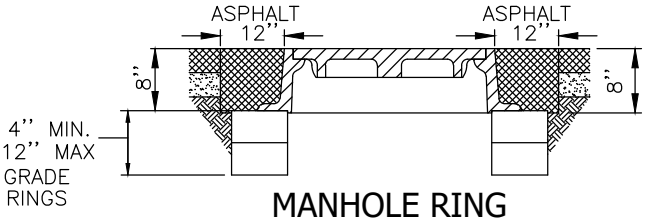

MANHOLE RING
SECTION A-A
NOT TO SCALE

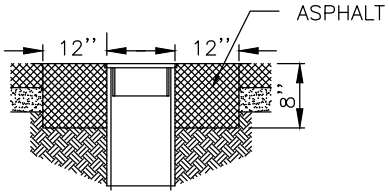

GAS VALVE BOX
SECTION B-B
NOT TO SCALE

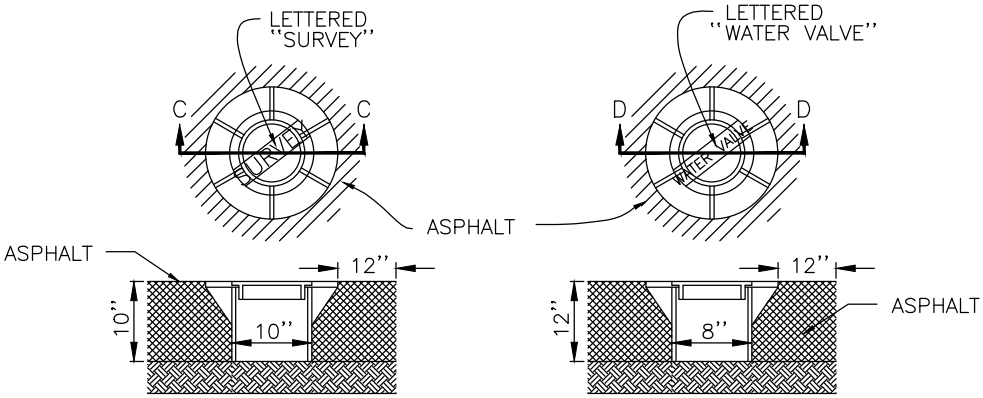

MONUMENT BOX
SECTION C-C
NOT TO SCALE

WATER VALVE BOX
SECTION D-D
NOT TO SCALE

ADJUSTMENT DETAILS

NOTES:
1. ALL RINGS TO BE SET 1/4" BELOW FINISH GRADE.

	city of PUEBLO colorado	**ADJUSTMENT DETAILS**	SD20
09/03/2024		PUBLIC WORKS DEPARTMENT - ENGINEERING DIVISION 211 EAST "D" ST. PUEBLO, CO 81003 (719) 553-2295 PHONE	DRAWN BY: JM CHECKED BY: BQ APPROVED BY: CR
10/17/2022			
REVISION			

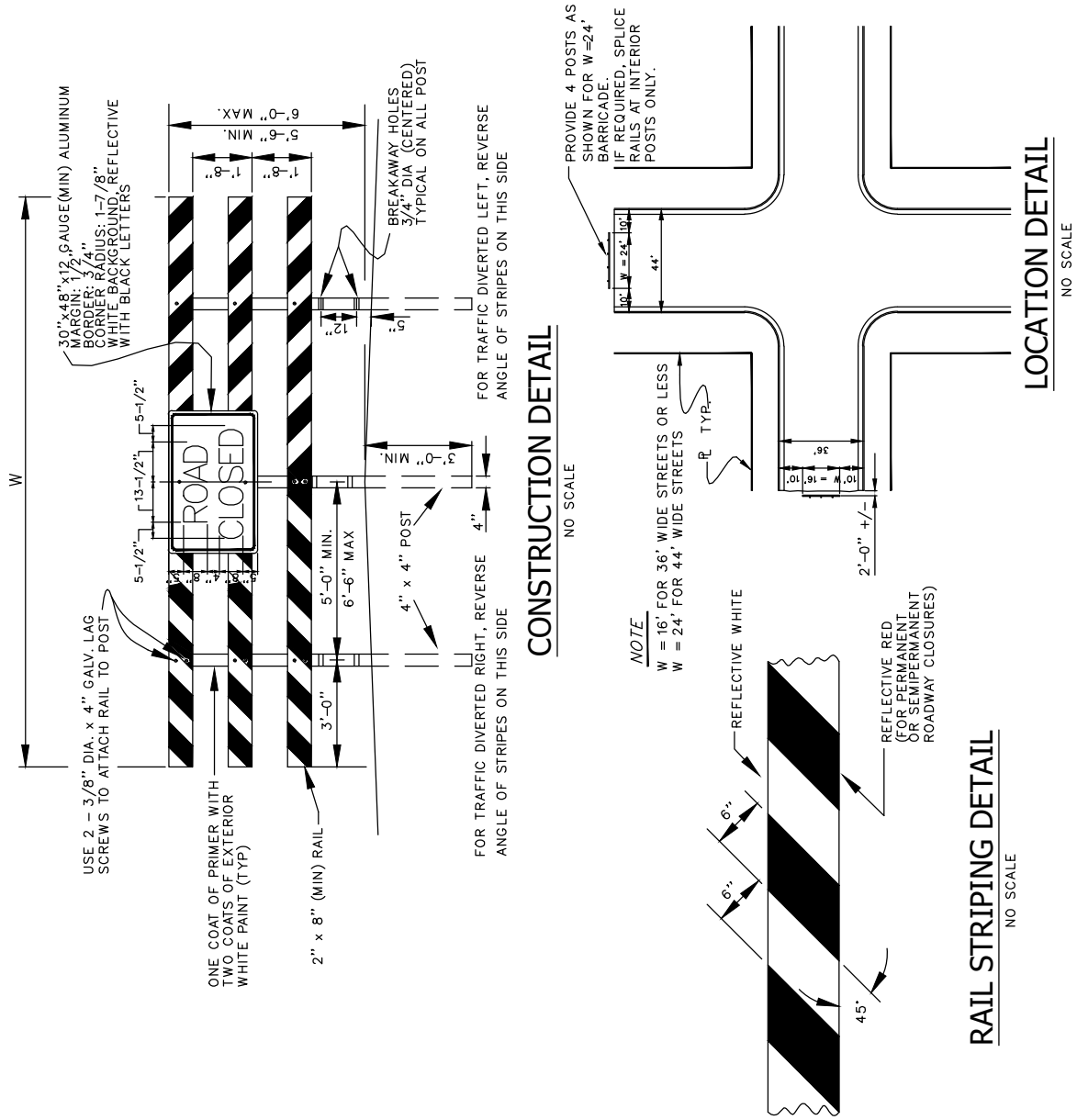

GENERAL NOTES

1. FIELD LOCATION TO BE DETERMINED BY TRAFFIC ENGINEER.
2. ALL REFLECTIVE SURFACES SHALL BE SMOOTH SURFACE TYPE REFLECTIVE SHEETING OR APPROVED EQUAL.
3. ALL TIMBER SHALL BE GRADE NO. 2 OR BETTER, (DOUGLAS FIR, LARCH OR HEM-FIR.)
4. ALL POSTS SHALL BE PRESERVATIVE TREATED IN ACCORDANCE WITH AWPB-FDN STANDARDS.
5. ATTACH "ROAD CLOSED" SIGN TO POST WITH 2-3/8" DIA. x 4" GALV. LAG SCREWS. WHERE W = 24', PLACE SIGN ON POST LOCATED ON RIGHT SIDE OF BARRICADE CENTER.
6. PAINT FOR RAILS AND POSTS SHALL BE SHERWIN WILLIAMS A-100 ALKYD EXTERIOR WOOD PRIMER A-100 ALKYD EXTERIOR WOOD PRIMER WITH A-100 LATEX HOUSE AND TRIM PAINT (SERIES A8) OR APPROVED EQUAL.

	city of PUEBLO colorado	**STANDARD TYPE III BARRICADE**	SD21
09/03/2024		PUBLIC WORKS DEPARTMENT - ENGINEERING DIVISION	DRAWN BY: JM
10/17/2022		211 EAST "D" ST. PUEBLO, CO 81003	CHECKED BY: BQ
REVISION		(719) 553-2295 PHONE	APPROVED BY: CR

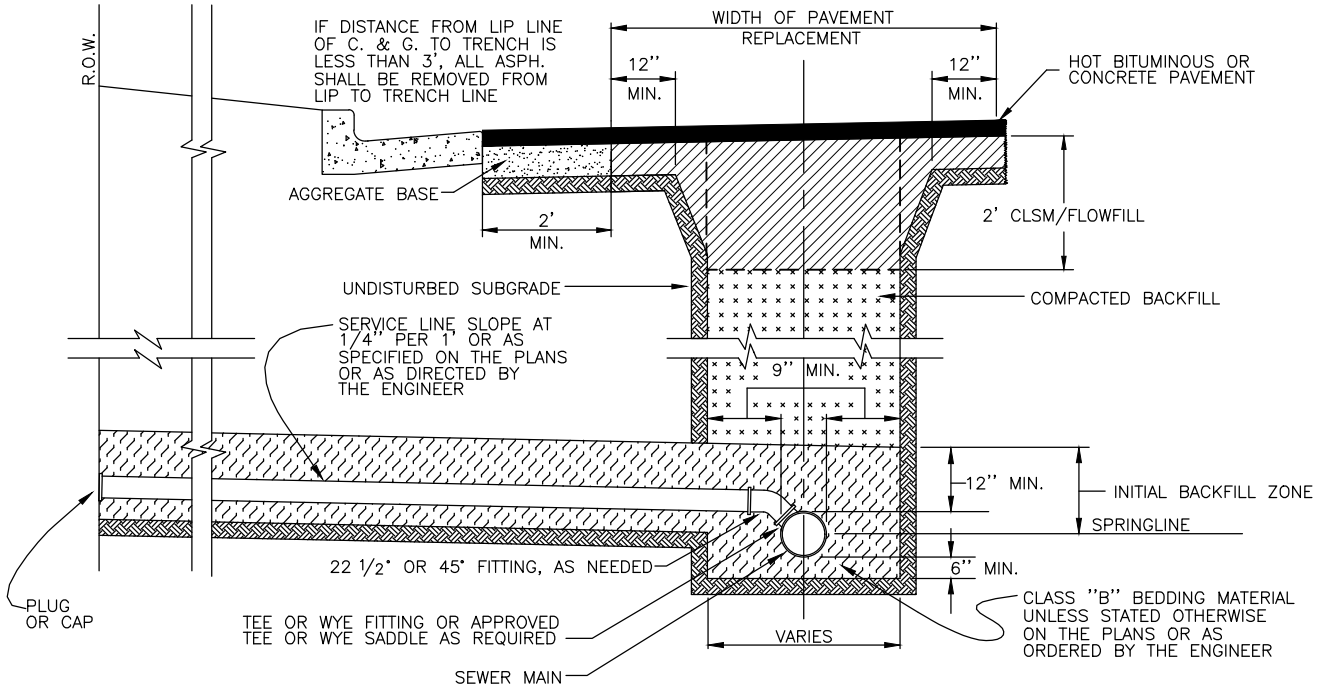

TRENCH DETAIL FOR SANITARY SEWER MAIN AND SERVICE LINES

SCALE: 1"=3'-0"

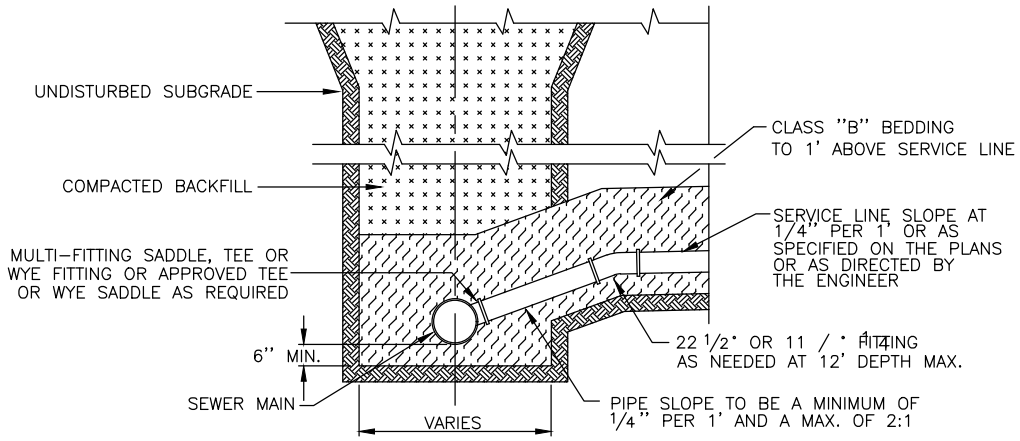

SANITARY SEWER SERVICE INSTALLATION FOR MAINS GREATER THAN 12 FEET DEEP

SCALE: 1"=3'-0"

NOTES:

1. CONTRACTOR SHALL COMPLY WITH ALL LOCAL, STATE AND FEDERAL HEALTH AND SAFETY REQUIREMENTS INCLUDING BUT NOT LIMITED TO DEPOSITION OF CUT, SLOPING AND/OR BRACING.
2. SERVICE LINES SHALL BE CONNECTED TO THE SEWER MAIN SO THE FLOWLINE IS AT/OR ABOVE THE SPRINGLINE OF THE PIPE FOR 8" AND 10" SEWER MAINS AND IN THE TOP ¼ OF THE PIPE FOR 12" AND LARGER SEWER MAINS.
3. THE ENDS OF ALL SERVICE LINES SHALL BE MARKED FOR LOCATION WITH A 2"x4" BOARD OR OTHER SUITABLE MARKER EXTENDING 2 FEET ABOVE AND 3 FEET BELOW GRADE IN ADDITION TO A 3 INCH WIDE GREEN PLASTIC TAPE TIED TO THE END OF THE SERVICE LINE AND EXTENDING 6 INCHES ABOVE THE GROUND SURFACE.

REVISION
09/03/2024
2/13/2023
10/17/2022

city of PUEBLO colorado

SANITARY SEWER TRENCH DETAIL

PUBLIC WORKS DEPARTMENT - ENGINEERING DIVISION
211 EAST "D" ST. PUEBLO, CO 81003
(719) 553-2295 PHONE

SD22

DRAWN BY: JM
CHECKED BY: SM
APPROVED BY: SM

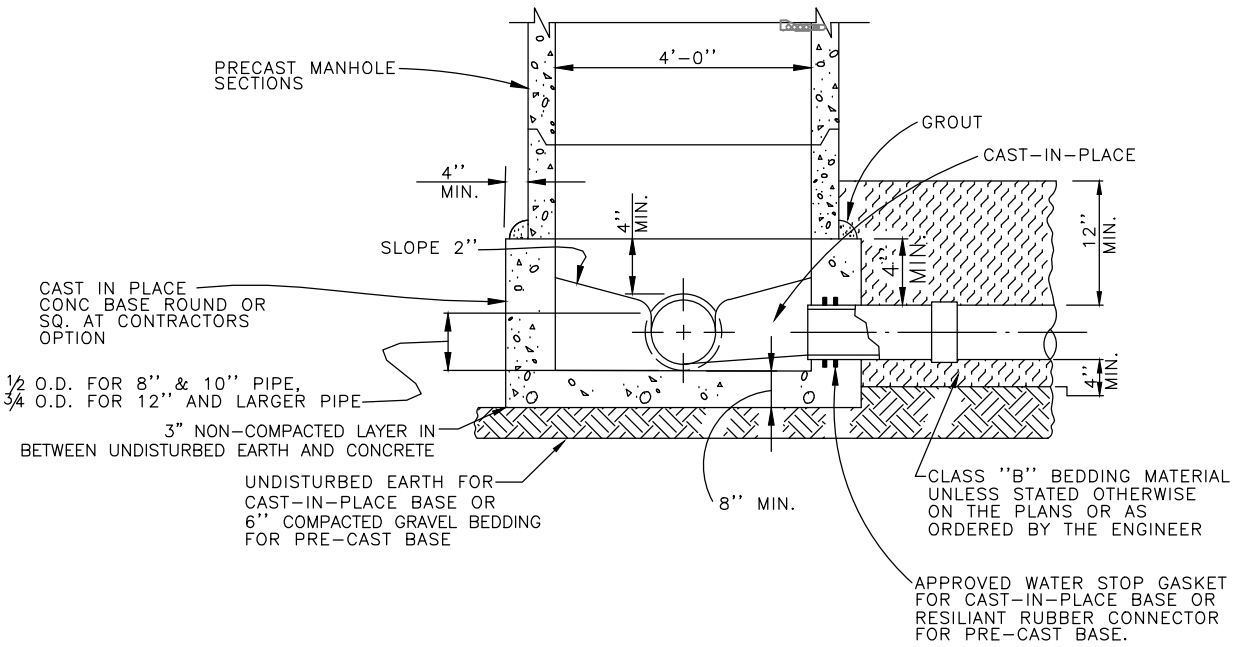

STANDARD 48" BASE SECTION 8" THRU 15" PIPE

NO SCALE

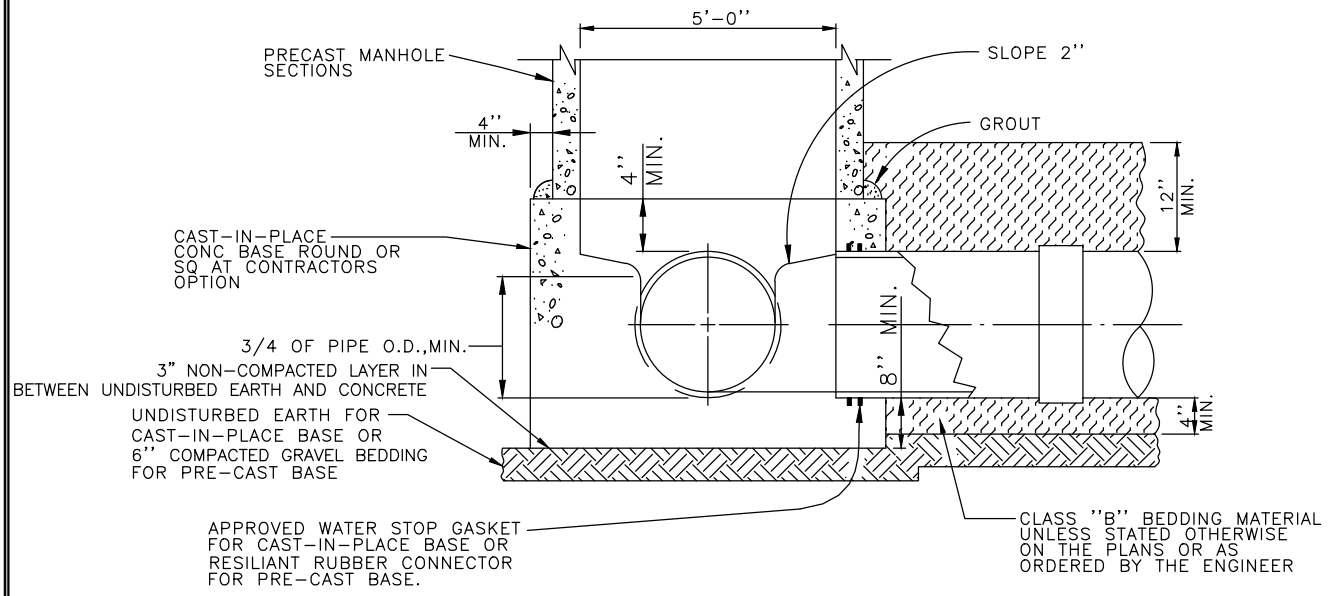

STANDARD 60" BASE SECTION 18" THRU 36" PIPE

NO SCALE

MANHOLE NOTES

1. USE 24" STANDARD MANHOLE FRAME AND COVER UNLESS OTHERWISE NOTED ON PLANS.
2. IF PRE-CAST MANHOLE BASES ARE USED, THE CONCRETE BENCH/CHANNEL SHALL BE CAST-IN-PLACE, AFTER SEWER PIPE IS SET TO GRADE
3. THE CONCRETE CHANNEL IN ALL MANHOLE BASES SHALL BE CAST WITH A MINIMUM 18'' CENTERLINE RADIUS SWEEP.
4. FOR 72" STANDARD BASE SECTION 42" THRU 48" SEE SD15.
5. MANHOLES FOR PIPES GREATER THAN 48" SHALL BE DESIGNED BY ENGINEER.

	city of PUEBLO colorado	**SANITARY SEWER MANHOLE DETAILS**	SD23
2/13/2023		PUBLIC WORKS DEPARTMENT - ENGINEERING DIVISION 211 EAST "D" ST. PUEBLO, CO 81003 (719) 553-2295 PHONE	DRAWN BY: JM CHECKED BY: SM APPROVED BY: SM
10/17/2022			
REVISION			

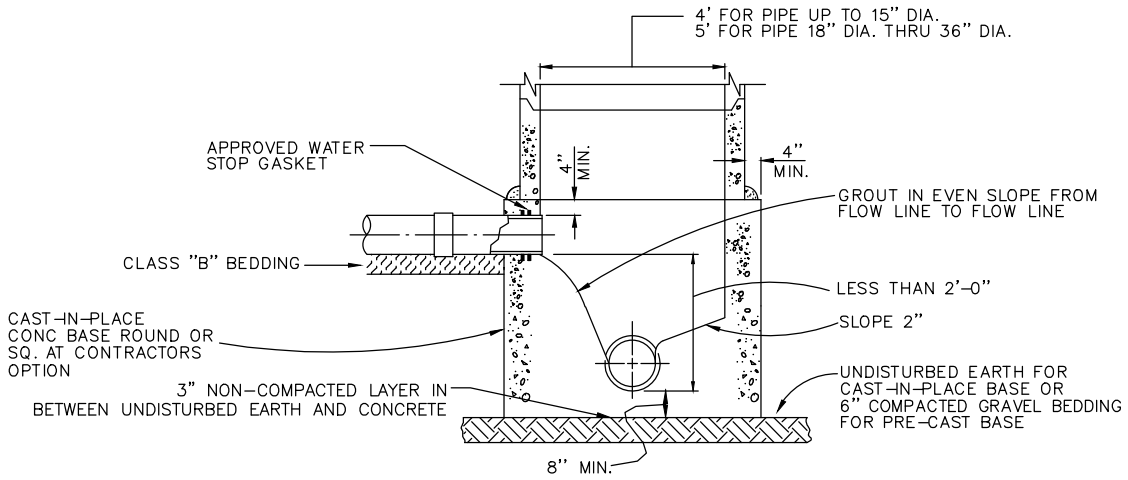

MANHOLE BASE SECTION FOR PIPE DROP LESS THAN 2'-0"

NOT TO SCALE

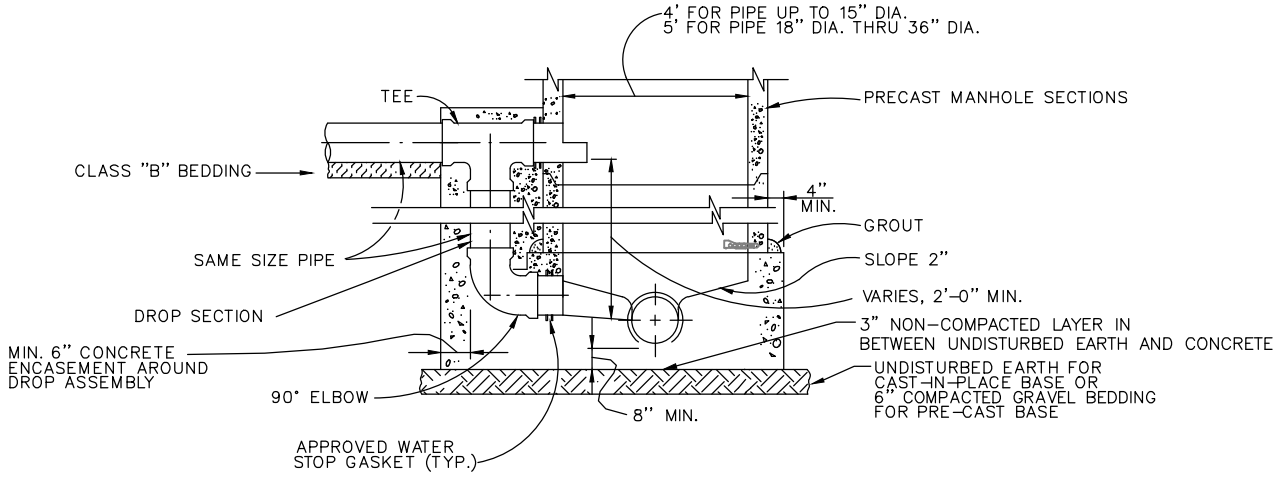

MANHOLE BASE SECTION WITH DROP ASSEMBLY

NOT TO SCALE

	city of PUEBLO colorado	**SANITARY SEWER MANHOLE DETAILS**	SD24
2/13/2023		PUBLIC WORKS DEPARTMENT - ENGINEERING DIVISION 211 EAST "D" ST. PUEBLO, CO 81003 (719) 553-2295 PHONE	DRAWN BY: JM CHECKED BY: SM APPROVED BY: SM
10/17/2022			
REVISION			

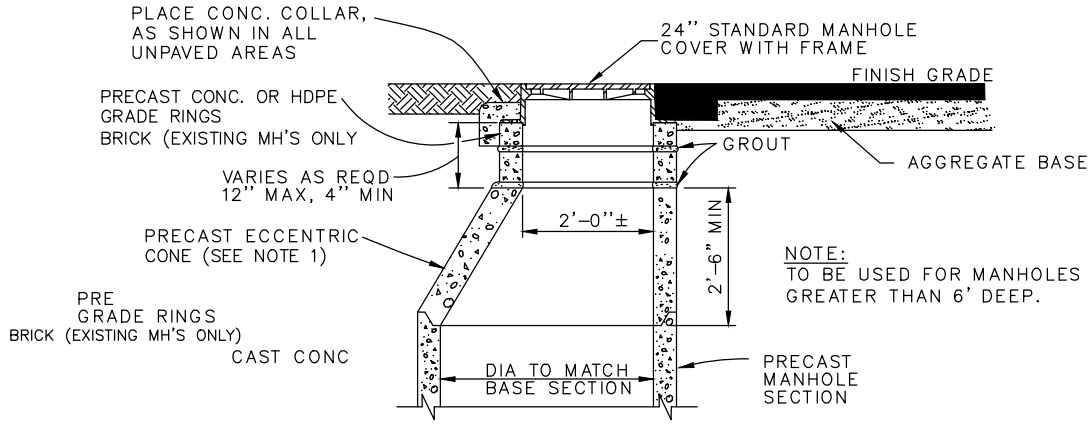

MANHOLE TOP SECTION WITH RING EXTENSION

SCALE: 1"-3'-0"

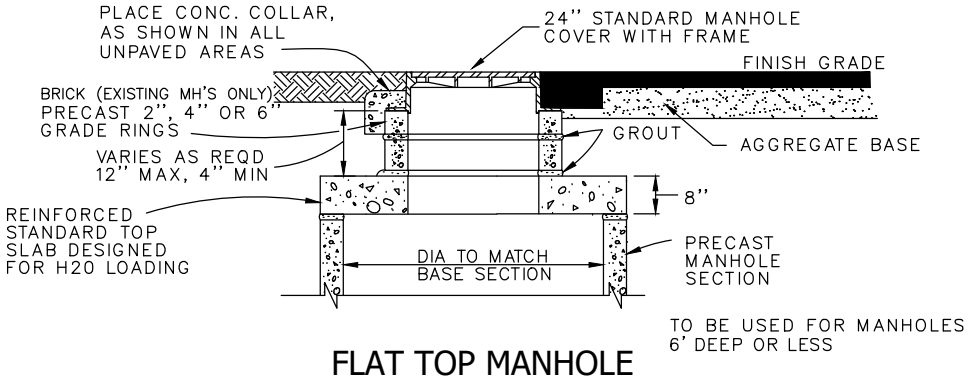

FLAT TOP MANHOLE

SCALE: 1"-3'-0"

NOTE 1. "SITUATE ECCENTRIC CONE SECTION WHERE SLOPE OF THE CONE SECTION IS POINTING TOWARD THE DOWNSTREAM DIRECTION"

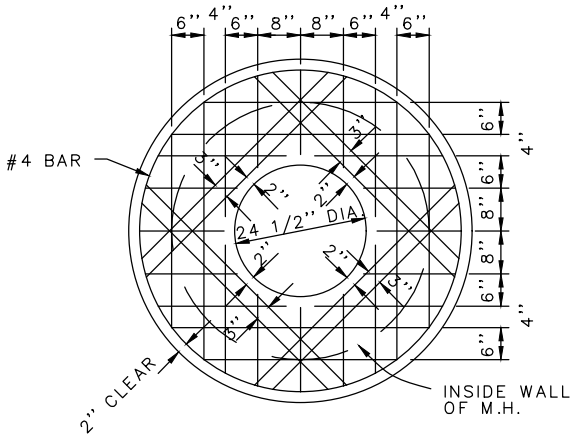

1. DESIGNED FOR H20 LOADING
2. BARS TO BE TIED, NOT WELDED.
3. SLAB TO BE 8'' THICK.
4. STEEL TO BE PLACED TOP & BOTTOM WITH 2'' CLEAR BTWN. BARS & CONC. SURFACE.
5. ALL BARS TO BE #4.

TOP CONCRETE SLAB FOR FLAT TOP MANHOLE

NOT TO SCALE

2/13/2023	city of PUEBLO colorado	**SANITARY SEWER MANHOLE DETAILS**	SD25
10/17/2022		PUBLIC WORKS DEPARTMENT - ENGINEERING DIVISION 211 EAST "D" ST. PUEBLO, CO 81003 (719) 553-2295 PHONE	DRAWN BY: JM CHECKED BY: SM APPROVED BY: SM
REVISION			

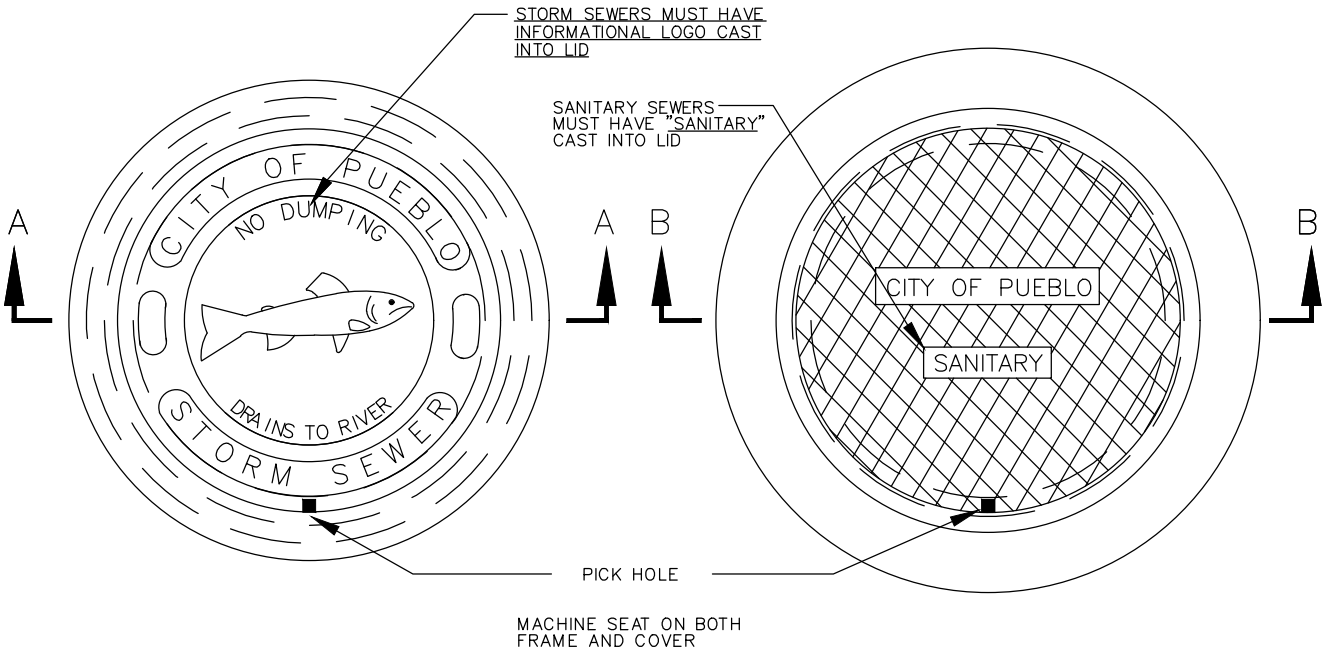

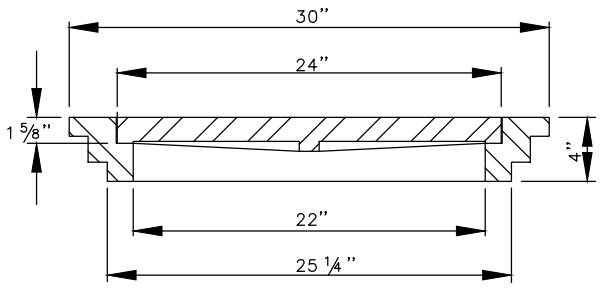

SECTION A-A
STANDARD MANHOLE RING AND COVER
INLET NEENAH R-6041, DEETER 1157,
EAST JORDAN IRONWORKS 2855
OR APPROVED EQUAL

SCALE 1"=1'-0"

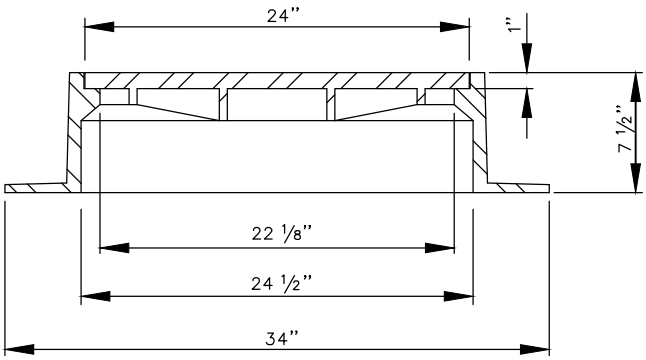

SECTION B-B
STANDARD MANHOLE RING AND COVER
INLET NEENAH R-1706, DEETER 1258,
EAST JORDAN IRONWORKS 2430
OR APPROVED EQUAL

SCALE 1"=1'-0"

MANHOLE NOTES

1. USE 24" STANDARD MANHOLE FRAME AND COVER UNLESS OTHERWISE NOTED ON PLANS.
2. PROVIDE 'BOLT DOWN' COVERS FOR MANHOLE IN IN REMOTE UNIMPROVED AREAS.

10/17/2022 REVISION	city of PUEBLO colorado	**MANHOLE AND INLET RING & COVER DETAILS** PUBLIC WORKS DEPARTMENT - ENGINEERING DIVISION 211 EAST "D" ST. PUEBLO, CO 81003 (719) 553-2295 PHONE	SD26 DRAWN BY: JM CHECKED BY: BQ APPROVED BY: CR

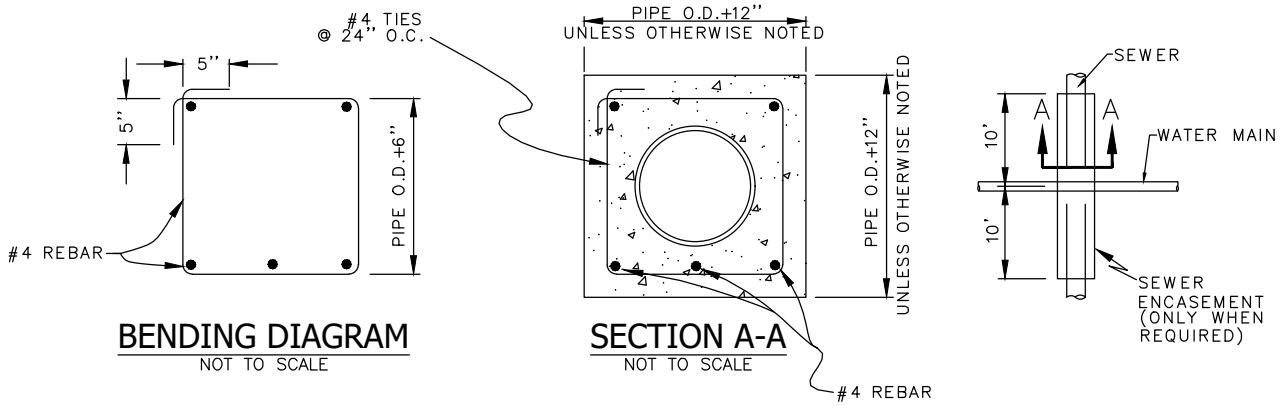

BENDING DIAGRAM
NOT TO SCALE

SECTION A-A
NOT TO SCALE

SEWER ENCASEMENT DETAILS
NOT TO SCALE

	city of PUEBLO colorado	**SANITARY SEWER ENCASEMENT DETAILS**	SD27
09/03/2024		PUBLIC WORKS DEPARTMENT - ENGINEERING DIVISION 211 EAST "D" ST. PUEBLO, CO 81003 (719) 553-2295 PHONE	DRAWN BY: JM CHECKED BY: SM APPROVED BY: SM
2/13/2023			
10/17/2022			
REVISION			

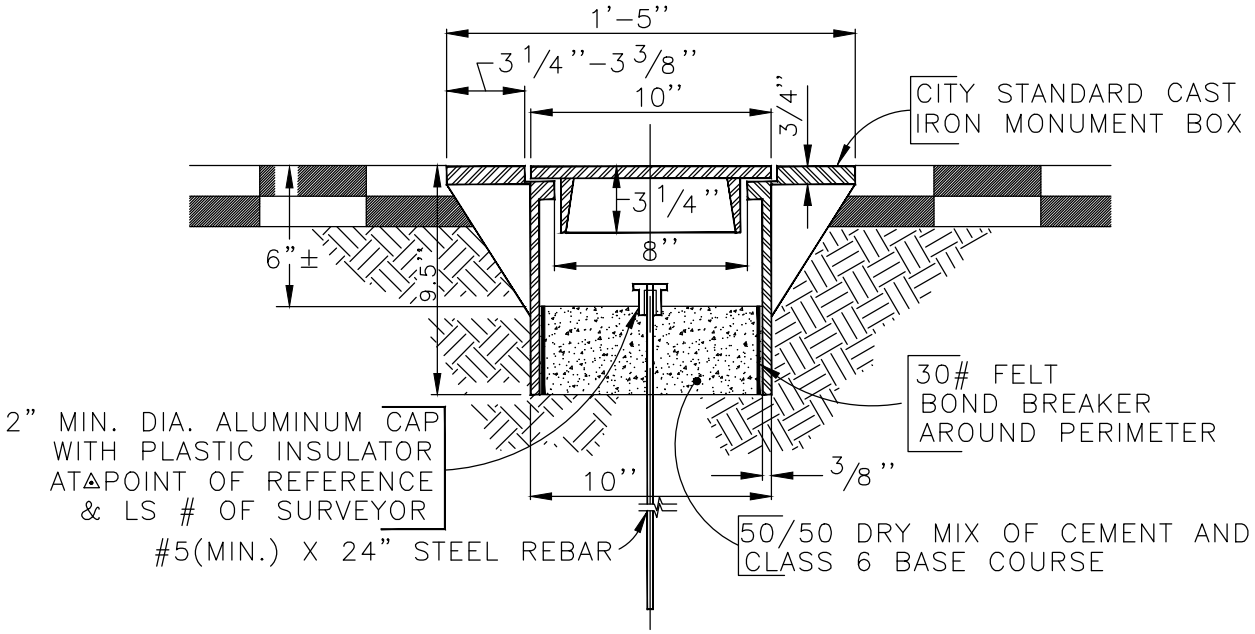

RIGHT-OF-WAY MONUMENTATION STANDARD

NOT TO SCALE

10/17/2022 REVISION	city of PUEBLO colorado	**RIGHT-OF-WAY MONUMENTATION STANDARD** PUBLIC WORKS DEPARTMENT - ENGINEERING DIVISION 211 EAST "D" ST. PUEBLO, CO 81003 (719) 553-2295 PHONE	SD28 DRAWN BY: JM CHECKED BY: BQ APPROVED BY: CR

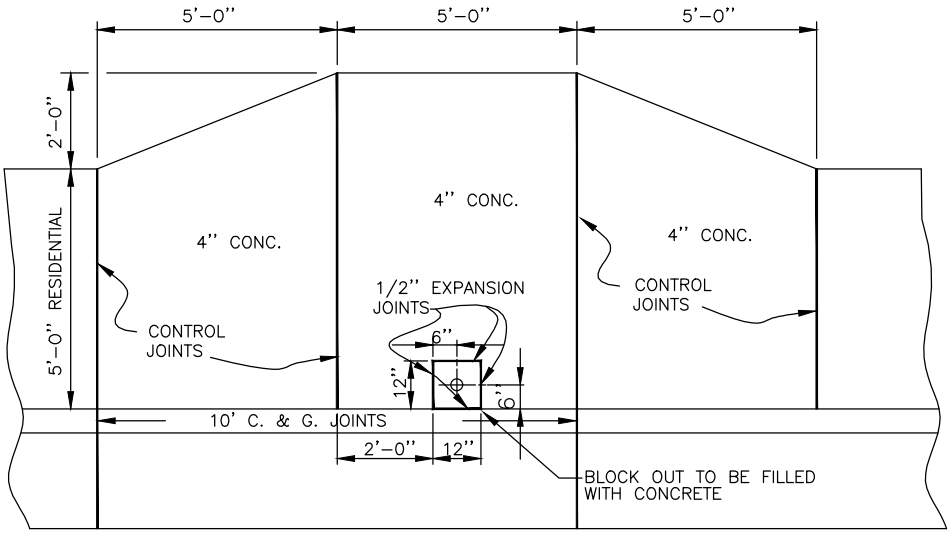

SCALE: 1" = 4'

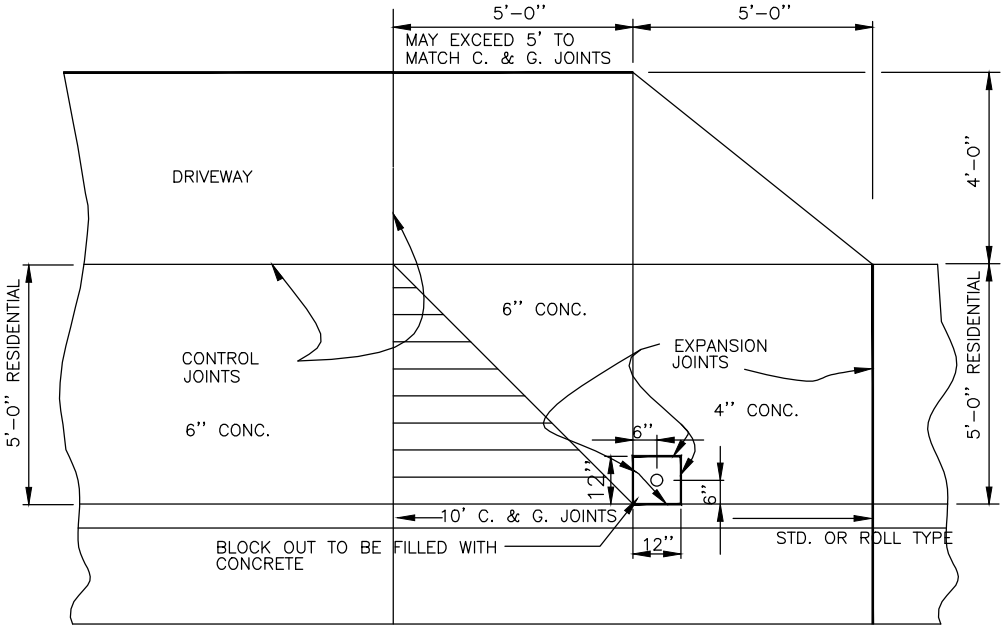

SCALE: 1" = 4'

NOTE:
FOR MAIL BOXES LARGER THAN DIMENSIONS SHOWN, DETAIL SHALL BE MODIFIED TO PROVIDE A MINIMUM 3'-6" CLEARANCE TO EDGE OF WALK

10/17/2022 REVISION	city of PUEBLO colorado	**CURB SIDE MAIL BOXES**	SD29
		PUBLIC WORKS DEPARTMENT - ENGINEERING DIVISION 211 EAST "D" ST. PUEBLO, CO 81003 (719) 553-2295 PHONE	DRAWN BY: JM CHECKED BY: BQ APPROVED BY: CR

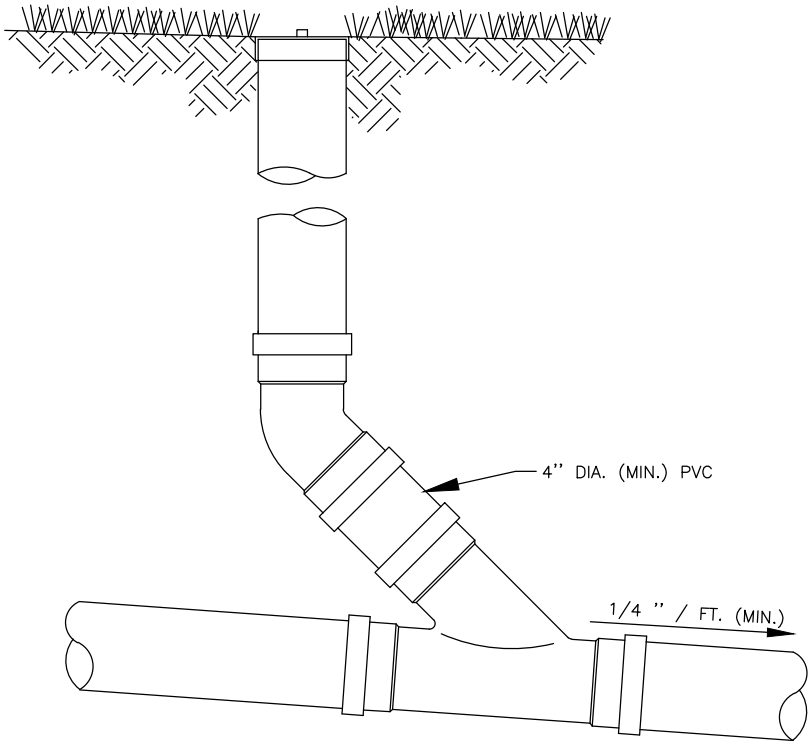

TYPICAL CLEANOUT DETAIL

NOT TO SCALE

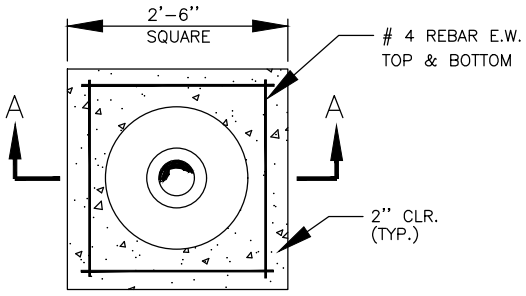

COVER DETAIL

NOT TO SCALE

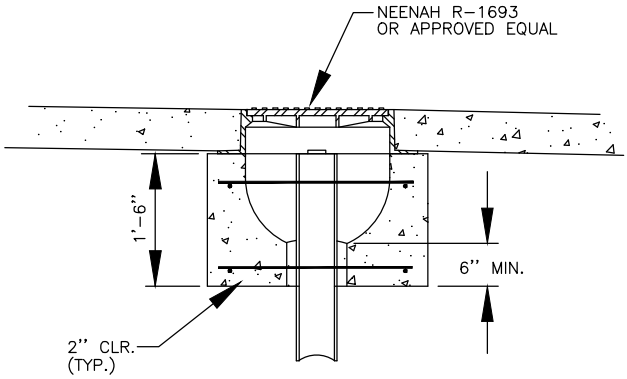

SECTION A-A

NOT TO SCALE

NOTE:

WHEN CLEANOUT IS IN STREET, PARKING OR ANY DRIVEWAY, CONSTRUCT COVER AS SHOWN

10/17/2022 REVISION	city of PUEBLO colorado	**SANITARY SEWER MAIN CLEANOUT**	SD30
		PUBLIC WORKS DEPARTMENT - ENGINEERING DIVISION 211 EAST "D" ST. PUEBLO, CO 81003 (719) 553-2295 PHONE	DRAWN BY: JM CHECKED BY: BQ APPROVED BY: CR

Materials

General

The work covered by this section of the specifications consists of the furnishing of all labor, supplies, equipment and materials and performing all operations in connection with the installation of tracer wire and appurtenances, as shown on the plans, as herein specified and directed by the Engineer to comply with Senate Bill 18-167. The bill requires that all new underground facilities, including laterals up to the structure or building being served, installed on or after August 8, 2018, must be electronically locatable when installed per section 9-1.5-103(10), C.R.S.
All tracer wire and tracer wire products shall be domestically manufactured in the U.S.A.
All tracer wire shall have HDPE insulation intended for direct bury, color coated per APWA standard for the specific utility being marked.

Tracer Wire

- **Open Trench** - Tracer wire shall be #12 AWG copper clad steel, high strength with minimum 450 lb. break load, with minimum 30 mil HDPE insulation thickness.
- **Directional Drilling/Boring** - Tracer wire shall be #12 AWG copper clad steel, extra high strength with minimum 1,150 lb. break load, with minimum 30 mil HDPE insulation thickness.
- **Tracer wire - Pipe Bursting/Slip Lining** - Tracer wire shall be 7 x 7 stranded copper clad steel, extreme strength with 4,700 lb. break load, with minimum 50 ml HDPE insulation thickness.

Connectors

- All mainline tracer wires must be interconnected in intersections, at mainline tees and mainline crosses. At tees, the three wires shall be joined using a single 3-way lockable connector (SnakeBite™ or approved equal). At crosses, the four wires shall be joined using a 4-way connector. Use of two 3-way connectors with a short jumper wire between them is an acceptable alternative.
- **Direct bury wire connectors** - Shall include SnakeBite™ 3-way lockable connectors (or approved equal) and mainline to lateral lug connectors specifically manufactured for use in underground tracer wire installation. Connectors shall be dielectric silicon filled to seal out moisture and corrosion and shall be installed in a manner so as to prevent any uninsulated wire exposure.
- Non-locking friction fit, twist on or taped connectors are prohibited.

Termination/Access

- All tracer wire termination points must utilize an approved tracer wire access box (above ground access box or grade level/in-ground access box as applicable), specifically manufactured for this purpose.
- All grade level/in-ground access boxes shall include a dual terminal switchable lid (SnakePit® LD14G2T-SW or approved equal), be appropriately identified with “sewer” cast into the cap, and color coded per APWA standard for the specific utility being marked.
- A minimum of 2 ft. of excess/slack wire is required in all tracer wire access boxes after meeting final elevation.
- All tracer wire access boxes must include a manually interruptible conductive/connective link between the terminal(s) for the tracer wire connection and the terminal for the ground rod wire connection.
- Ground wire shall be connected to the identified (or bottom) terminal on all access boxes.
- **Service Laterals on public property** - Tracer wire must terminate with a coil of 6 feet of tracer wire for future extension to the building, located at the edge of the road right-of-way, and out of the roadway.
- **Service Laterals on private property** - Tracer wire must terminate at an approved above-ground tracer wire access box, affixed to the building exterior directly above where the utility enters the building, at an elevation not greater than 5 vertical feet above finished grade, or terminate at an approved grade level/in-ground tracer wire access box, located within 2 linear feet of the building being served by the utility.
- **Long-runs, in excess of 2,500 linear feet** - Tracer wire access must be provided utilizing an approved grade level/in-ground tracer wire access box, located at the edge of the road right-of-way and out of the roadway. The grade level/in-ground tracer wire access box shall be delineated using a minimum 48” polyethylene marker post, color coded per APWA standard for the specific utility being marked or other approved marker by the City of Pueblo.

Grounding

- Tracer wire must be properly grounded at all dead ends/stubs.
- Grounding of tracer wire shall be achieved by use of a drive-in magnesium ground rod with a minimum of 20ft of #12 red HDPE insulated copper clad steel wire connected to anode (minimum 1.5 lb.) specifically manufactured for this purpose and buried at the same elevation as the utility.
- When grounding the tracer wire at dead ends/stubs, the ground rod shall be installed in a direction 180 degrees opposite of the tracer wire, at the maximum possible distance.
- When grounding the tracer wire in areas where the tracer wire is continuous and neither the mainline tracer wire or the ground rod wire will be terminated at/above grade, install ground rod wire directly beneath and in-line with the tracer wire. Do not coil excess wire from ground rod wire. In this installation method, the ground rod wire shall be trimmed to an appropriate length before connecting to tracer wire with a mainline to lateral lug connector.
- Where the ground rod wire will be connected to a tracer wire access box, a minimum of 2 ft. of excess/slack wire is required after meeting final elevation.

Installation

General

- Tracer wire installation shall be performed in such a manner that allows proper access for connection of line tracing equipment, proper locating of wire without loss or deterioration of low frequency (512Hz) signal for distances in excess of 1,000 linear feet, and without distortion of signal caused by multiple wires being installed in close proximity to one another.
- Tracer wire systems must be installed as a single continuous wire, except where using approved connectors. No looping or coiling of wire is allowed.
- Any damage occurring during installation of the tracer wire must be immediately repaired by removing the damaged wire and installing a new section of wire with approved connectors. Taping and/or spray coating shall not be allowed.
- Tracer wire shall be installed at the top of the pipe and secured (taped/tied) at 5' intervals.
- Tracer wire must be properly grounded as specified.
- Tracer wire on all service laterals/stubs must terminate at an approved tracer wire access box located directly above the utility, at the edge of the road right-of-way but out of the roadway. (See Tracer wire **Termination/Access**)
- At all mainline dead-ends, tracer wire shall go to ground using an approved connection to a drive-in magnesium ground rod, buried at the same depth as the tracer wire. (See **Grounding**)
- Mainline tracer wire shall not be connected to existing conductive pipes. Treat as a mainline dead-end and ground using an approved waterproof connection to a ground rod buried at the same depth as the tracer wire.
- All service lateral tracer wires shall be a single wire, connected to the mainline tracer wire using an approved mainline to lateral lug connector, installed without cutting/splicing the mainline tracer wire.
- In occurrences where an existing tracer wire is encountered on an existing utility that is being extended or tied into, the new tracer wire and existing tracer wire shall be connected using approved splice connectors and shall be properly grounded at the splice location as specified.

Storm & Sanitary Sewer Systems

- All service lateral tracer wires must be properly connected to the mainline tracer wire to ensure full tracing/locating capabilities from a single connection point.
- Lay mainline tracer wire continuously, by-passing around the outside of manholes/structures on the north or east side.
- Tracer wire on all sewer laterals must terminate at the property line with a coil of 6 feet of tracer wire taped directly to the service lateral at the edge of the road right-of-way or at an approved location.
- The City of Pueblo Stormwater Department or Wastewater Department must be contacted to inspect tracer wire installation prior to backfilling any infrastructure that connects to the City's storm sewer or sanitary sewer system.

Prohibited Products and Methods

The following products and methods shall not be allowed or acceptable:

- Uninsulated tracer wire
- Tracer wire insulations other than HDPE
- Tracer wires not domestically manufactured
- Non-locking, friction fit, twist on or taped connectors
- Brass or copper ground rods
- Wire connections utilizing taping or spray-on waterproofing
- Looped wire or continuous wire installations, that has multiple wires laid side-by-side or in close proximity to one another
- Tracer wire wrapped around the corresponding utility
- Brass fittings with tracer wire connection lugs
- Wire terminations within the roadway, i.e. in valve boxes, cleanouts, manholes, etc.
- Connecting tracer wire to any conductive utilities

Testing

- All new tracer wire installations shall be located using typical low frequency (512Hz) line tracing equipment, witnessed by the contractor, engineer and facility owner as applicable, prior to acceptance of ownership.
- This verification shall be performed upon completion of rough grading and again prior to final acceptance of the project.
- Continuity testing in lieu of actual line tracing shall not be accepted.

Products

The following products have been deemed acceptable and appropriate. These products are a guide only to help you choose the correct applications for your tracer wire project.

- **Copper-Clad Steel (CCS) Tracer Wire**
  - **Open Trench** - Copperhead® #12 High Strength part # 1230G-HS or approved equal.
  - **Directional Drilling/Boring** - Copperhead® Extra High Strength part # 1245G-EHS or approved equal.
  - **Pipe Bursting/Slip Lining** - Copperhead® SoloShot Extreme Strength 7 x 7 Stranded part # GPBX- 50 or approved equal.

- **Connectors**
  - Copperhead® 3-way locking connector part # LSC1230C or approved equal.
  - DryConn 3-way Direct Bury Lug: Copperhead® Part # 3WB-01 or approved equal.

- **Termination/Access**
  - **Non-Roadway access boxes applications**: Tracer wire access boxes grade level Copperhead® 3-way Direct Bury Lug adjustable lite duty Part # LD14G2T-SW or approved equal.
  - **Concrete / Driveway access box applications**: Tracer wire access boxes grade level Copperhead® Part # CD14G2T-SW or approved equal.

- **Grounding**
  - **Drive in Magnesium Ground Rod**: Copperhead® Part # ANO-12 (1.5 lb.) or approved equal.

Manufacturer Product Options:

Copperhead® products or approved equal.

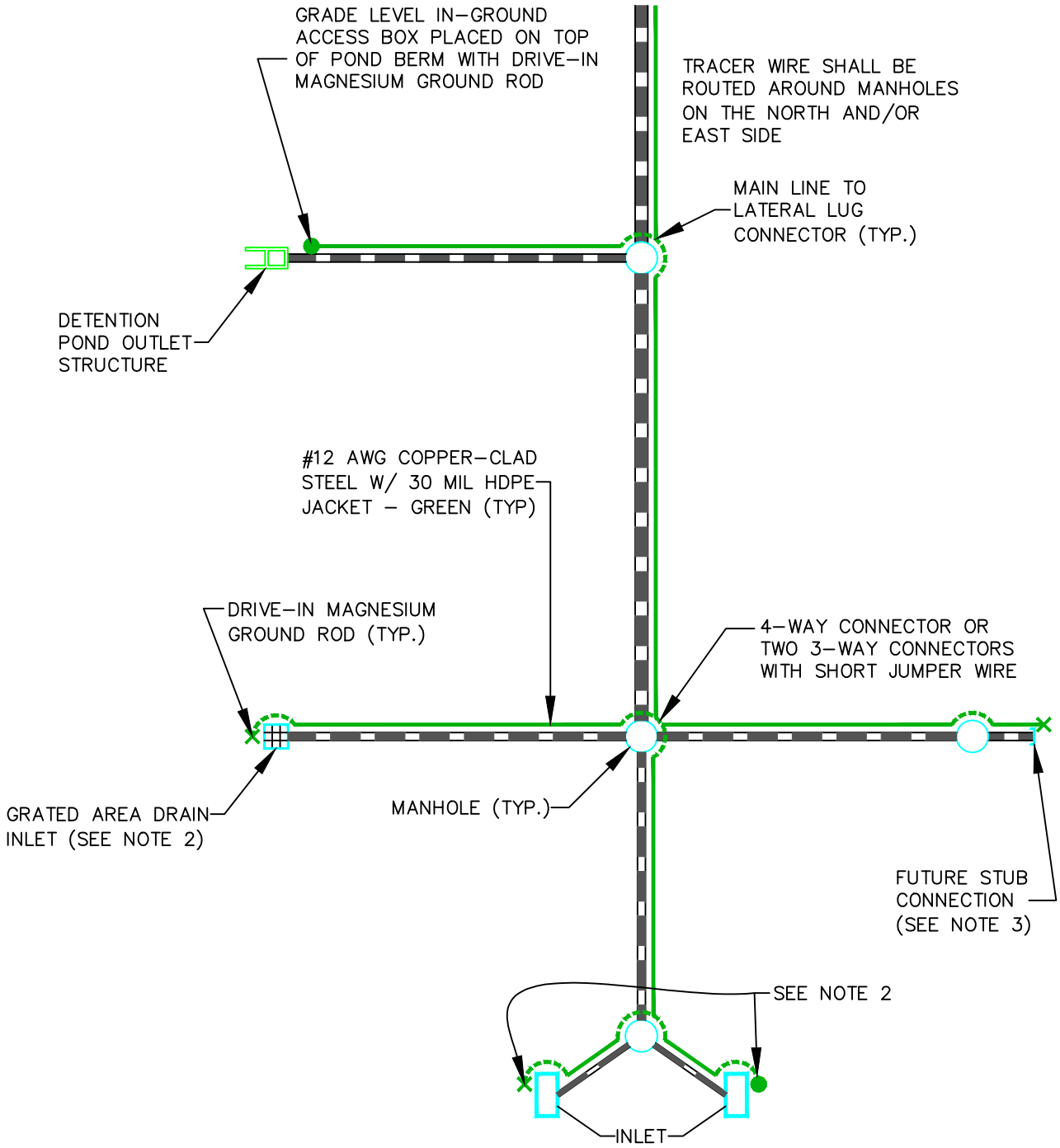

NOTES:

1. WIRE SHOWN AWAY FROM PIPE FOR CLARITY. WIRE SHALL BE INSTALLED ON THE TOP OF THE PIPE. THE WIRE SHALL BE FASTENED TO THE PIPE WITH TAPE OR PLASTIC TIES AT 5' INTERVALS.

2. TRACER WIRE FOR INLETS MAY TERMINATE INSIDE OF INLET BOX BELOW THE ACCESS (SEE DETAIL SHEET 6 OF 8) OR A GRADE LEVEL IN-GROUND ACCESS BOX MUST BE USED (OPTION REQUIRES CITY APPROVAL IN PAVED AREAS). DRIVE-IN MAGNESIUM GROUND ROD MUST BE USED FOR EITHER OPTION.

3. AT ALL FUTURE STUB CONNECTIONS, A MINIMUM OF 6 FEET OF TRACER WIRE SHALL BE EXTENDED BEYOND THE END OF THE PIPE, COILED AND SECURED FOR FUTURE CONNECTIONS. THE END OF THE TRACER WIRE SHALL BE SPLICED TO THE WIRE OF A DRIVE-IN MAGNESIUM GROUND ROD AND IS TO BE BURIED AT THE SAME ELEVATIONS AS THE SEWER MAIN.

REVISION	city of PUEBLO colorado	**TRACER WIRE SAMPLE PLAN** **STORM SEWER** PUBLIC WORKS DEPARTMENT - ENGINEERING DIVISION 211 EAST "D" ST. PUEBLO, CO 81003 (719) 553-2295 PHONE	SD34 DRAWN BY: JH CHECKED BY: SM APPROVED BY: JH

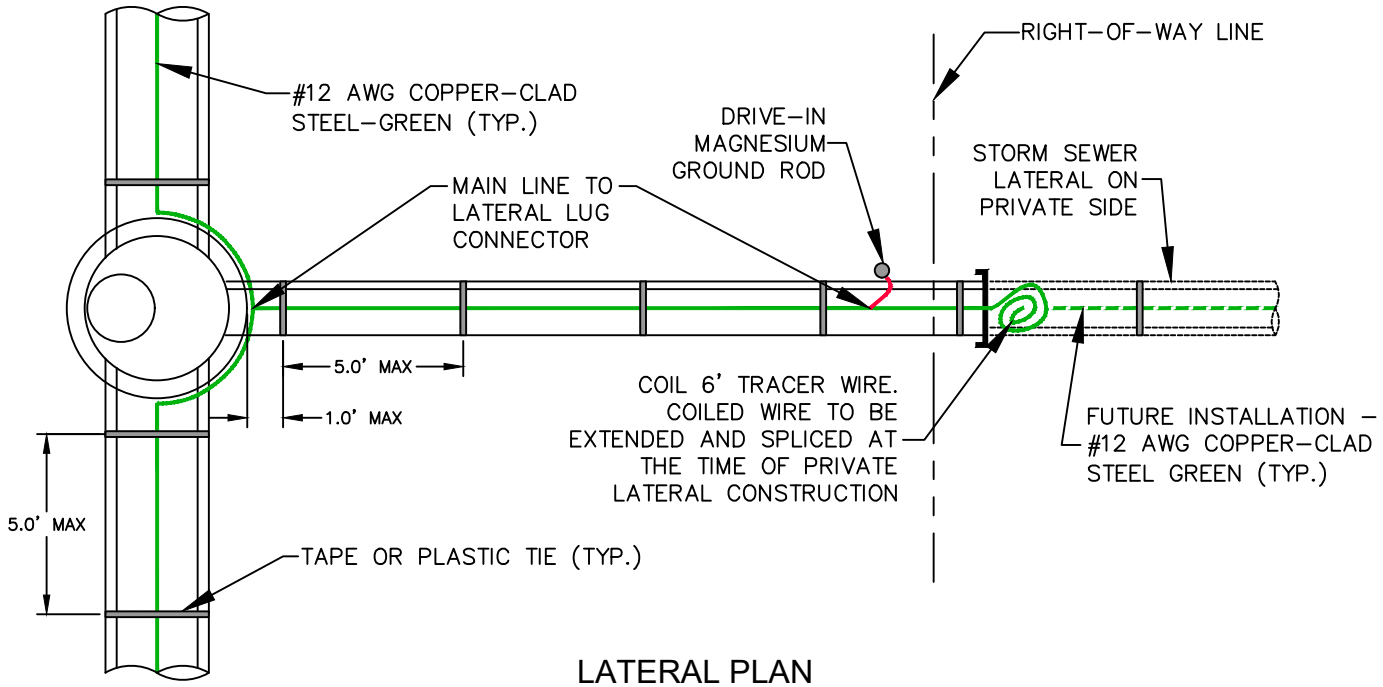

LATERAL PLAN

NO SCALE

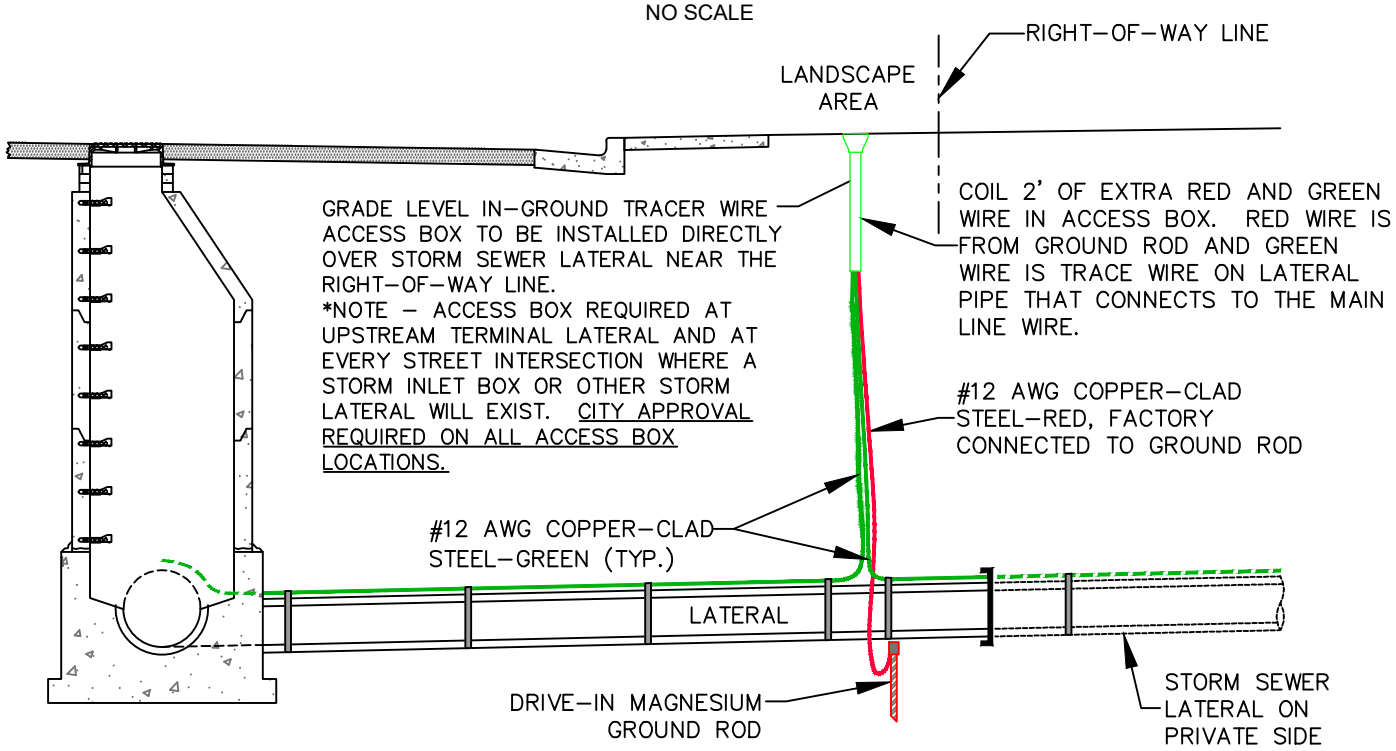

LATERAL PROFILE

NO SCALE

NOTES:

1. WIRE SHOWN AWAY FROM PIPE FOR CLARITY. WIRE SHALL BE INSTALLED IMMEDIATELY ADJACENT TO THE SERVICE PIPE. THE WIRE SHALL BE FASTENED TO THE PIPE WITH TAPE OR PLASTIC TIES AT 5' INTERVALS.
2. TRACER WIRE NOT REQUIRED FOR REHABILITATION PROJECTS.

REVISION	city of PUEBLO colorado	TRACER WIRE LATERAL DETAIL STORM SEWER	SD35
		PUBLIC WORKS DEPARTMENT - ENGINEERING DIVISION 211 EAST "D" ST. PUEBLO, CO 81003 (719) 553-2295 PHONE	DRAWN BY: JH CHECKED BY: SM APPROVED BY: JH

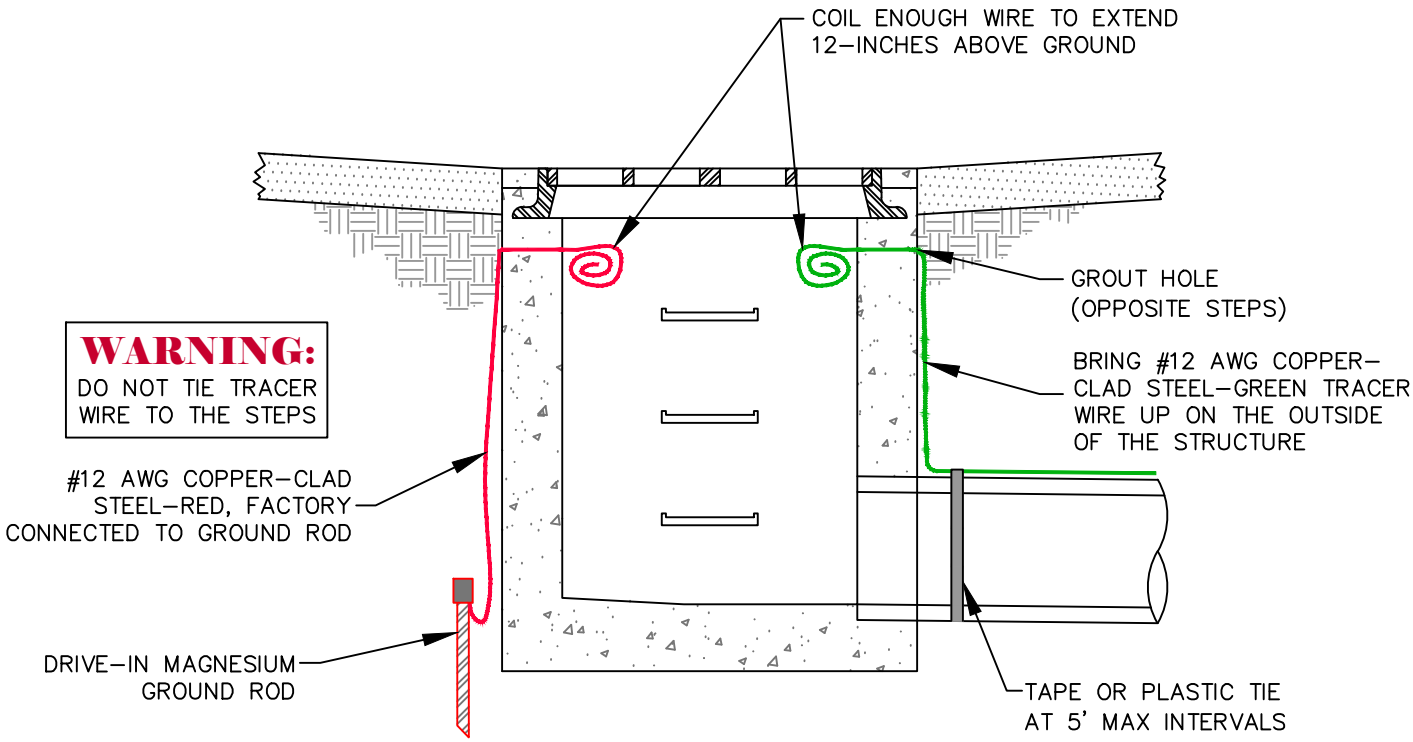

NOTE:
THIS OPTION IS RECOMMENDED FOR INLETS IN A PARKING LOT WHERE A LEVEL IN–GROUND TRACER WIRE ACCESS BOX HAS POTENTIAL TO BE COVERED BY ASPHALT OVERLAY. THIS OPTION REQUIRES CITY OF PUEBLO STORMWATER APPROVAL AND MAY BE SUBJECT TO ADDITIONAL REQUIREMENTS.

INLET OR MANHOLE LOCATED IN A PAVED SURFACE

NO SCALE

REVISION	city of PUEBLO colorado	**TRACER WIRE DETAILS STORM SEWER** PUBLIC WORKS DEPARTMENT - ENGINEERING DIVISION 211 EAST "D" ST. PUEBLO, CO 81003 (719) 553-2295 PHONE	SD36 DRAWN BY: JH CHECKED BY: SM APPROVED BY: JH

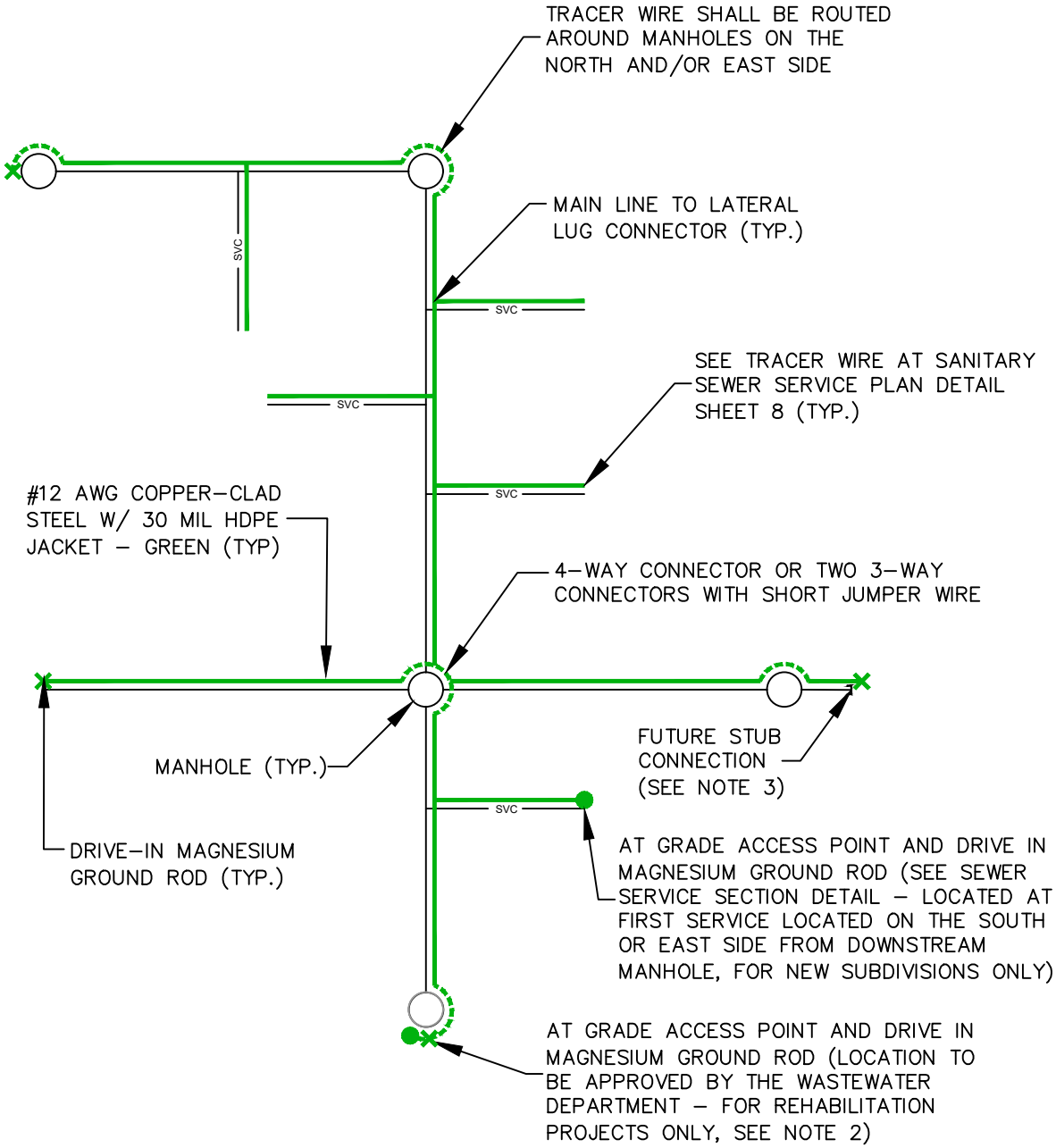

NOTES:

1. WIRE SHOWN AWAY FROM PIPE FOR CLARITY. WIRE SHALL BE INSTALLED ON THE TOP OF THE PIPE. THE WIRE SHALL BE FASTENED TO THE PIPE WITH TAPE OR PLASTIC TIES AT 5' INTERVALS.
2. REHABILITATION PROJECTS SHALL HAVE A DRIVE-IN MAGNESIUM GROUND ROD INSTALLED ON THE UPSTREAM AND DOWNSTREAM MANHOLES AS WELL AS A GRADE LEVEL IN-GROUND ACCESS BOX INSTALLED AT THE DOWNSTREAM MANHOLE (ACCESS BOX TYPE AND LOCATION TO BE APPROVED BY WASTEWATER DEPARTMENT).
3. AT ALL FUTURE STUB CONNECTIONS, A MINIMUM OF 6 FEET OF TRACER WIRE SHALL BE EXTENDED BEYOND THE END OF THE PIPE, COILED AND SECURED FOR FUTURE CONNECTIONS. THE END OF THE TRACER WIRE SHALL BE SPLICED TO THE WIRE OF A DRIVE-IN MAGNESIUM GROUND ROD AND IS TO BE BURIED AT THE SAME ELEVATIONS AS THE SEWER MAIN.

REVISION	city of PUEBLO colorado	**TRACER WIRE SAMPLE PLAN SANITARY SEWER** PUBLIC WORKS DEPARTMENT - ENGINEERING DIVISION 211 EAST "D" ST. PUEBLO, CO 81003 (719) 553-2295 PHONE	SD37 DRAWN BY: JH CHECKED BY: SM APPROVED BY: JH

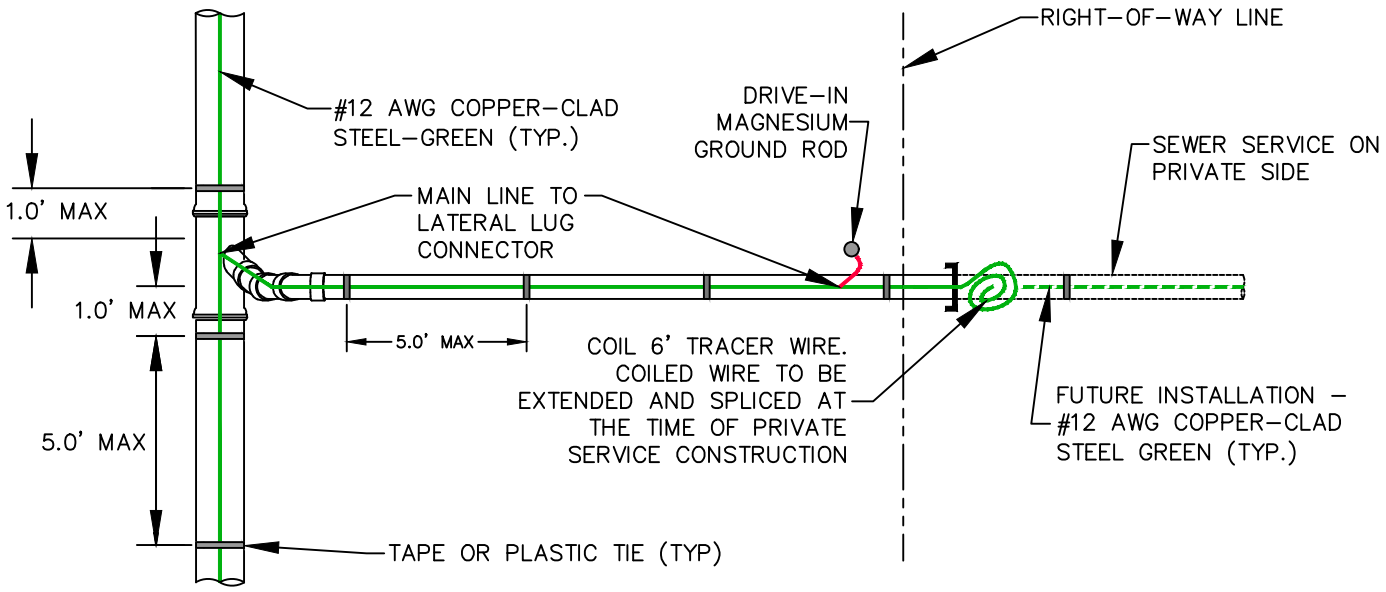

SEWER SERVICE PLAN

NO SCALE

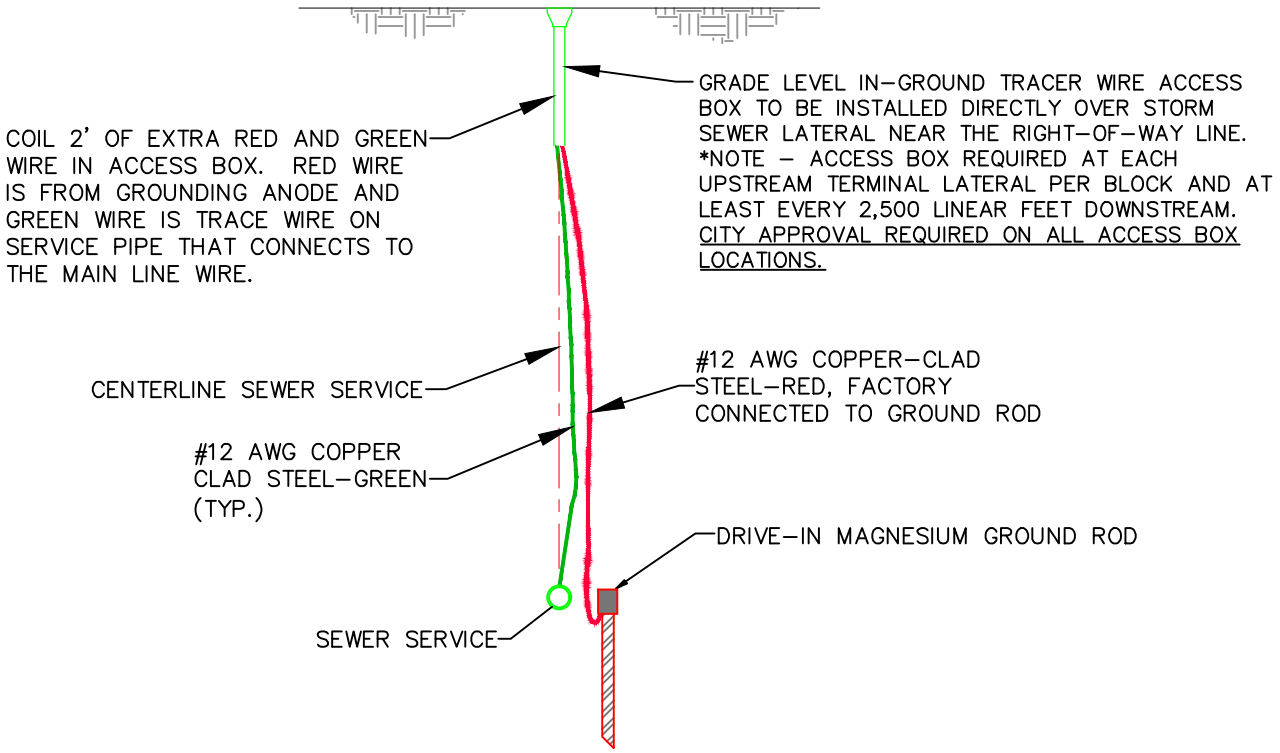

SEWER SERVICE SECTION

NO SCALE

NOTES:

1. WIRE SHOWN AWAY FROM PIPE FOR CLARITY. WIRE SHALL BE INSTALLED IMMEDIATELY ADJACENT TO THE SERVICE PIPE. THE WIRE SHALL BE FASTENED TO THE PIPE WITH TAPE OR PLASTIC TIES AT 5' INTERVALS.
2. TRACER WIRE NOT REQUIRED FOR REHABILITATION PROJECTS.

REVISION	city of PUEBLO colorado	**TRACER WIRE DETAILS** **SANITARY SEWER SERVICE** PUBLIC WORKS DEPARTMENT - ENGINEERING DIVISION 211 EAST "D" ST. PUEBLO, CO 81003 (719) 553-2295 PHONE	SD38 DRAWN BY: JH CHECKED BY: SM APPROVED BY: JH

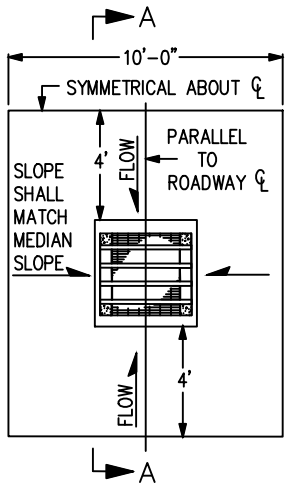

INLET WITH DITCH PAVING

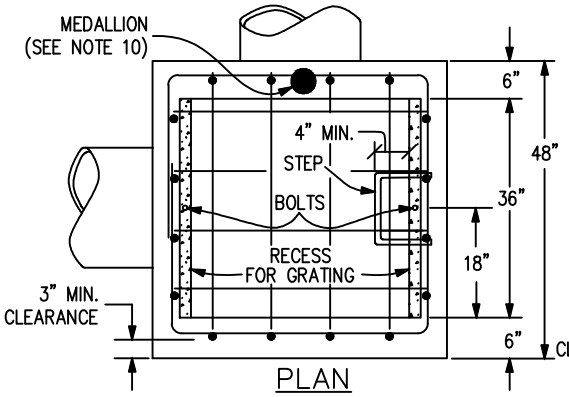

PLAN

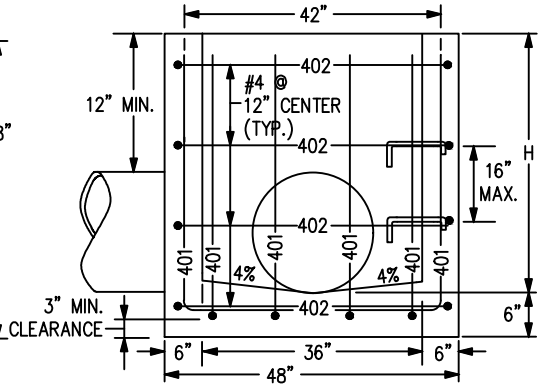

ELEVATION
CONCRETE INLET

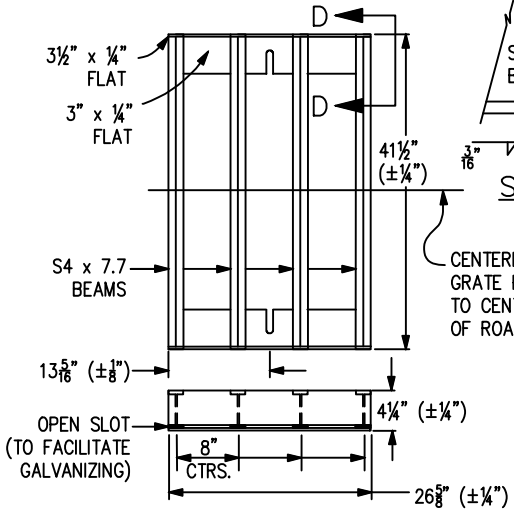

STANDARD INLET GRATE

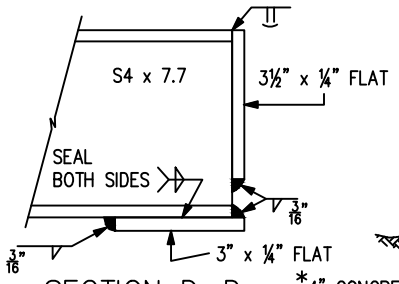

SECTION D–D

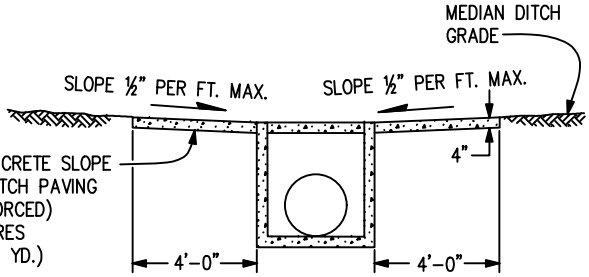

SECTION A–A

*CONCRETE SLOPE AND DITCH PAVING WILL BE REQUIRED WHEN SHOWN ON THE PLANS.

INLET AT BOTTOM OF VERTICAL CURVE
(FLOW FROM TWO DIRECTIONS)

STEEL GRATE QUANTITIES

NO. PIECES	DESCRIPTION	LENGTH	LBS PER FT.	WEIGHT (LBS.)
4	S4 x 7.7 BEAM	41"	7.90	106
2	3½" x ¼" FLAT	26⅝"	2.98	13
2	3" x ¼" FLAT	26⅝"	2.55	12

TOTAL LBS. – 131

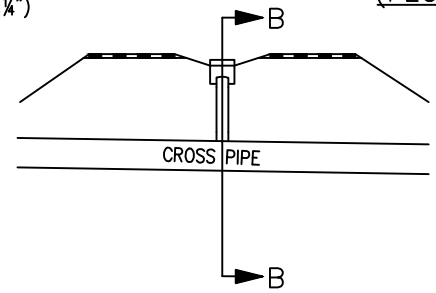

SECTION VIEW

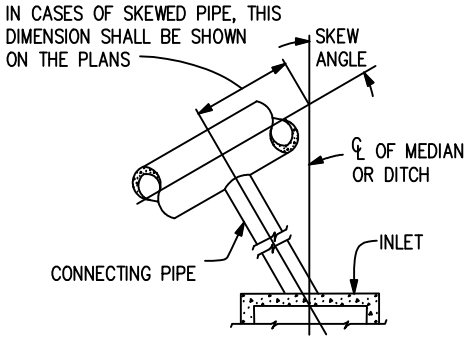

INLET CONNECTED TO A
SKEWED CROSS PIPE

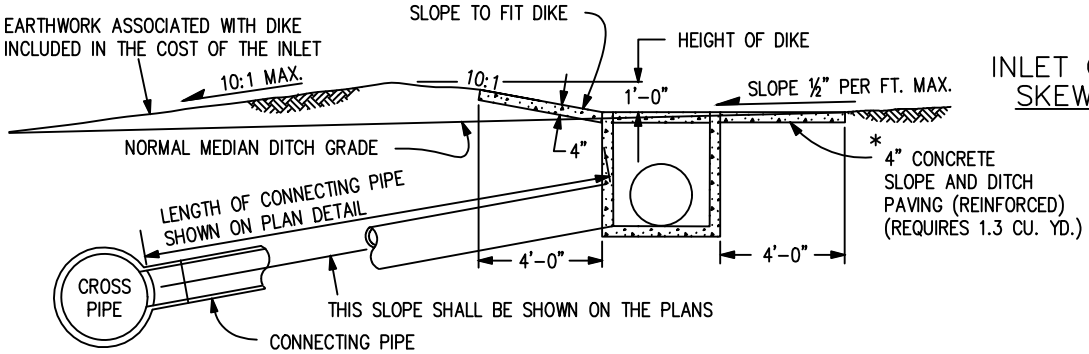

SECTION B–B

INLET CONNECTED
TO A CROSS PIPE

SECTION A–A

INLET ON GRADE
(FLOW FROM ONE DIRECTION)

09/03/2024	city of PUEBLO colorado	INLET, TYPE C (1 OF 2)	SW1.1
01/01/2023		PUBLIC WORKS DEPARTMENT - ENGINEERING DIVISION 211 EAST "D" ST. PUEBLO, CO 81003 (719) 553-2295 PHONE	DRAWN BY: NLS CHECKED BY: JS APPROVED BY: JH
REVISIONS			

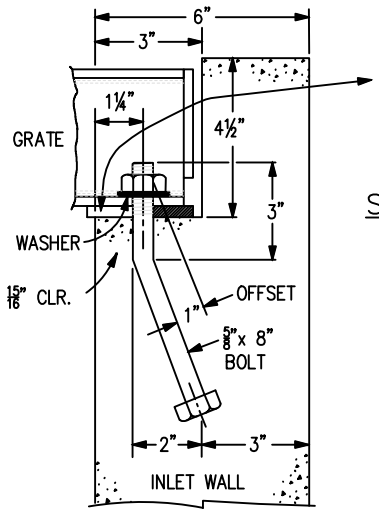

GRATE INSTALLATION DETAIL

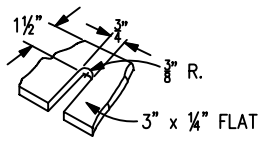

SLOT DETAIL

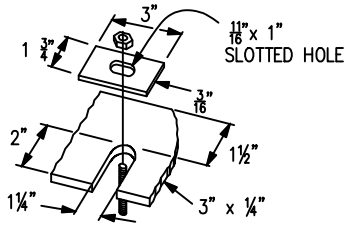

ALTERNATE SLOT AND HOLD DOWN PLATE DETAIL

QUANTITIES FOR ONE INLET

H	CONCRETE (CU. YDS.) ▼	STEEL (LBS.) ▼	NO. STEPS REQ'D.
2'-6"	1.0	76	0
3'-0"	1.1	81	0
3'-6"	1.2	97	0
4'-0"	1.3	102	1
4'-6"	1.5	117	2
5'-0"	1.6	123	2
5'-6"	1.7	138	2
6'-0"	1.9	143	3
6'-6"	2.0	159	3
7'-0"	2.1	164	3
7'-6"	2.2	180	4
8'-0"	2.4	185	4
8'-6"	2.5	200	4
9'-0"	2.6	206	5
9'-6"	2.8	221	5
10'-0"	2.9	236	6
11'-6"	3.3	252	6

▼ PIPE INSIDE DIAMETER SHALL BE 30 IN. OR LESS. CONCRETE AND STEEL QUANTITIES ARE FOR ONE ENTIRE INLET BEFORE DEDUCTION FOR VOLUME OCCUPIED BY PIPE. WEIGHT OF STEEL INCLUDES A RING FOR THE MAXIMUM PIPE DIAMETER.

GENERAL NOTES

1. INLET TYPE C IS NOT HS-20 RATED AND SHALL NOT BE PLACED IN PAVED ROADWAYS. THIS INLET SHALL BE USED ONLY OUTSIDE PAVED ROADWAYS.
2. CONCRETE SHALL BE CLASS B. INLET MAY BE CAST-IN-PLACE OR PRECAST.
3. REINFORCING BARS SHALL BE GRADE 60, EPOXY COATED, AND DEFORMED #4, AND SHALL HAVE A MIN. 2 INCH CLEARANCE. CUT OR BEND AROUND PIPES AS REQUIRED.
4. CONCRETE SLOPE AND DITCH PAVING SHALL BE IN ACCORDANCE WITH SECTION 507. REINFORCEMENT FOR CONCRETE SLOPE PAVING SHALL BE 6 X 6 - W1.4 X W1.4 OR 6 X 6 - W2.1 X W2.1.
5. STRUCTURAL STEEL FOR GRATES AND GRATE INSTALLATION HARDWARE SHALL BE GALVANIZED, AND SHALL BE IN ACCORDANCE WITH SUBSECTION 712.06.
6. THE STANDARD INLET GRATES SHALL BE USED ON ALL TYPE C INLETS UNLESS CLOSE MESH INLET GRATES ARE SPECIFIED ON THE PLANS.
7. CLOSE MESH GRATES ARE RECOMMENDED WHERE FOOT TRAFFIC OR BICYCLE ROUTES ARE IN CLOSE PROXIMITY TO GRATE. THIS GRATE IS NOT ADA COMPLIANT OR BICYCLE FRIENDLY AND SHALL NOT BE PLACED DIRECTLY IN SIDEWALKS, CROSSWALKS OR BIKE PATHS.
8. STEPS SHALL BE PROVIDED WHEN INLET DIMENSION "H" IS EQUAL TO OR GREATER THAN 3 FEET - 6 INCHES AND SHALL CONFORM TO AASHTO M 199.
9. SEE STANDARD PLAN M-604-11, FOR REINFORCEMENT AROUND THE PIPE OPENING.
10. ALL INLETS SHALL HAVE A 4 INCH DIA. METAL MEDALLION WITH A "NO DUMPING DRAINS TO STREAM" MESSAGE ON IT. THE MEDALLION SHALL HAVE A FISH SYMBOL WITH A BLUE BACKGROUND. IT SHALL BE FIRMLY ATTACHED TO THE TOP OF THE INLET WITH A PERMANENT FASTENER.

BAR LIST FOR H = 2 FT.-6 IN. AND BENDING DIAGRAM

MARK	NO. REQ'D.	HEIGHT	LENGTH
401	2	2'-2½"	8'-0"
401	6	2'-7"	8'-8"
402	4	"U"	15'-4"

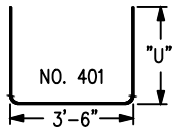

"U" INCREASE DIMENSION 6 IN. FOR EACH 6 IN. INCREASE OF "H" ABOVE 2 FT.-6 IN.

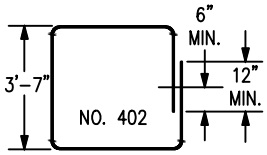

ADD ONE BAR FOR EACH FT. INCREASE OF "H" ABOVE 2 FT. - 6 IN.

402 BARS SHALL BE EQUALLY SPACED FROM EACH OTHER.

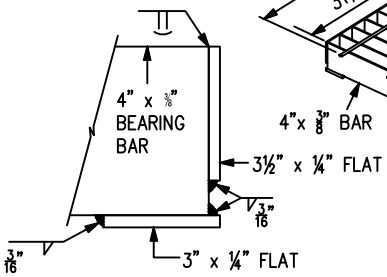

SECTION E-E

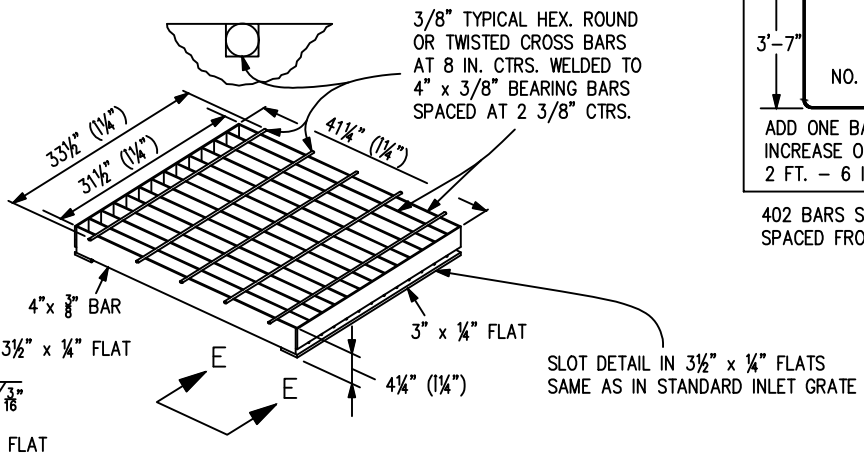

CLOSE MESH INLET GRATE

09/03/2024	city of PUEBLO colorado	INLET, TYPE C (2 OF 2)	SW1.2
01/01/2023		PUBLIC WORKS DEPARTMENT - ENGINEERING DIVISION 211 EAST "D" ST. PUEBLO, CO 81003 (719) 553-2295 PHONE	DRAWN BY: NLS CHECKED BY: JS APPROVED BY: JH
REVISIONS			

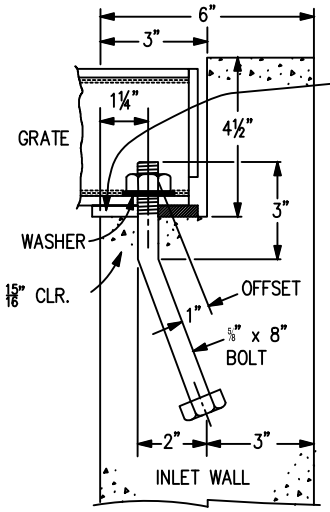

GRATE INSTALLATION DETAIL

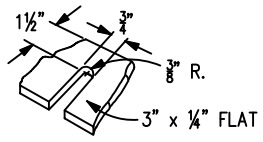

SLOT DETAIL

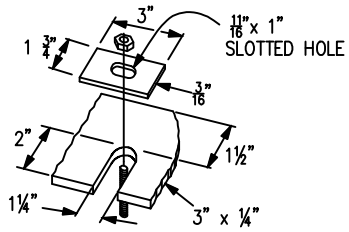

ALTERNATE SLOT AND HOLD DOWN PLATE DETAIL

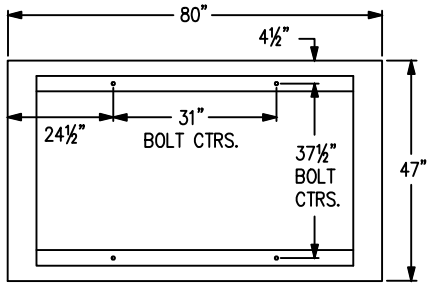

PLAN VIEW
(SHOWING ANCHOR BOLT LAYOUT)

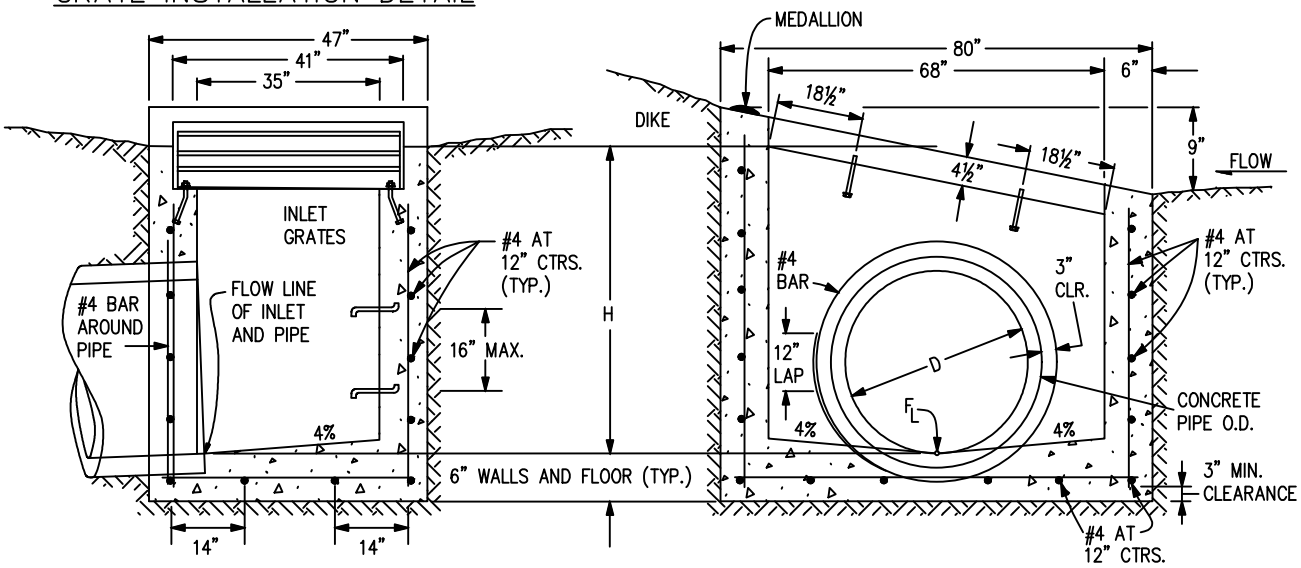

TRANSVERSE CROSS SECTION

LONGITUDINAL CROSS SECTION

SLOPING GRATE INSTALLATION

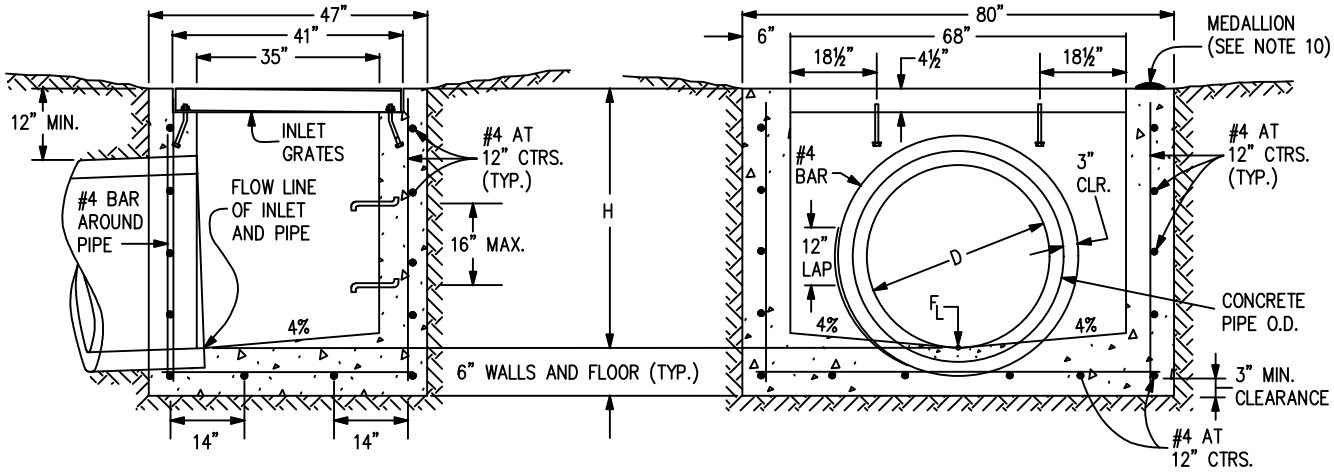

TRANSVERSE CROSS SECTION

LONGITUDINAL CROSS SECTION

LEVEL GRATE INSTALLATION

09/03/2024 01/01/2023 REVISIONS	city of PUEBLO colorado	INLET, TYPE D (1 OF 2) PUBLIC WORKS DEPARTMENT - ENGINEERING DIVISION 211 EAST "D" ST. PUEBLO, CO 81003 (719) 553-2295 PHONE	SW2.1 DRAWN BY: NLS CHECKED BY: JS APPROVED BY: JH

GENERAL NOTES

1. INLET TYPE D IS NOT HS-20 RATED AND SHALL NOT BE PLACED IN PAVED ROADWAYS. THIS INLET SHALL BE USED ONLY OUTSIDE PAVED ROADWAYS.
2. CONCRETE SHALL BE CLASS B. INLET MAY BE CAST-IN-PLACE OR PRECAST.
3. SEE PLANS FOR SIZE AND LOCATION OF PIPE.
4. STRUCTURAL STEEL FOR GRATES AND GRATE INSTALLATION HARDWARE SHALL BE GALVANIZED AND SHALL BE IN ACCORDANCE WITH SUBSECTION 712.06.
5. STANDARD INLET GRATES SHALL BE USED ON ALL TYPE D INLETS UNLESS CLOSE MESH GRATES ARE SPECIFIED ON THE PLANS.
6. CLOSE MESH GRATES ARE RECOMMENDED WHERE FOOT TRAFFIC OR BICYCLE ROUTES ARE IN CLOSE PROXIMITY TO GRATE. THIS GRATE IS NOT ADA COMPLIANT OR BICYCLE FRIENDLY AND SHALL NOT BE PLACED DIRECTLY IN SIDEWALKS, CROSSWALKS OR BIKE PATHS.
7. STEPS SHALL BE PROVIDED WHEN INLET DIMENSION "H" IS EQUAL TO OR GREATER THAN 3 FEET-6 INCHES AND SHALL CONFORM WITH AASHTO M 199.
8. REINFORCING BARS SHALL BE GRADE 60, EPOXY COATED, AND DEFORMED #4, AND SHALL HAVE A 2 INCH MIN. CLEARANCE. CUT OR BEND BARS AROUND PIPE AS REQUIRED.
9. ALL INLETS SHALL HAVE A 4 INCH DIA. METAL MEDALLION WITH A "NO DUMPING DRAINS TO STREAM" MESSAGE ON IT. THE MEDALLION SHALL HAVE A FISH SYMBOL WITH A BLUE BACKGROUND. IT SHALL BE FIRMLY ATTACHED TO THE INLET'S SURFACE WITH A PERMANENT FASTENER.

"H" FT.	CONCRETE CU. YDS. ▼	STEEL LBS. ▼	CIRCULAR PIPE RANGE INSIDE DIA., IN. – "D"
3.0	1.5	127	18
3.5	1.7	149	18–24
4.0	1.9	157	18–30
4.5	2.0	179	18–36
5.0	2.2	187	18–42
5.5	2.4	208	18–42
6.0	2.6	215	18–42
6.5	2.8	236	18–42
7.0	2.9	243	18–42
7.5	3.1	264	18–42
8.0	3.3	271	18–42
8.5	3.5	292	18–42
9.0	3.6	299	18–42
9.5	3.8	320	18–42
10.0	4.0	327	18–42

▼ CONCRETE AND STEEL QUANTITIES ARE FOR ONE ENTIRE INLET BEFORE DEDUCTION FOR VOLUME OCCUPIED BY PIPE. WEIGHT OF STEEL INCLUDES A RING FOR THE MAXIMUM PIPE DIAMETER.

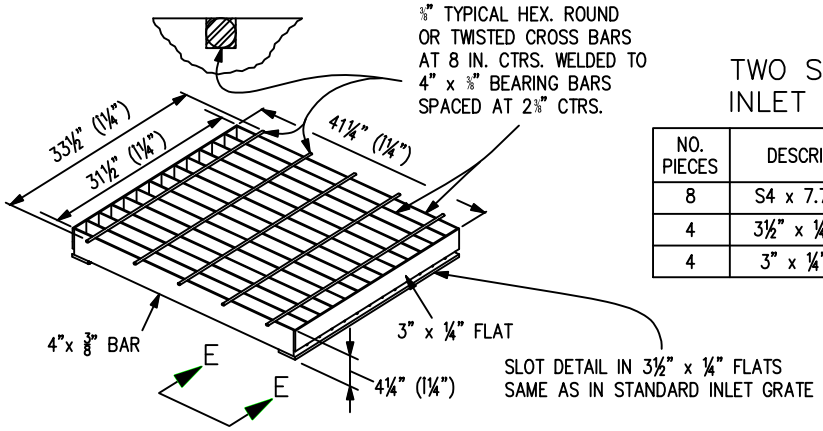

CLOSE MESH GRATE

TWO STEEL GRATE PER INLET QUANTITIES

NO. PIECES	DESCRIPTION	LENGTH	LBS PER FT.	WEIGHT (LBS.)
8	S4 x 7.7 BEAM	40"	7.70	206
4	3½" x ¼" FLAT	26⅝"	2.98	26
4	3" x ¼" FLAT	26⅝"	2.55	24

TOTAL LBS. – 256

OUTLET PIPE INSIDE DIA. FT. – "D"	MIN. "H" FT.
1.5	3.0
2.0	3.5
2.5	4.0
3.0	4.5
3.5	5.0

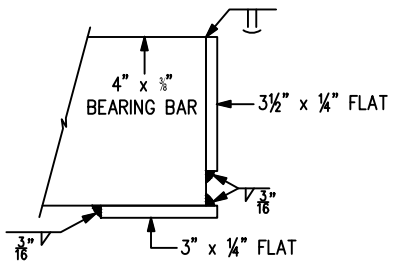

SECTION E–E

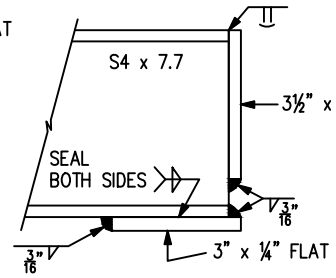

SECTION D–D

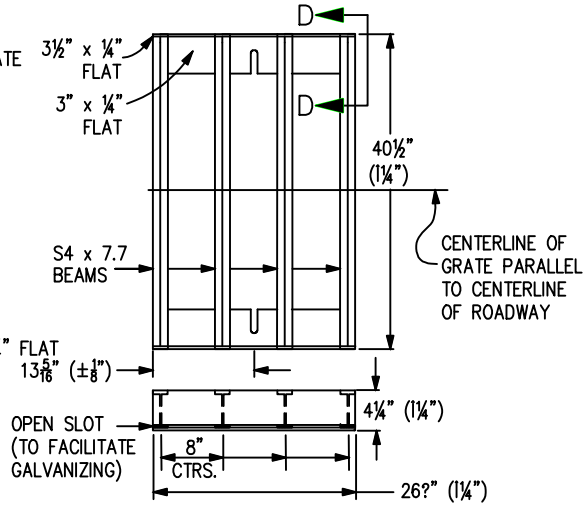

STANDARD INLET GRATE

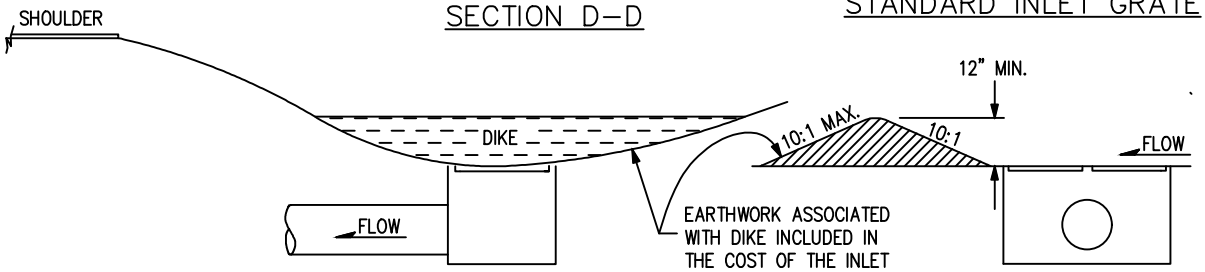

TRANSVERSE VIEW

LONGITUDINAL VIEW

DIKE

09/03/2024	city of PUEBLO colorado	INLET, TYPE D (2 OF 2)	SW2.2
01/01/2023		PUBLIC WORKS DEPARTMENT - ENGINEERING DIVISION 211 EAST "D" ST. PUEBLO, CO 81003 (719) 553-2295 PHONE	DRAWN BY: NLS CHECKED BY: JS APPROVED BY: JH
REVISIONS			

★ FOR LENGTH (L) 10 FT. OR MORE, PROVIDE MAINTENANCE ACCESS AT BOTH ENDS WITH AN ADDITIONAL MANHOLE RING AND COVER. CUT REINFORCEMENT BAR ACCORDINGLY.

✚ STATION POINT AT MIDPOINT OF INLET ALONG FLOWLINE

* WHEN A TYPE R INLET IS USED WITH MOUNTABLE CURB AND GUTTER, 5 FT. TRANSITION SHALL BE CONSTRUCTED. TRANSITION SHALL BE PAID FOR AS CURB AND GUTTER.

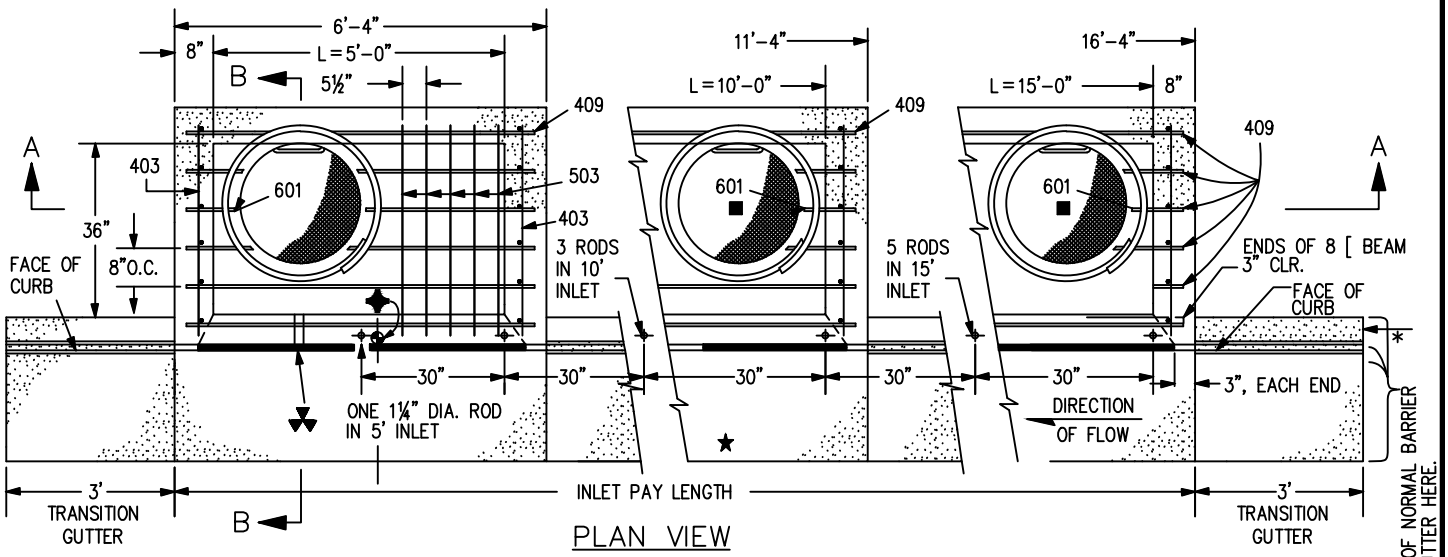

PLAN VIEW

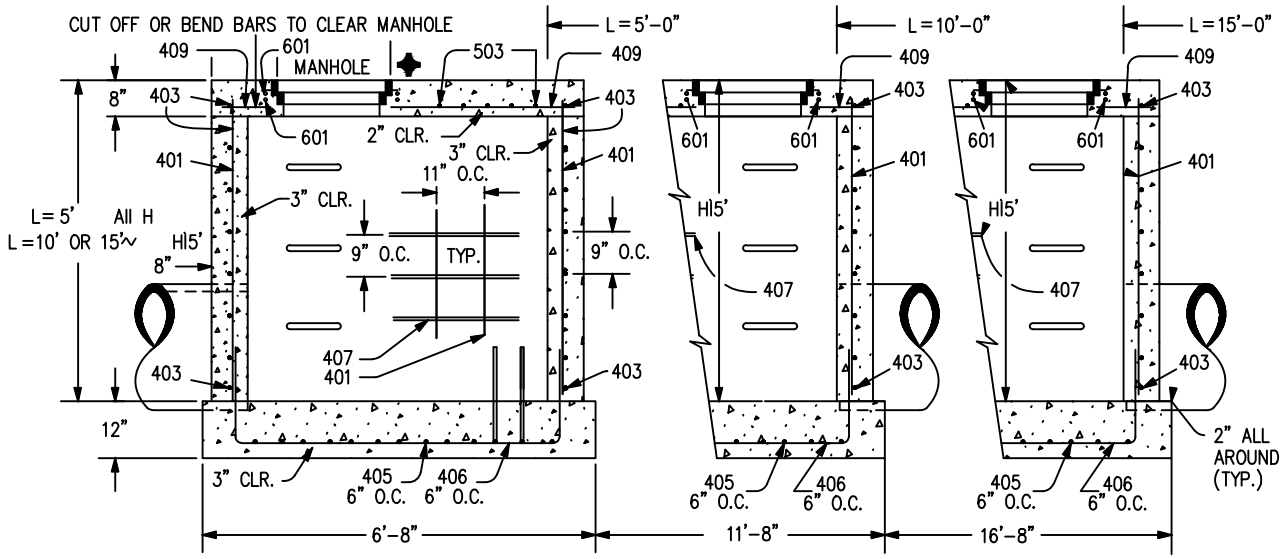

SECTION A–A REGULAR INLET

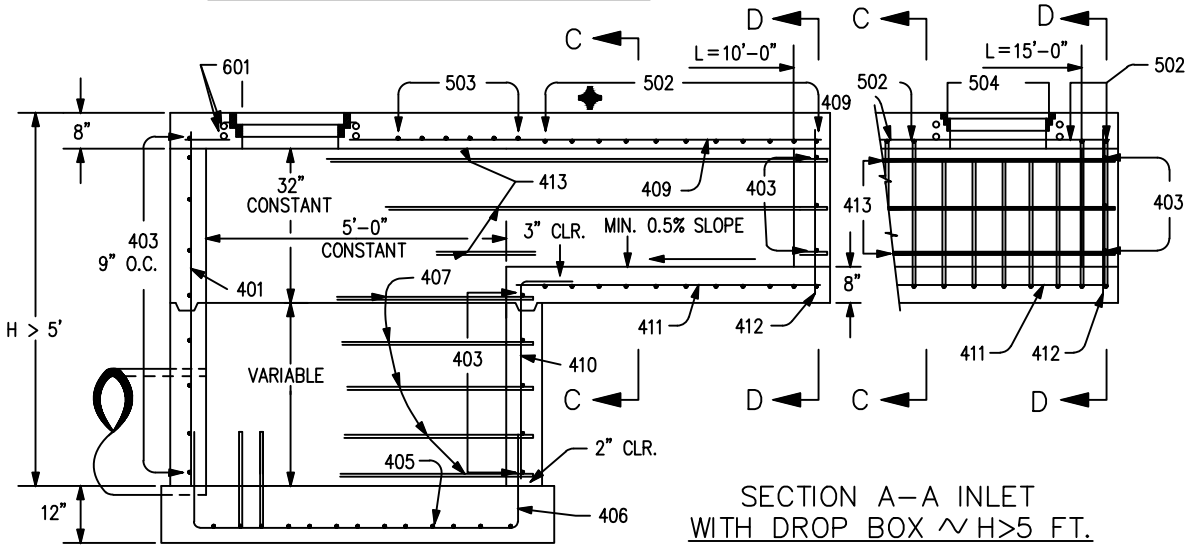

SECTION A–A INLET WITH DROP BOX ~ H>5 FT.

09/03/2024	city of PUEBLO colorado	INLET, TYPE R (1 OF 4)	SW3.1
01/01/2023		PUBLIC WORKS DEPARTMENT - ENGINEERING DIVISION 211 EAST "D" ST. PUEBLO, CO 81003 (719) 553-2295 PHONE	DRAWN BY: NLS CHECKED BY: JS APPROVED BY: JH
REVISIONS			

▲ – FOR A 1'–0" PAN SLOPE 2" PER FT.

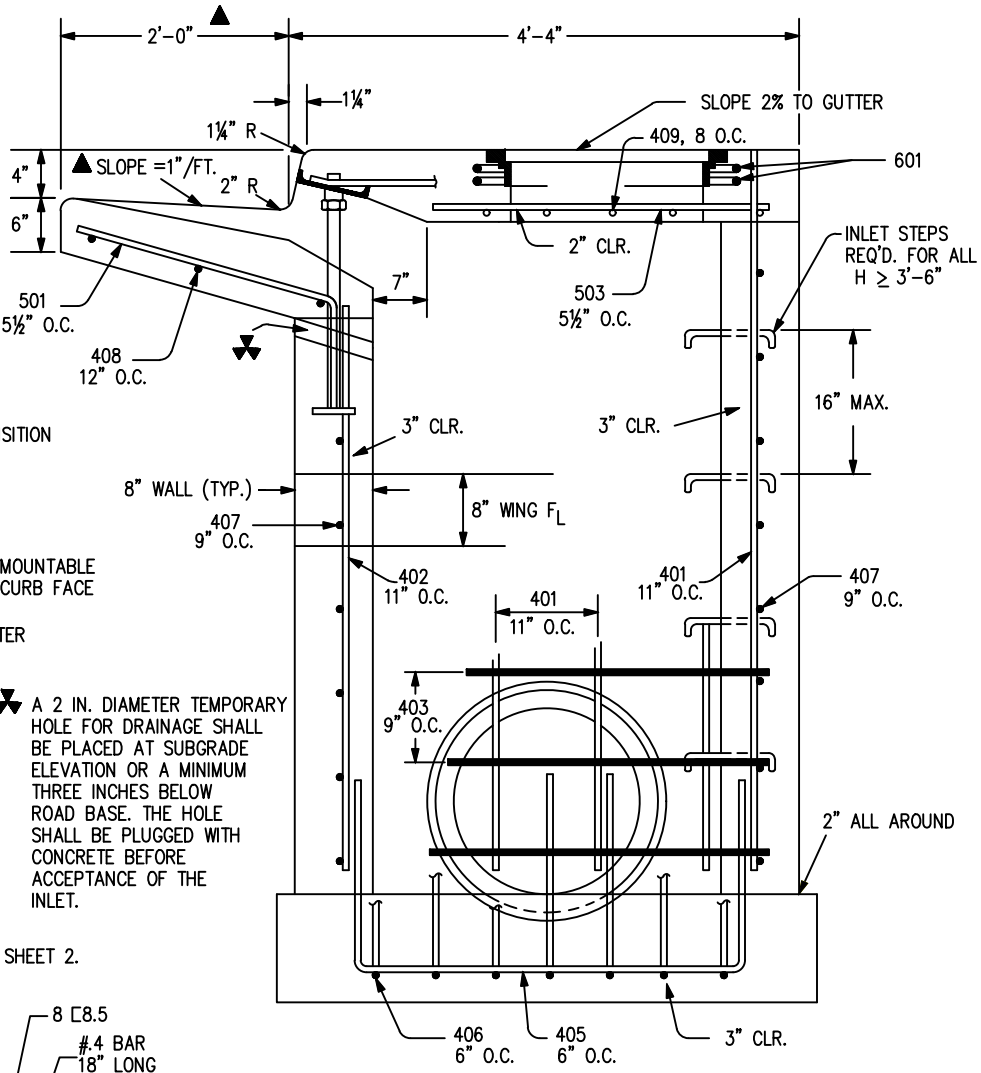

SECTION B–B
END VIEW

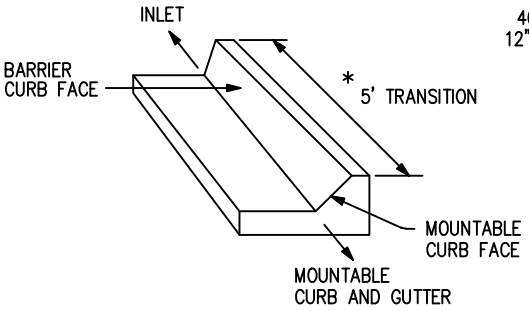

TRANSITION CURB

* WHEN A TYPE R INLET IS USED WITH MOUNTABLE CURB AND GUTTER, 5 FT. TRANSITION SHALL BE CONSTRUCTED. TRANSITION SHALL BE PAID FOR AS CURB AND GUTTER.

A 2 IN. DIAMETER TEMPORARY HOLE FOR DRAINAGE SHALL BE PLACED AT SUBGRADE ELEVATION OR A MINIMUM THREE INCHES BELOW ROAD BASE. THE HOLE SHALL BE PLUGGED WITH CONCRETE BEFORE ACCEPTANCE OF THE INLET.

NOTE: MANHOLE RING AND COVER, STATION POINT AND OUTFLOW PIPE SHALL BE LOCATED AT THE SAME END OF THE INLET.

SEE CHANNEL LAYOUT ON SHEET 2.

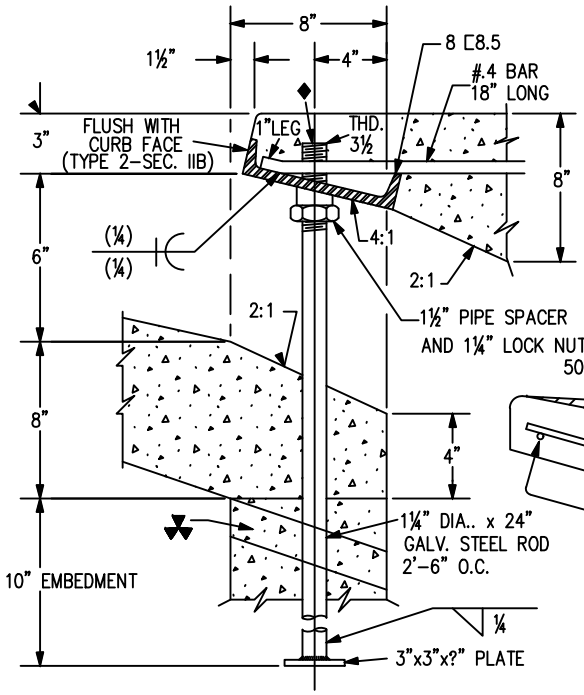

CURB FACE ASSEMBLY

◆PLACE ENTIRE ASSEMBLY BEFORE POURING CONCRETE.

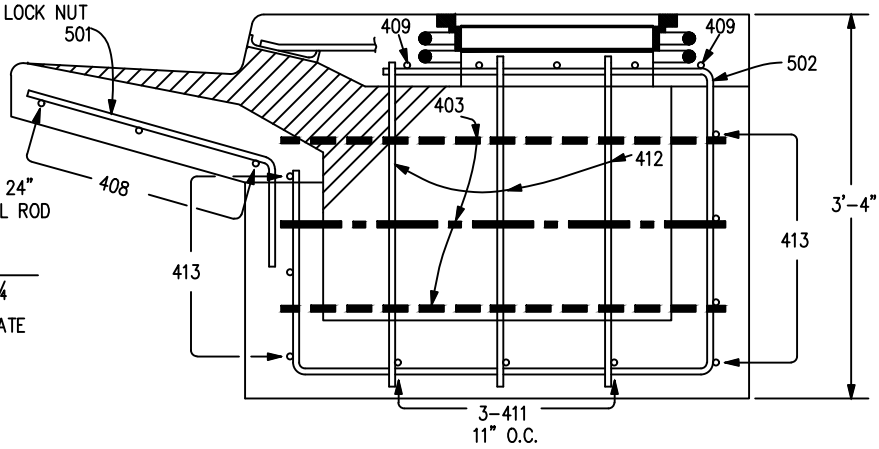

SECTIONS C–C & D–D
(DOTTED BARS ARE IN SECTION D–D)

09/03/2024	city of PUEBLO colorado	INLET, TYPE R (2 OF 4)	SW3.2
01/01/2023		PUBLIC WORKS DEPARTMENT - ENGINEERING DIVISION 211 EAST "D" ST. PUEBLO, CO 81003 (719) 553-2295 PHONE	DRAWN BY: NLS CHECKED BY: JS APPROVED BY: JH
REVISIONS			

MARK	BAR # OR SIZE	O.C. SPACING	TYPE	ALL INLETS		INLETS: H ≤ 5 FT.				INLETS: H > 5 FT.			
				L = 5 FT.		L = 10 FT.		L = 15 FT.		L = 10 FT.		L = 15 FT.	
				NO. REQ'D.	LENGTH	NO. REQ'D.	LENGTH	NO. REQ'D.	LENGTH	NO. REQ'D.	LENGTH	NO. REQ'D.	LENGTH
401	4	11"	II	15	*	21	*	26	*	11	*	11	*
402	4	11"	II	7	*	13	*	18	*	7	*	7	*
403	4	9"	II	*	4'-0"	*	4'-0"	*	4'-0"	*	4'-0"	*	4'-0"
405	4	6"	VI	11	6'-10"	21	6'-10"	31	6'-10"	11	6'-10"	11	6'-10"
406	4	6"	VIII	7	8'-10"	7	13'-10"	7	18'-10"	7	8'-10"	7	8'-10"
407	4	9"	II	*	5'-10"	*	10'-10"	*	15'-10"	*	5'-10"	*	5'-10"
408	4	12"	II	3	6'-10"	3	11'-10"	3	16'-0"	3	11'-10"	3	16'-0"
409	4	8"	II	6	5'-10"	6	10'-10"	6	15'-10"	6	10'-10"	6	15'-10"
410	4	11"	VII							3		3	*
411	4	11"	II							3	5'-2"	3	10-2"
412	4	11"	II							3	2'-9"	3	2'-9"
413	4	9"	II							7	10'-10"	7	15'-10"
501	5	5½"	IV	11	3'-4"	22	3'-4"	33	3'-4"	22	3'-4"	33	3'-4"
502	5	5½"	III							11	11'-5"	17	11'-5"
503	5	5½"	II	5	3'-6"	16	3'-6"	27	3'-6"	6	3'-6"	6	3'-6"
504	5	5½"	IX									5	8'-4"
601	6	2½"	V	2	8'-10"	2	8'-10"	2	8'-10"	2	8'-10"	4	8'-10"
■8[8.5				1	5'-10"	1	10'-10"	1	15'-10"	1	10'-10"	1	15'-10"
				2 BARS, 1 RODS	——	4 BARS, 3 RODS	——	8 BARS, 5 RODS	——	4 BARS, 3 RODS	——	8 BARS, 5 RODS	——

* VARIABLE REFER TO TABLE TWO.

■ INCLUDE #4, 18 IN. BARS (SEE CHANNEL LAYOUT).

REGULAR INLETS

DROP BOX INLETS

TABLE ONE ~ BAR LIST FOR CURB INLETS, TYPE "R"

"H"	LENGTH			NO. REQ'D. REGULAR		NO. REQ'D. DROP BOX		L = 5 FT.		L = 10 FT.		L = 15 FT.	
	401	402	410	403	407	403	407	CONC. CU. YDS.	STEEL LBS.	CONC. CU. YDS.	STEEL LBS.	CONC. CU. YDS.	STEEL LBS.
3'-0"	2'-8"	1'-8"		10	7			3.2	285	5.3	497	7.4	706
3'-6"	3'-2"	2'-2"		10	7			3.4	305	5.7	528	7.9	747
4'-0"	3'-8"	2'-8"		12	9			3.7	326	6.0	559	8.4	786
4'-6"	4'-2"	3'-2"		12	9			3.9	334	6.4	571	8.8	803
5'-0"	4'-8"	3'-8"		14	11			4.1	354	6.7	602	9.3	844
5'-6"	5'-2"	4'-2"	3'-5"	16	13	15	6	4.4	375	6.0	607	7.4	850
6'-0"	5'-8"	4'-8"	3'-11"	16	13	16	6	4.6	382	6.2	616	7.6	860
6'-6"	6'-2"	5'-2"	4'-5"	18	15	18	8	4.8	402	6.4	637	7.8	880
7'-0"	6'-8"	5'-8"	4'-11"	20	17	19	10	5.0	423	6.6	654	8.0	897
7'-6"	7'-2"	6-2"	5'-5"	20	17	20	10	5.3	430	6.9	664	8.3	907
8'-0"	7'-8"	6'-8"	5'-11"	22	19	22	12	5.5	451	7.1	684	8.5	927
8'-6"	8'-2"	7'-2"	6'-5"	24	21	23	14	5.7	471	7.3	702	8.7	944
9'-0"	8'-8"	7'-8"	6'-11"	24	21	24	14	6.0	479	7.6	711	9.0	954
9'-6"	9'-2"	8'-2"	7'-5"	26	23	26	16	6.2	499	7.8	732	9.2	974
10'-0"	9'-8"	8'-8"	7'-11"	28	25	27	18	6.4	520	8.0	749	9.4	992
10'-6"	10'-2"	9'-2"	8'-5"	28	25	28	18	6.7	527	8.3	759	9.7	1001
11'-0"	10'-8"	9'-8"	8'-11"	30	27	30	20	6.9	547	8.5	779	9.9	1022

NOTES: FOR L= 5 FT., L= 10 FT., AND L= 15 FT.
REGULAR INLETS: TOTAL QUANTITIES NEEDED ARE OUTSIDE THE HEAVY BLACK LINE.
DROP BOX INLETS: TOTAL QUANTITIES NEEDED ARE INSIDE THE HEAVY BLACK LINE.

STEEL WEIGHTS DO NOT INCLUDE STRUCTURAL STEEL CHANNEL.

TABLE TWO ~ BARS AND QUANTITIES VARIABLE WITH "H"

09/03/2024	city of PUEBLO colorado	INLET, TYPE R (3 OF 4)
01/01/2023		PUBLIC WORKS DEPARTMENT - ENGINEERING DIVISION 211 EAST "D" ST. PUEBLO, CO 81003 (719) 553-2295 PHONE
REVISIONS		

SW3.3

DRAWN BY: NLS
CHECKED BY: JS
APPROVED BY: JH

GENERAL NOTES

1. CONCRETE SHALL BE CLASS B. INLET MAY BE CAST-IN-PLACE OR PRECAST.
2. CONCRETE WALLS SHALL BE FORMED ON BOTH SIDES AND SHALL BE 8 INCHES THICK.
3. INLET STEPS SHALL BE IN CONFORMANCE WITH AASHTO M 199.
4. CURB FACE ASSEMBLY SHALL BE GALVANIZED AFTER WELDING.
5. EXPOSED CONCRETE CORNERS SHALL BE CHAMFERED ¾ OF A INCH. CURB AND GUTTER CORNERS SHALL BE FINISHED TO MATCH THE EXISTING CURB AND GUTTER BEYOND THE TRANSITION GUTTER.
6. REINFORCING BARS SHALL BE DEFORMED AND SHALL HAVE A 2 INCH MINIMUM CLEARANCE. ALL REINFORCING BARS SHALL BE GRADE 60 AND EPOXY COATED.
7. DIMENSIONS AND WEIGHTS OF TYPICAL MANHOLE RING AND COVER ARE NOMINAL.
8. MATERIAL FOR MANHOLE RINGS AND COVERS SHALL BE GRAY OR DUCTILE CAST IRON IN ACCORDANCE WITH SUBSECTION 712.06.
9. SINCE PIPE ENTRIES INTO THE INLET ARE VARIABLE, THE DIMENSIONS SHOWN ARE TYPICAL. ACTUAL DIMENSIONS AND QUANTITIES FOR CONCRETE AND REINFORCEMENT SHALL BE AS REQUIRED IN THE WORK. QUANTITIES INCLUDE VOLUMES OCCUPIED BY PIPES.
10. ALL MANHOLE COVERS SHALL BE CAST WITH A "NO DUMPING DRAINS TO STREAM" MESSAGE AND A FISH SYMBOL. THE SURFACE OF THE MANHOLE COVER SHALL HAVE A NON-SLIP PATTERN.
11. STRUCTURAL STEEL SHALL BE GALVANIZED AND SHALL BE IN ACCORDANCE WITH SUBSECTION 712.06.

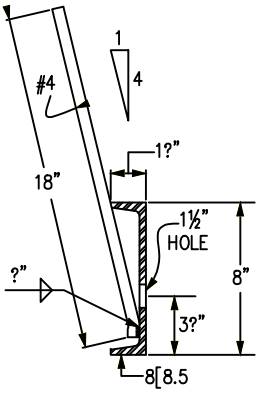

SECTION AT HOLE (TYP.)

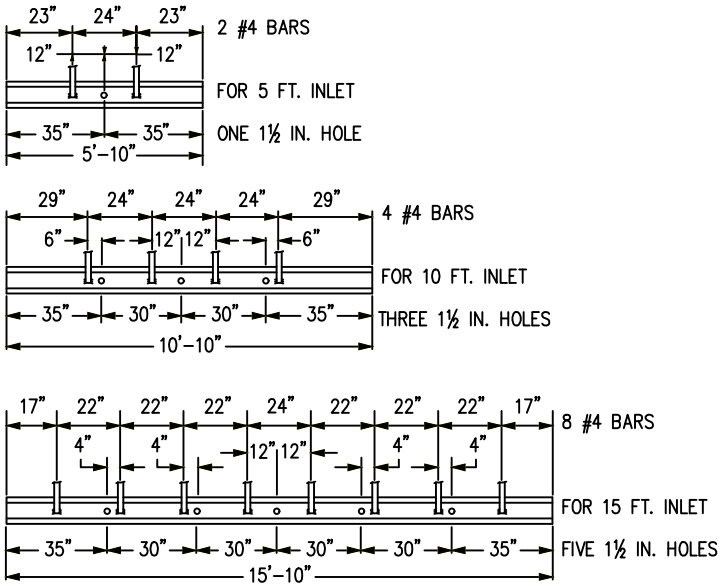

CHANNEL LAYOUT DETAILS

SEE CURB FACE ASSEMBLY ON SHEET 1.

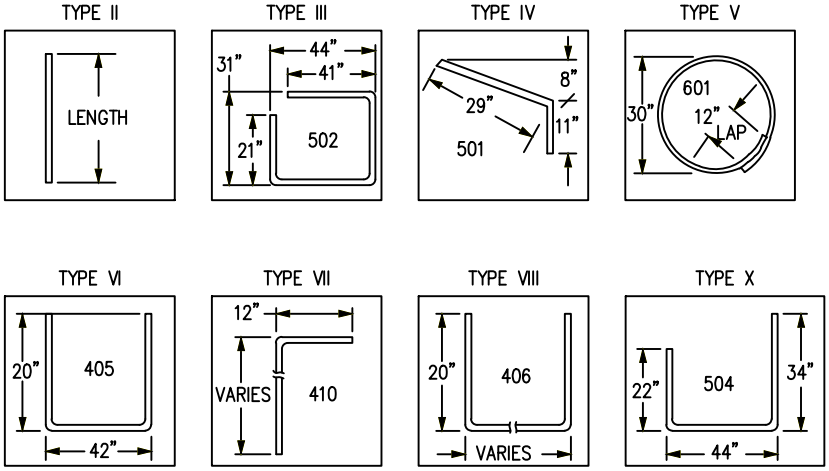

BAR BENDING DIAGRAMS ~ (DIMENSIONS ARE OUT-TO-OUT OF BAR)

09/03/2024	city of PUEBLO colorado	INLET, TYPE R (4 OF 4)	SW3.4
01/01/2023		PUBLIC WORKS DEPARTMENT - ENGINEERING DIVISION 211 EAST "D" ST. PUEBLO, CO 81003 (719) 553-2295 PHONE	DRAWN BY: NLS CHECKED BY: JS APPROVED BY: JH
REVISIONS			

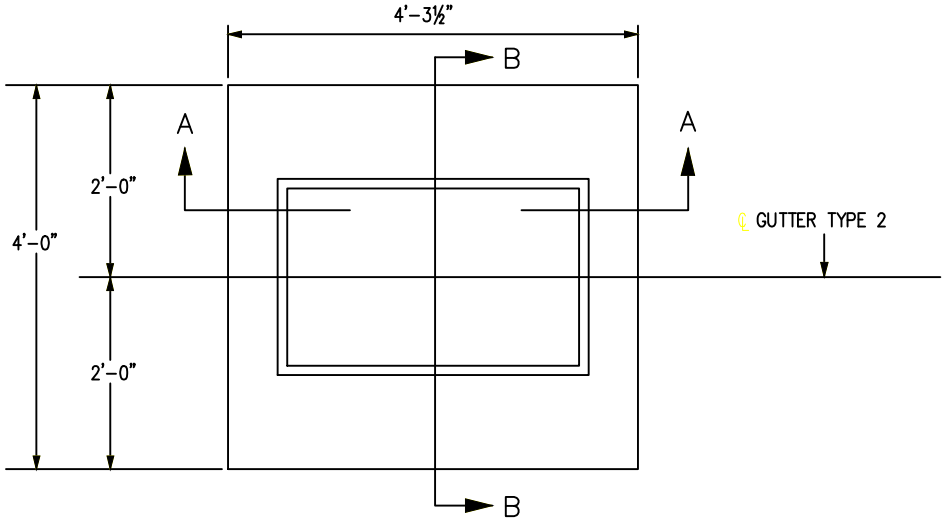

▲ WHEN HMA MATERIAL IS TO EXTEND TO THE EDGE OF THE GRATING FRAME, CONCRETE MAY BE DEPRESSED.

PLAN VIEW
TYPE 13 INLET FOR GUTTER TYPE 2

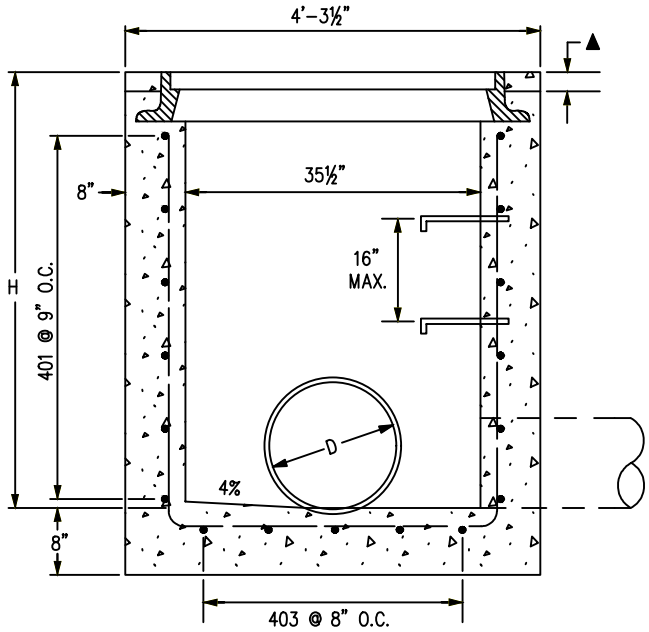

SECTION A–A
D MAX = 30 IN. FOR H >4 FT.

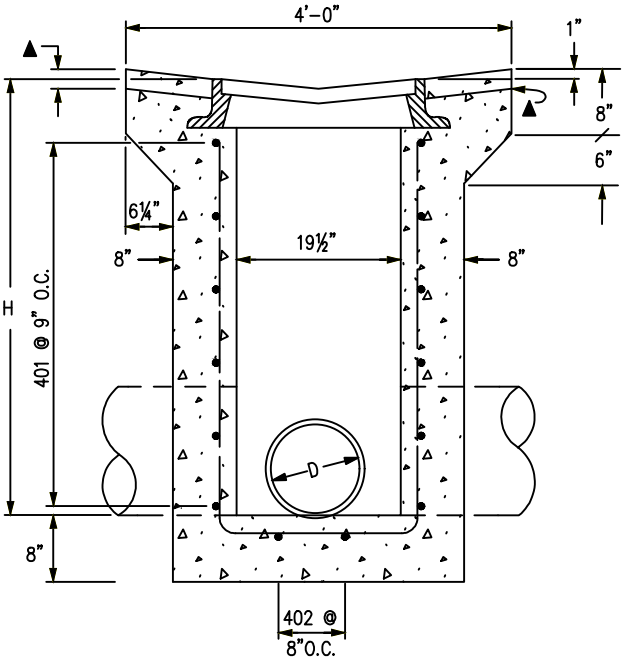

SECTION B–B
D MAX = 18 IN. FOR ALL H

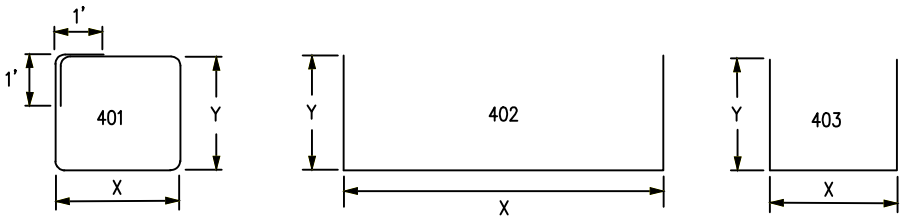

BENDING DIAGRAMS
ALL DIMENSIONS ARE OUT-TO-OUT OF BAR.

09/03/2024 01/01/2023 REVISIONS	city of PUEBLO colorado	INLET, TYPE 13 (1 OF 2) PUBLIC WORKS DEPARTMENT - ENGINEERING DIVISION 211 EAST "D" ST. PUEBLO, CO 81003 (719) 553-2295 PHONE	SW4.1 DRAWN BY: NLS CHECKED BY: JS APPROVED BY: JH

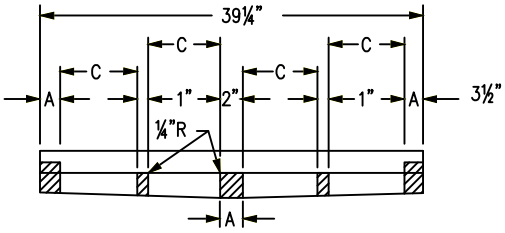

SECTION D–D

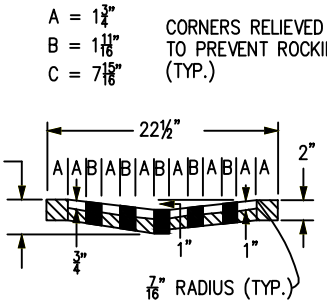

SECTION C–C

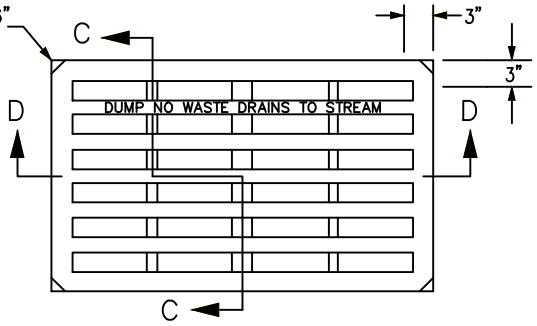

NO. 13 GRATE

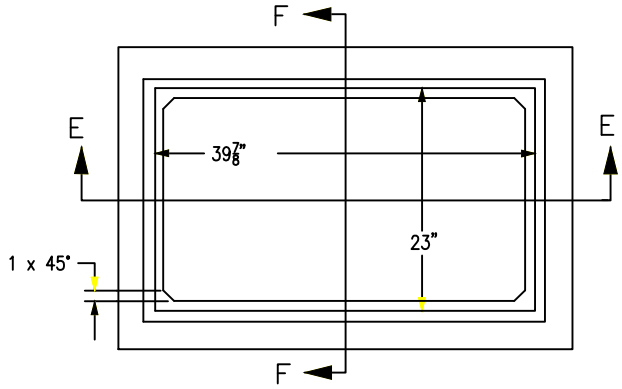

NO. 13 GRATING & FRAMES

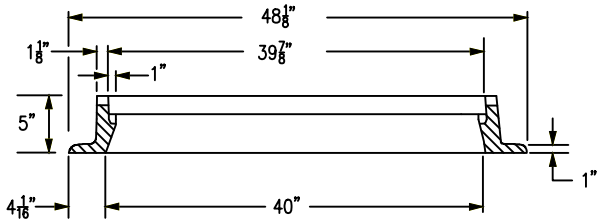

SECTION E–E

APPROXIMATE WEIGHT =590 LBS.

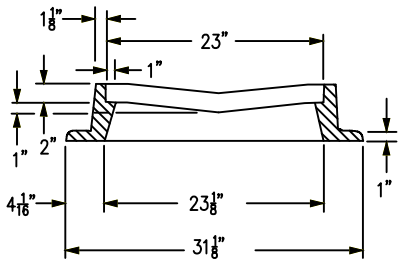

SECTION F–F

H	CONCRETE	REINFORCING STEEL	NO. OF 401 BARS REQ'D.	MAXIMUM PIPE I.D.	
				SEC. A–A	SEC. B–B
	CU. YDS.	θ LB.		IN.	IN.
3'–0"	1.3	72	4	18	18
3'–6"	1.5	76	4	24	18
4'–0"	1.6	90	5	30	18
4'–6"	1.8	104	6	30	18
5'–0"	1.9	109	6	30	18
5'–6"	2.1	122	7	30	18
6'–0"	2.2	136	8	30	18
6'–6"	2.4	141	8	30	18
7'–0"	2.5	154	9	30	18
7'–6"	2.7	168	10	30	18
8'–0"	2.8	173	10	30	18
8'–6"	3.0	187	11	30	18
9'–0"	3.1	200	12	30	18
9'–6"	3.3	205	12	30	18
10'–0"	3.4	219	13	30	18

θ INCLUDES 1% FOR OVERRUN.
NOTE: CONCRETE QUANTITIES INCLUDE VOLUME OCCUPIED BY PIPE.

QUANTITIES FOR ONE INLET

GENERAL NOTES

1. CONCRETE SHALL BE CLASS B. INLET MAY BE CAST–IN–PLACE OR PRECAST.
2. CAST–IN–PLACE CONCRETE WALLS SHALL BE FORMED ON BOTH SIDES.
3. EXPOSED CONCRETE CORNERS SHALL BE CHAMFERED 3/4" OF A INCH.
4. REINFORCING BARS SHALL BE DEFORMED #4 AND SHALL HAVE A 2 INCH MINIMUM CLEARANCE. ALL REINFORCING BARS SHALL BE GRADE 60 AND EPOXY COATED.
5. STEPS SHALL BE PROVIDED WHEN INLET DIMENSION "H" IS EQUAL TO OR GREATER THAN 3 FEET–6 INCHES AND SHALL CONFORM TO AASHTO M 199.
6. ALL GRATES AND FRAMES SHALL BE GRAY OR DUCTILE CAST IRON IN ACCORDANCE WITH SUBSECTION 712.06. GRATES AND FRAMES SHALL BE DESIGNED TO WITHSTAND HS 20 LOADING.
7. STATION POINT IS AT THE CENTER OF THE INLET.
8. GRATE SHALL HAVE "DUMP NO WASTE DRAINS TO STREAM" MESSAGE CAST ON SURFACE.

MARK	NO. REQ'D.	DIMENSIONS		LENGTH
		X	Y	
401	4	3'–6"	2'–2"	13'–4"
402	2	3'–4½"	* 2'–6½"	8'–5½"
403	5	2'–½"	* 2'–7"	7'–2½"

* ADD 6 IN. TO THIS DIMENSION FOR EACH 6 IN. INCREASE OF "H" OVER 3 FT.–0 IN.

BAR LIST FOR H = 3 FT.–0 IN.

09/03/2024	
01/01/2023	
REVISIONS	

city of PUEBLO colorado

INLET, TYPE 13 (2 OF 2)

PUBLIC WORKS DEPARTMENT - ENGINEERING DIVISION
211 EAST "D" ST. PUEBLO, CO 81003
(719) 553-2295 PHONE

SW4.2

DRAWN BY: NLS
CHECKED BY: JS
APPROVED BY: JH

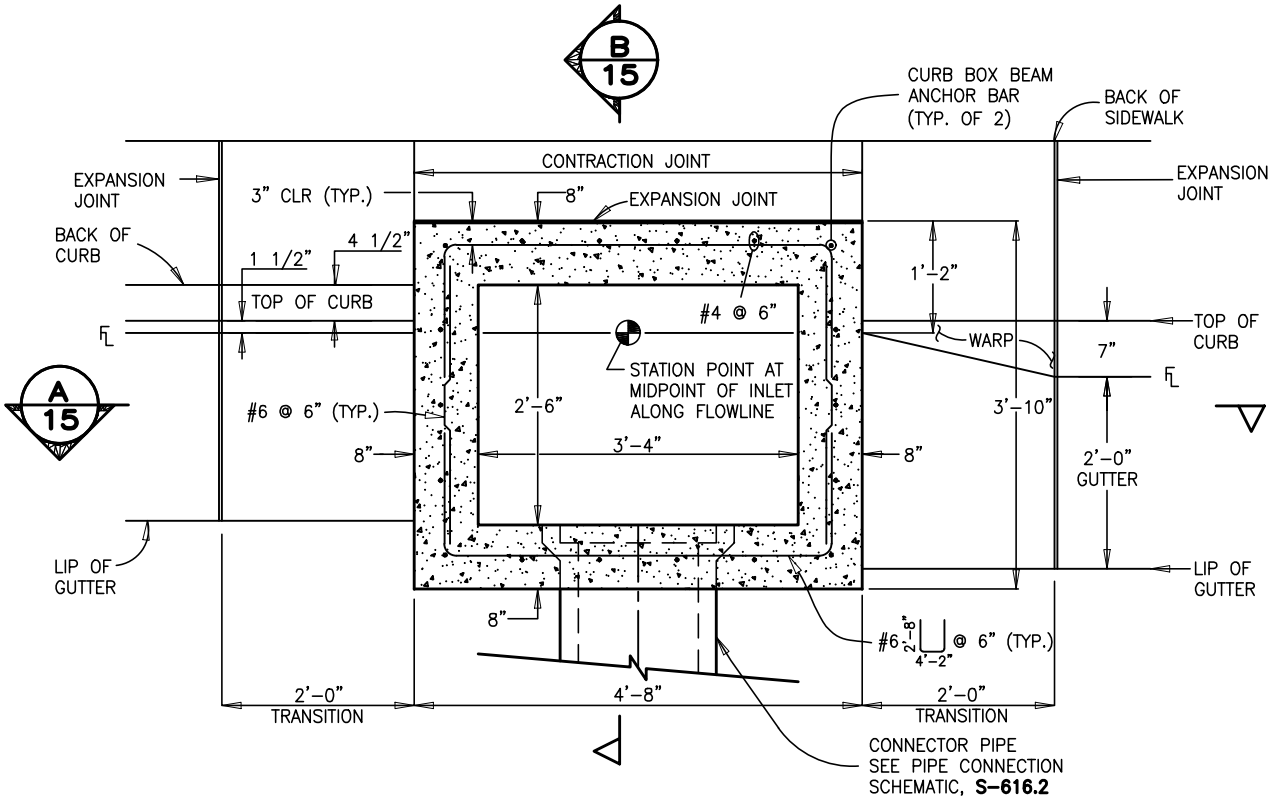

PLAN
NO SCALE

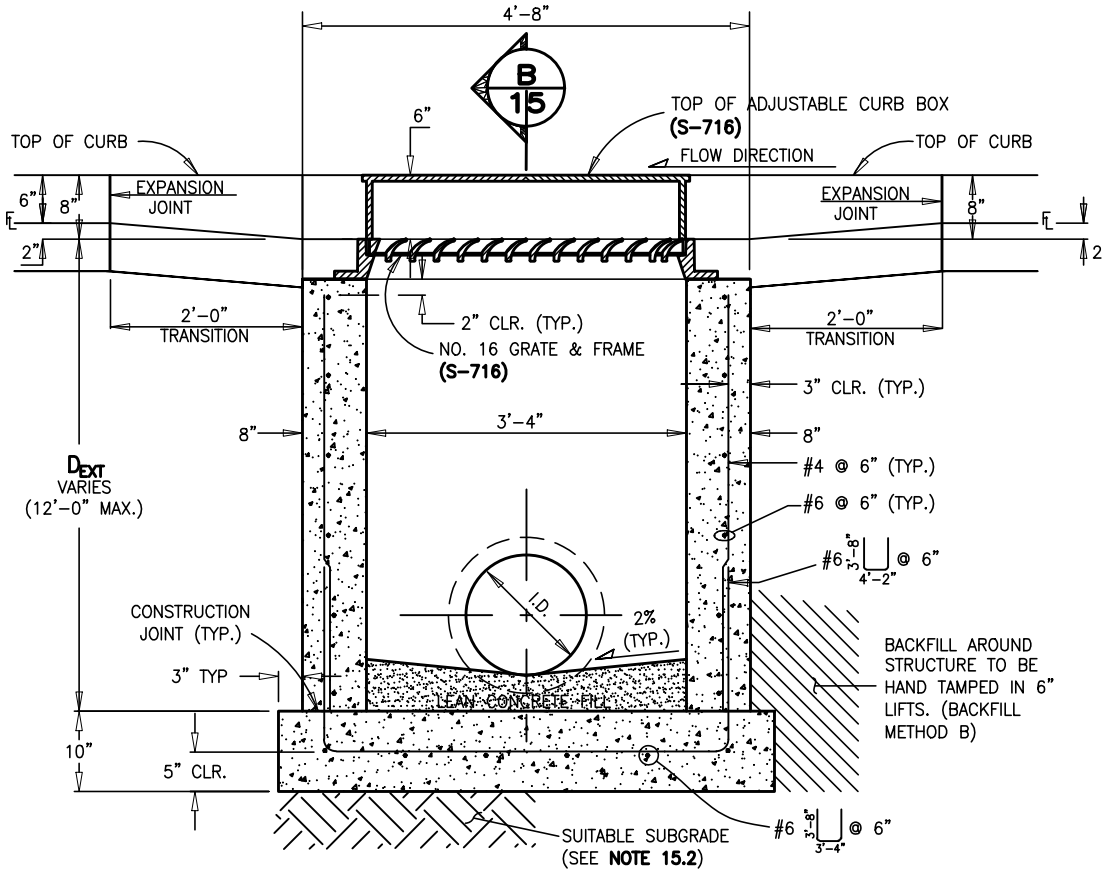

A SECTION
NO SCALE

09/03/2024	city of PUEBLO colorado	INLET, TYPE 16 (1 OF 6)	SW5.1
01/01/2023		PUBLIC WORKS DEPARTMENT - ENGINEERING DIVISION 211 EAST "D" ST. PUEBLO, CO 81003 (719) 553-2295 PHONE	DRAWN BY: NLS CHECKED BY: JS APPROVED BY: JH
REVISIONS			

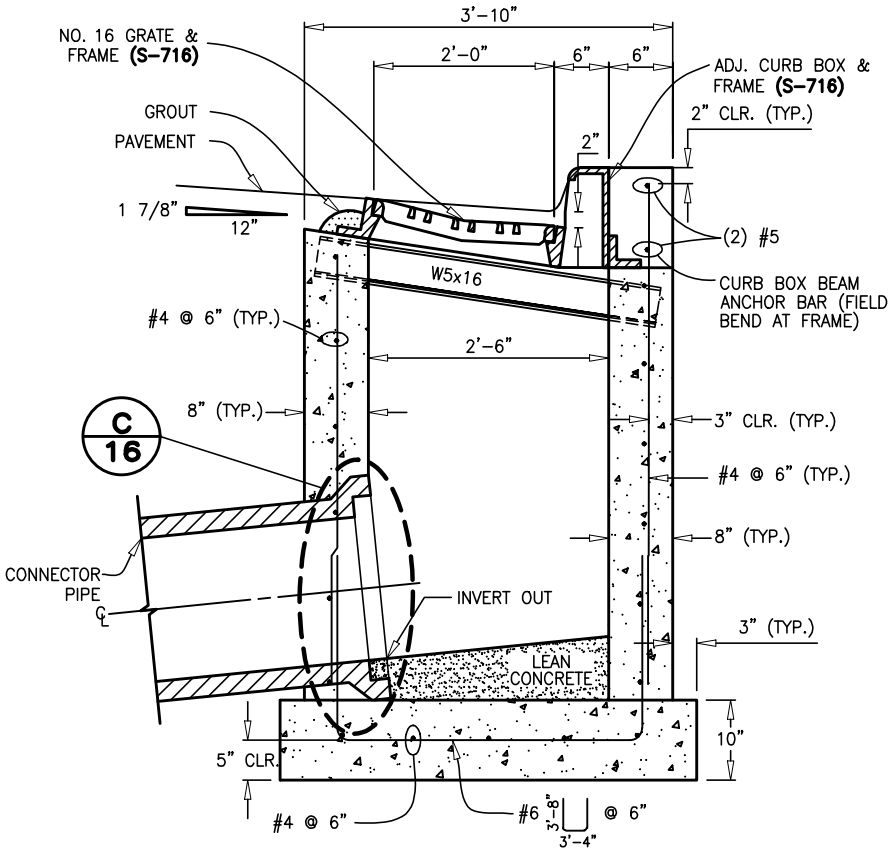

B SECTION (TYPICAL, ALL SIZES)
NO SCALE

SINGLE NUMBER 16 INLET NOTES:

1. FOR PAYMENT PURPOSES, INLET STRUCTURES SHALL ALSO INCLUDE 2'-0" CURB & GUTTER TRANSITION SECTION AT EACH END OF INLET PLUS SIDEWALK SECTIONS WHERE REQUIRED BEHIND INLET STRUCTURE AND TRANSITION SECTIONS.
2. SUB-GRADE SHALL BE 6-12" OF CLASS B BEDDING COMPACTED PER COP STANDARD CONSTRUCTION SPECIFICATIONS, ON SUITABLE, UNDISTURBED MATERIAL. IF SUBGRADE IS UNSUITABLE, THE SUBGRADE SHALL BE OVEREXCAVATED AND STABILIZED WITH CLASS B BEDDING PER COP STANDARD CONSTRUCTION SPECIFICATIONS.
3. FLOOR SLOPE MAY BE POURED MONOLITHIC WITH BASE.
4. Sc = SLOPE OF CONNECTOR = 2% MIN.
5. UNLESS OTHERWISE SPECIFIED ON THE DRAWINGS OR OTHERWISE APPROVED, ALL NO. 16 INLETS SHALL BE CONSTRUCTED WITH AN ADJUSTABLE CAST IRON CURB BOX (S-716).
6. DESIGN CONDITIONS FOR INLET ALLOWS DEPTHS OF 12'-0" (MAX). FOR INLETS MORE THAN 12'-0" FEET IN DEPTH, SHOP DRAWINGS AND DESIGN ANALYSIS SHALL BE SUBMITTED FOR APPROVAL.
7. ALL REINFORCING STEEL SHALL BE ASTM, A-615, GRADE 60 DEFORMED BARS. DIAMETER OF BEND MEASURED ON THE INSIDE OF THE BAR SHALL BE A MINIMUM OF 6 BAR DIAMETER.
8. ALL SHALL CONFORM TO AASHTO LRFD BRIDGE DESIGN SPECIFICATIONS, 8TH EDITION, 2017.
9. NO FORMWORK SHALL WORK REMAIN INSIDE STRUCTURE WHEN COMPLETE.
10. CONCRETE MIX FOR GUTTER AND ANY ADDED STREET PANELS SHALL MEET CLASS 2 REQUIREMENTS FOR SULFATE RESISTANCE IN ACCORDANCE WITH CDOT STANDARD 601.04 ON STREETS WHERE MAGNESIUM CHLORIDE CHEMICAL DEICERS ARE APPLIED. REFER TO COP STANDARD CONSTRUCTION SPECIFICATIONS FOR REQUIREMENTS FOR SULFATE RESISTANCE IN CONCRETE EXPOSED TO EARTH.
11. SPLICING OF REINFORCING STEEL SHALL BE PERMITTED ONLY WHERE DETAILED IN DRAWINGS.
12. INLET WALLS SHALL BE FORMED BOTH INSIDE AND OUTSIDE CASTING OF SIDEWALLS AGAINST EARTH IS NOT PERMITTED.
13. LEAN CONCRETE FILL TO BE F'C = 2000 PSI. INLET STRUCTURE, LID, STREET CURB AND GUTTER, AND PAVEMENT TO BE F'C = 4,500 PSI, MAX W/CM = 0 45 AND AIR ENTRAINED 5% TO 8% F'C = 28 DAY COMPRESSIVE STRENGTH REQUIREMENT FOR MIX DESIGN, FIELD ACCEPTANCE.
14. FOR THROUGH STRUCTURES, BENCHES MUST COME TO TOP OF PIPE.
15. NO CORNER PENETRATIONS ON STRUCTURE.
16. SEE COP STANDARD CONSTRUCTION SPECIFICATIONS STORM INLETS SECTION FOR MORE INFORMATION. USE OF THIS DETAIL WITHOUT SPECIFICATIONS SHALL BE CONSIDERED NON-COMPLIANT.
17. SEE SW5.4 FOR REBAR PLACEMENT AT WALL PENETRATION DETAIL.

09/03/2024	city of PUEBLO colorado	INLET, TYPE 16 (2 OF 6)	SW5.2
01/01/2023		PUBLIC WORKS DEPARTMENT - ENGINEERING DIVISION 211 EAST "D" ST. PUEBLO, CO 81003 (719) 553-2295 PHONE	DRAWN BY: NLS CHECKED BY: JS APPROVED BY: JH
REVISIONS			

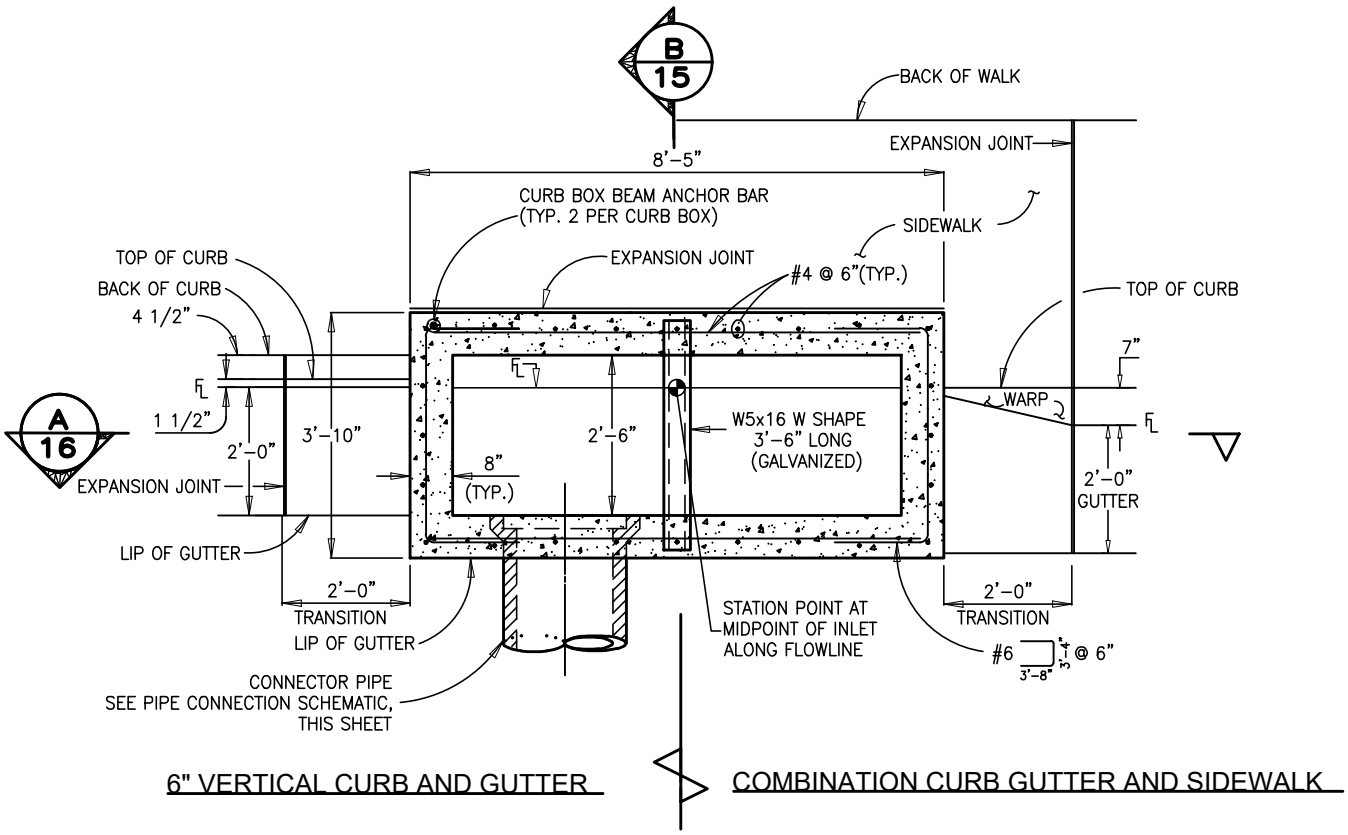

PLAN
NO SCALE

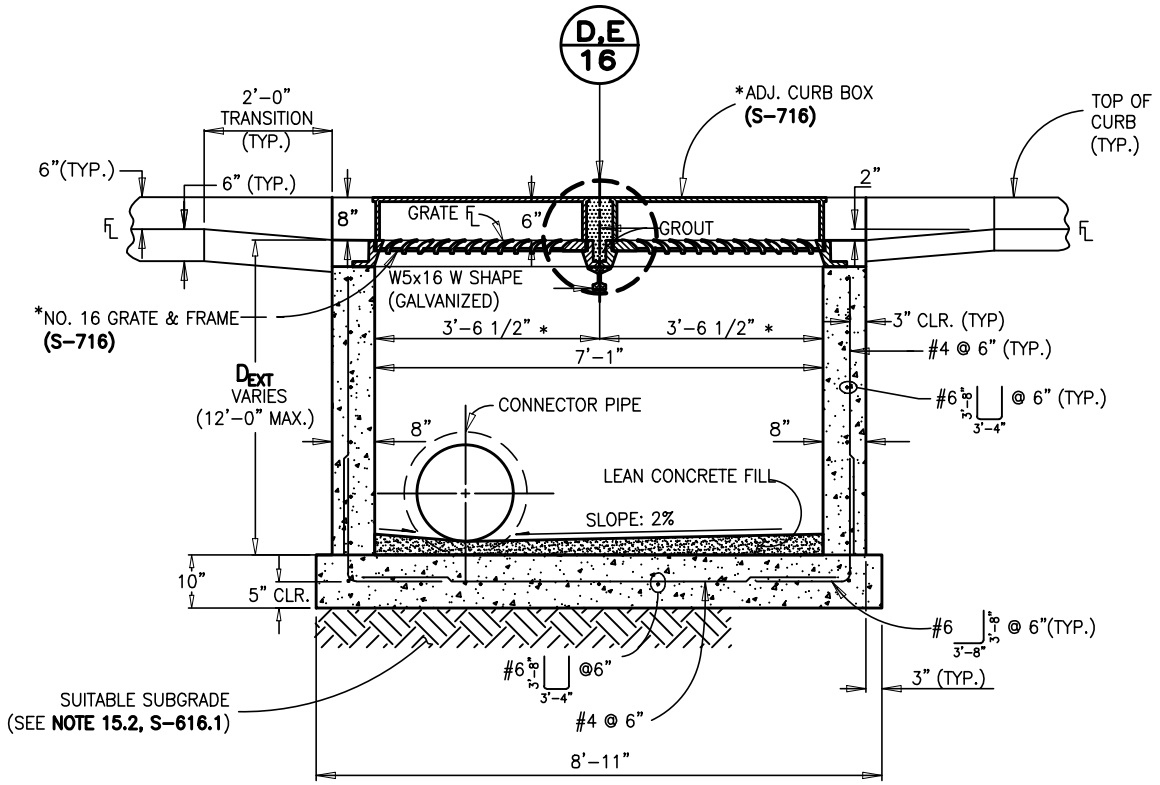

A SECTION
NO SCALE

09/03/2024 01/01/2023 REVISIONS	city of PUEBLO colorado	INLET, TYPE 16 (3 OF 6) PUBLIC WORKS DEPARTMENT - ENGINEERING DIVISION 211 EAST "D" ST. PUEBLO, CO 81003 (719) 553-2295 PHONE	SW5.3 DRAWN BY: NLS CHECKED BY: JS APPROVED BY: JH

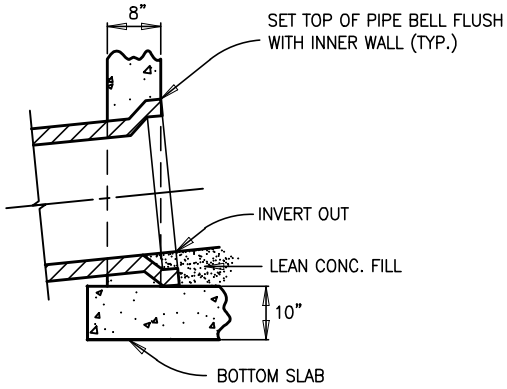

C DETAIL - CONNECTOR OUTLET
NO SCALE

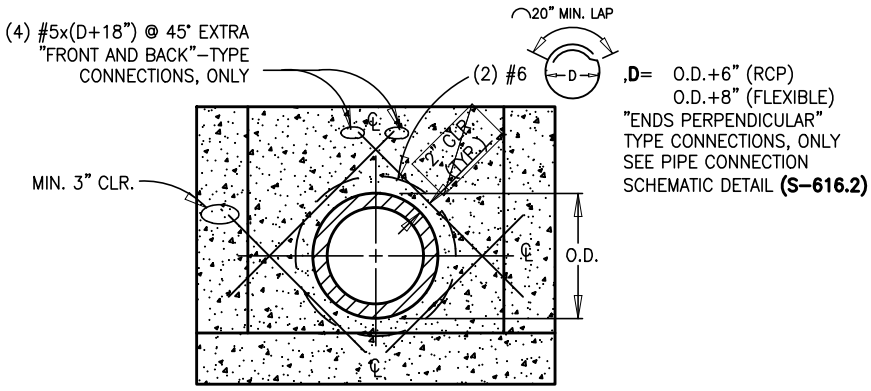

DETAIL - REBAR PLACEMENT AROUND CONNECTOR PIPE
NO SCALE

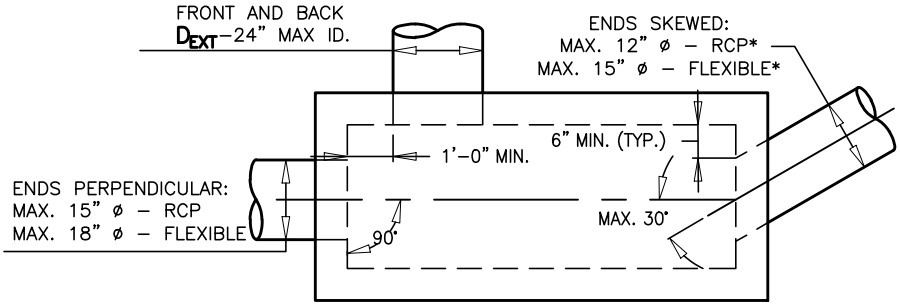

*ANGLED CONNECTIONS REQUIRE CITY APPROVAL.

PIPE CONNECTION SCHEMATIC (NO. 16 INLET)

THIS DIAGRAM IS PROVIDED FOR GENERAL GUIDANCE ONLY. THE DESIGNER IS RESPONSIBLE FOR VERIFYING PROJECT SPECIFIC GEOMETRY.

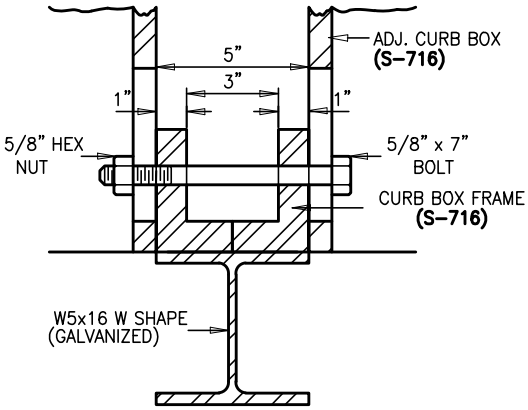

D DETAIL - PLACEMENT OF ADJ. CURB BOX ON SUPPORT RAIL (TYP.)
NO SCALE

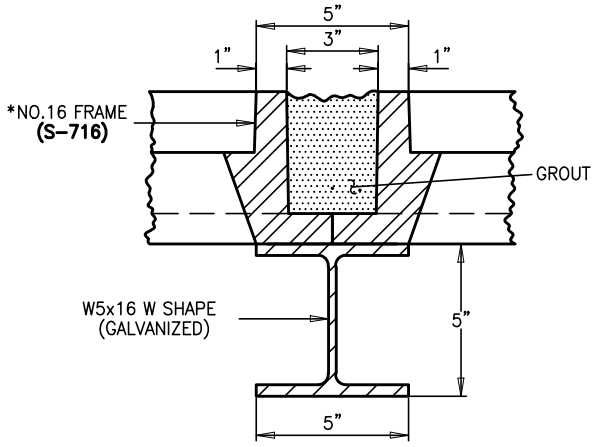

E DETAIL - FRAME PLACEMENT ON SUPPORT RAIL (TYP.)
NO SCALE

DOUBLE NUMBER 16 INLET NOTES:

16.1 SEE DETAIL SPECIFICATIONS SECTION 11.05 STORM INLETS FOR MORE INFORMATION. USE OF THIS DETAIL WITHOUT SPECIFICATIONS SHALL BE CONSIDERED NON–COMPLIANT.

16.2 SEE GENERAL NOTES ON **S–616.1.**

16.3 EXPANSION JOINT MATERIAL SHALL BE PLACED FULL DEPTH OF THE CURB AND GUTTER, SIDEWALK, CONCRETE PAVEMENT, AS APPLICABLE. THE TOP PORTION OF THE JOINT SHALL BE SEALED WITH SILICONE SEALANT.

16.4 SEE **S–616.1** FOR REBAR PLACEMENT AT WALL PENETRATION DETAIL.

* STANDARD DETAIL **S–716** APPLIES TO ALL OF THE GRATE & FRAME GEOMETRIC DIMENSIONS FOR THE DOUBLE NUMBER 16 INLET EXCEPT FOR THE FRAME LENGTH. FRAME FRAME LENGTH SHOULD BE MANUFACTURED FOR THE DIMENSIONS CALLED OUT ON THIS SHEET.

09/03/2024	city of PUEBLO colorado	INLET, TYPE 16 (4 OF 6)	SW5.4
01/01/2023		PUBLIC WORKS DEPARTMENT - ENGINEERING DIVISION 211 EAST "D" ST. PUEBLO, CO 81003 (719) 553-2295 PHONE	DRAWN BY: NLS CHECKED BY: JS APPROVED BY: JH
REVISIONS			

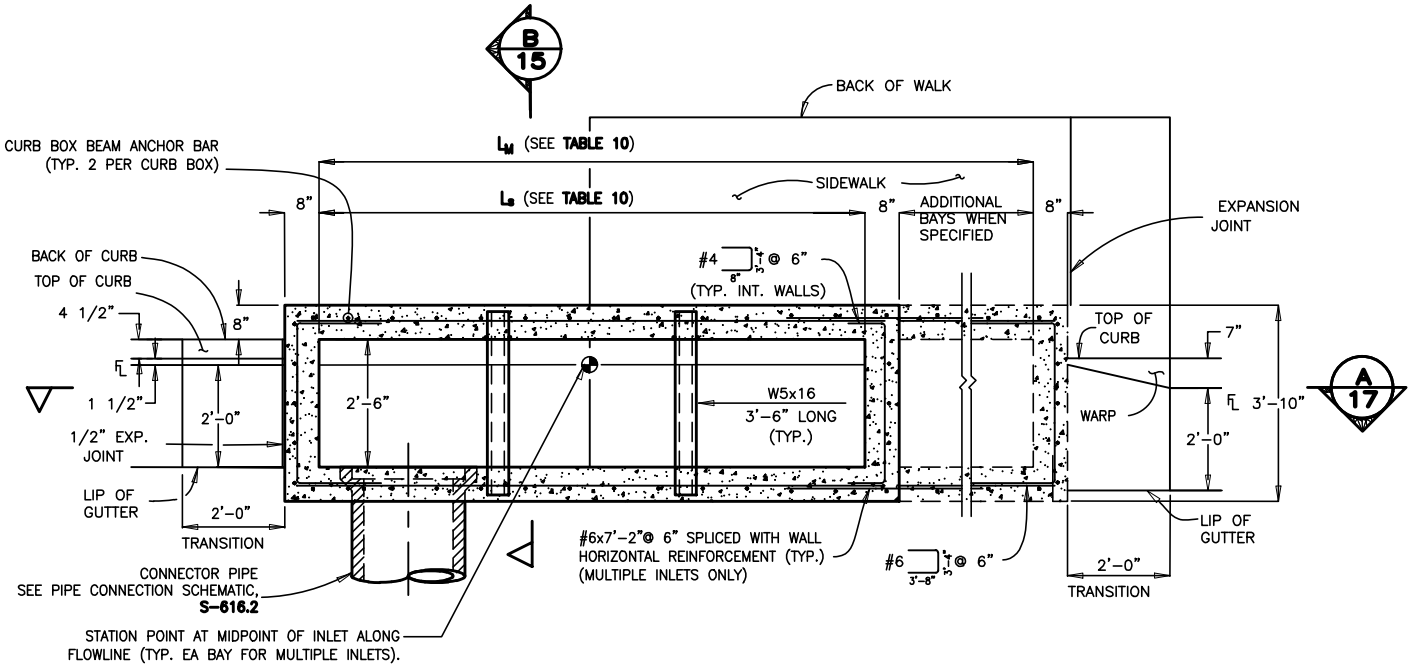

PLAN
NO SCALE

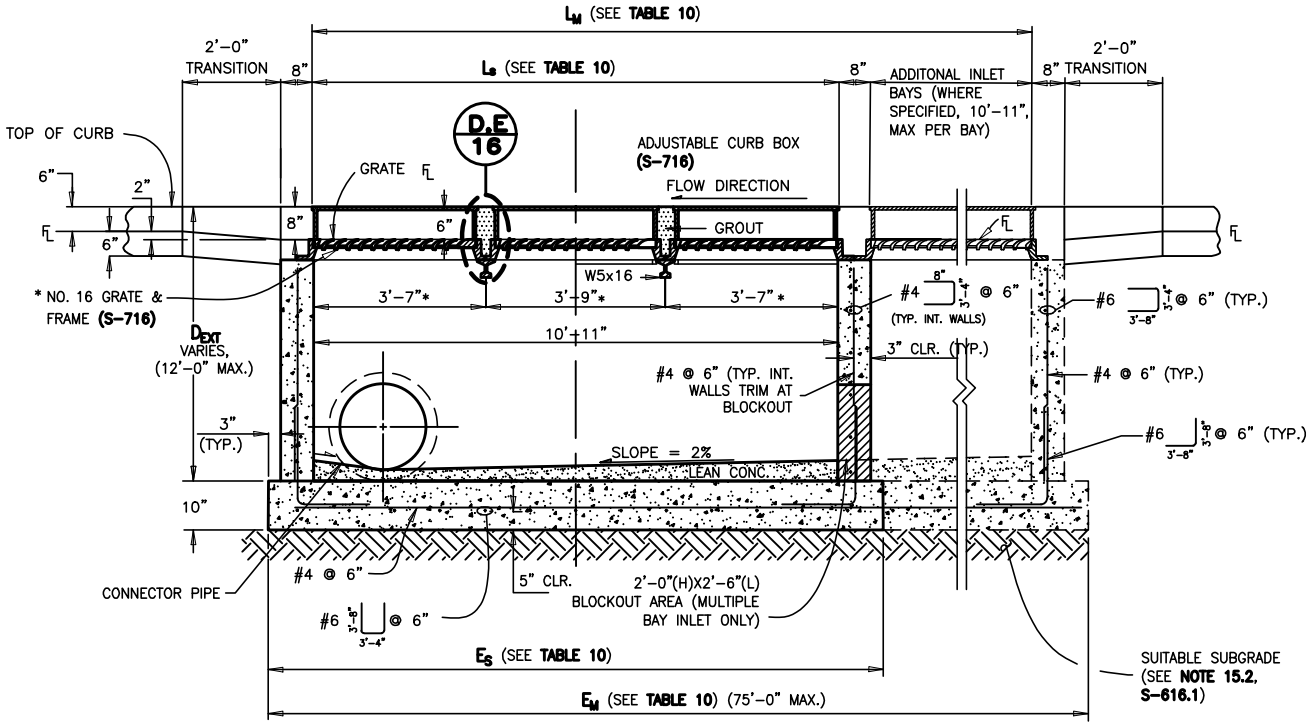

A SECTION
NO SCALE

09/03/2024 01/01/2023 REVISIONS	city of PUEBLO colorado	INLET, TYPE 16 (5 OF 6) PUBLIC WORKS DEPARTMENT - ENGINEERING DIVISION 211 EAST "D" ST. PUEBLO, CO 81003 (719) 553-2295 PHONE	SW5.5 DRAWN BY: NLS CHECKED BY: JS APPROVED BY: JH

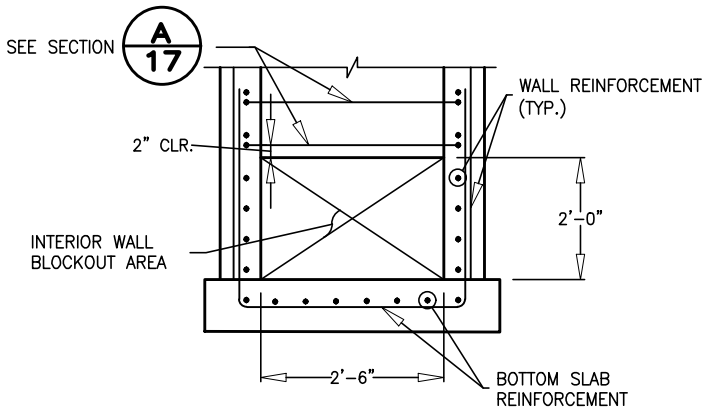

DETAIL - TYPICAL INTERIOR WALL BLOCK-OUT

NO SCALE

TRIPLE NUMBER 16 INLET NOTES:

17.1 SEE WCPM STANDARD CONSTRUCTION SPECIFICATIONS SECTION 11.05 STORM INLETS FOR MORE INFORMATION. USE OF THIS DETAIL WITHOUT SPECIFICATIONS SHALL BE CONSIDERED NON-COMPLIANT.

17.2 SEE GENERAL NOTES ON **S-616.1**

17.3 EXPANSION JOINT MATERIAL SHALL BE PLACED FULL DEPTH OF THE CURB AND GUTTER, SIDEWALK, CONCRETE PAVEMENT, AS APPLICABLE. THE TOP PORTION OF THE JOINT SHALL BE SEALED WITH SILICONE SEALANT.

17.4 SEE **S-616.2** FOR REBAR PLACEMENT AROUND CONNECTOR PIPE.

* STANDARD DETAIL **S-716** APPLIES TO ALL OF THE GRATE & FRAME GEOMETRIC DIMENSIONS FOR THE TRIPLE NUMBER 16 INLET EXCEPT FOR THE FRAME LENGTH. FRAME LENGTH SHOULD BE MANUFACTURED FOR THE DIMENSIONS CALLED OUT ON THIS SHEET.

TABLE 10. NO. 16 TOTAL INLET LENGTH

INLET CONFIGURATION	L_S OR L_M INLET LENGTH	▫ E_S OR E_M TOTAL BOTTOM SLAB LENGTH
TRIPLE NO. 16	10'-11"	12'-9"
NO. 16 3-3-2 (EXAMPLE CONFIGURATION)	10'-11", 10'-11", 7'-1"	32'-1"
NO. 16 __-__-__ (CONFIGURATION TEMPLATE)	L_S, L_S, L_S	=3"+8"+L_S+8"+L_S+8"+L_S+8"+3"

▫ MAX. BOTTOM SLAB LENGTH = 75'-0"

09/03/2024	city of PUEBLO colorado	INLET, TYPE 16 (6 OF 6)	SW5.6
01/01/2023		PUBLIC WORKS DEPARTMENT - ENGINEERING DIVISION 211 EAST "D" ST. PUEBLO, CO 81003 (719) 553-2295 PHONE	DRAWN BY: NLS CHECKED BY: JS APPROVED BY: JH
REVISIONS			

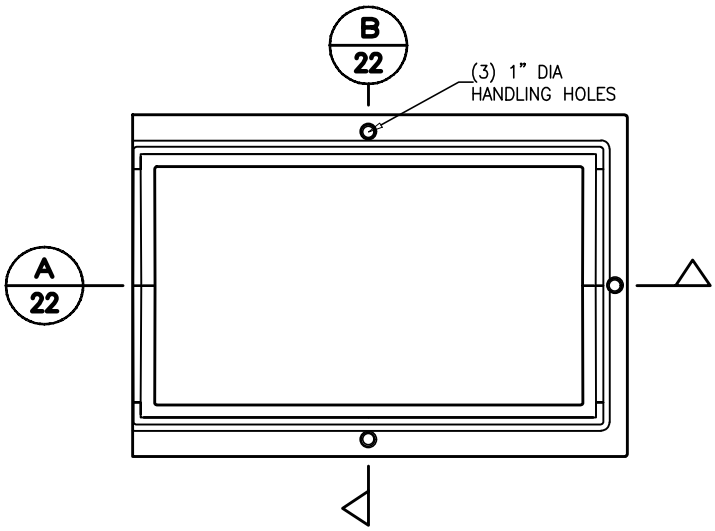

FRAME TOP VIEW

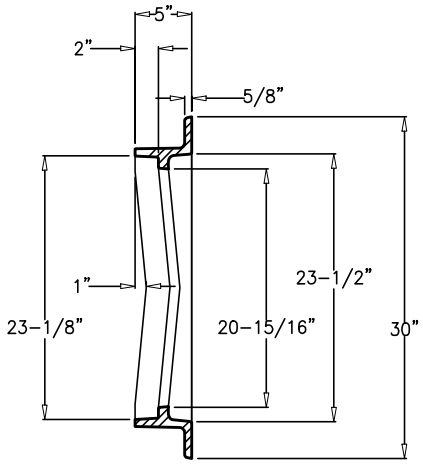

B FRAME SECTION

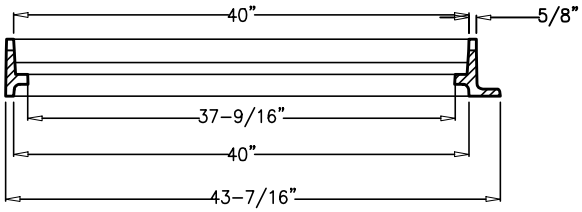

A FRAME SECTION

NO. 16 INLET FRAME - RIGHT OR LEFT

NO SCALE

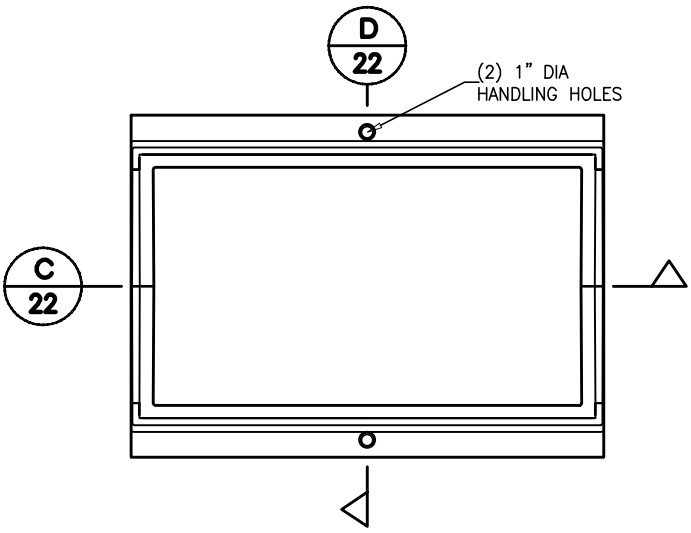

FRAME TOP VIEW

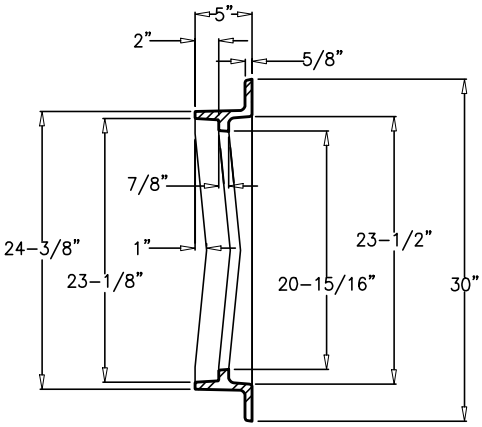

D FRAME SECTION

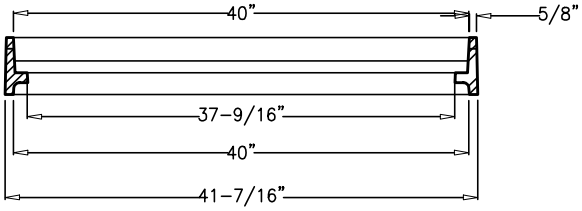

C FRAME SECTION

NO. 16 INLET FRAME - CENTER

NO SCALE

09/03/2024 01/01/2023 REVISIONS	city of PUEBLO colorado	GRATE & FRAME - ADJUSTABLE CURB BOX (1 OF 2) PUBLIC WORKS DEPARTMENT - ENGINEERING DIVISION 211 EAST "D" ST. PUEBLO, CO 81003 (719) 553-2295 PHONE	SW6.1 DRAWN BY: NLS CHECKED BY: JS APPROVED BY: JH

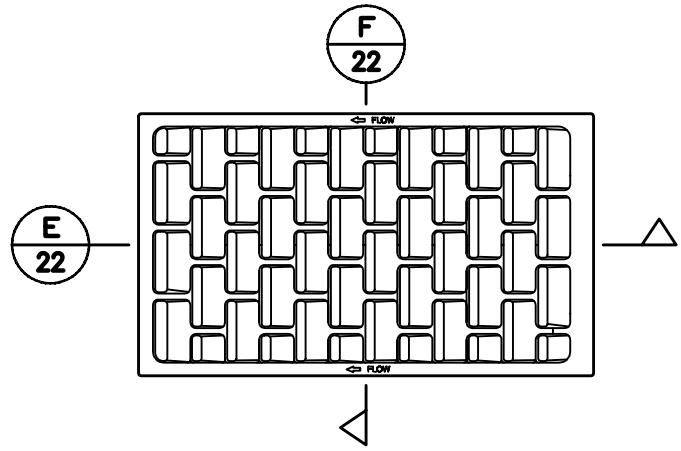

GRATE TOP VIEW

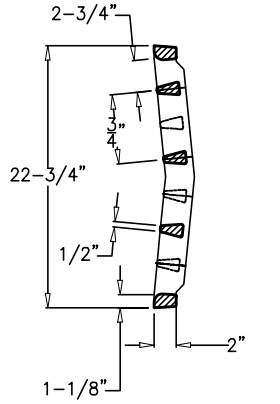

F GRATE SECTION

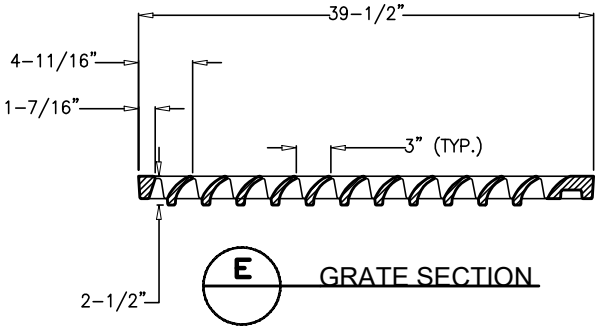

E GRATE SECTION

NO. 16 INLET GRATE
NO SCALE

GRATE & FRAME NOTES:

1. CAST IRON SHALL CONFORM TO ASTM A48 (CLASS 35B, MINIMUM).
2. CASTINGS SHALL COMPLY WITH FEDERAL SPECIFICATION RR-F-621D FOR CASTING PROOF LOADING (HEAVY DUTY).
3. ALL CASTINGS REQUIRE INDIVIDUAL APPROVAL/CERTIFICATION FROM THIS DIVISION.
4. CASTINGS SHALL NOT BE DIPPED OR PAINTED PRIOR TO FINAL INSPECTION, ONCE INDIVIDUAL CASTINGS ARE CHECKED, AND APPROVED BY THE DIVISION FOR PROJECT USAGE, THEY SHALL BE COATED WITH AN APPROVED MATERIAL.

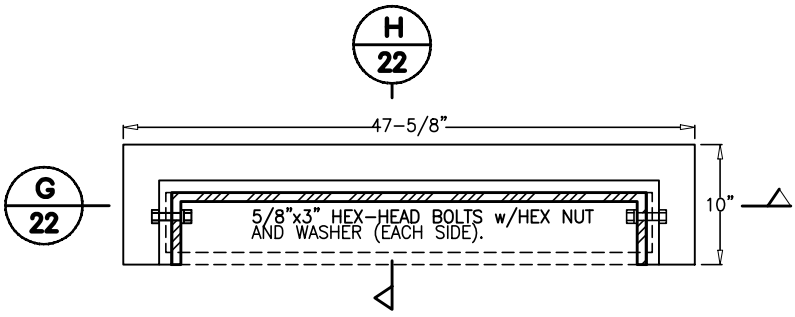

PLAN

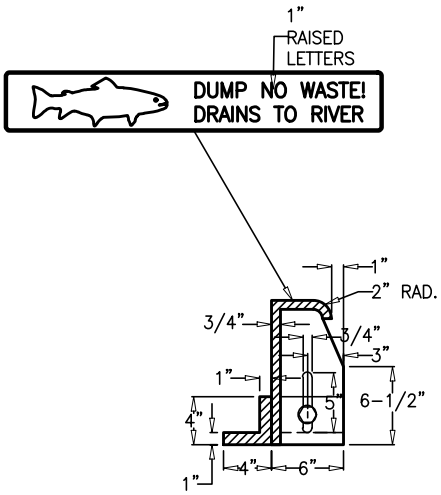

H SECTION

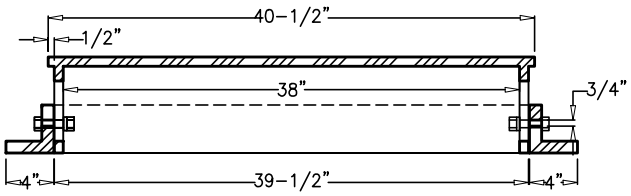

G SECTION

ADJUSTABLE CURB BOX
(MINIMUM CURB OPENING AREA = 150 in2)
NO SCALE

09/03/2024 01/01/2023 REVISIONS	city of PUEBLO colorado	GRATE & FRAME - ADJUSTABLE CURB BOX (2 OF 2) PUBLIC WORKS DEPARTMENT - ENGINEERING DIVISION 211 EAST "D" ST. PUEBLO, CO 81003 (719) 553-2295 PHONE	SW6.2 DRAWN BY: NLS CHECKED BY: JS APPROVED BY: JH

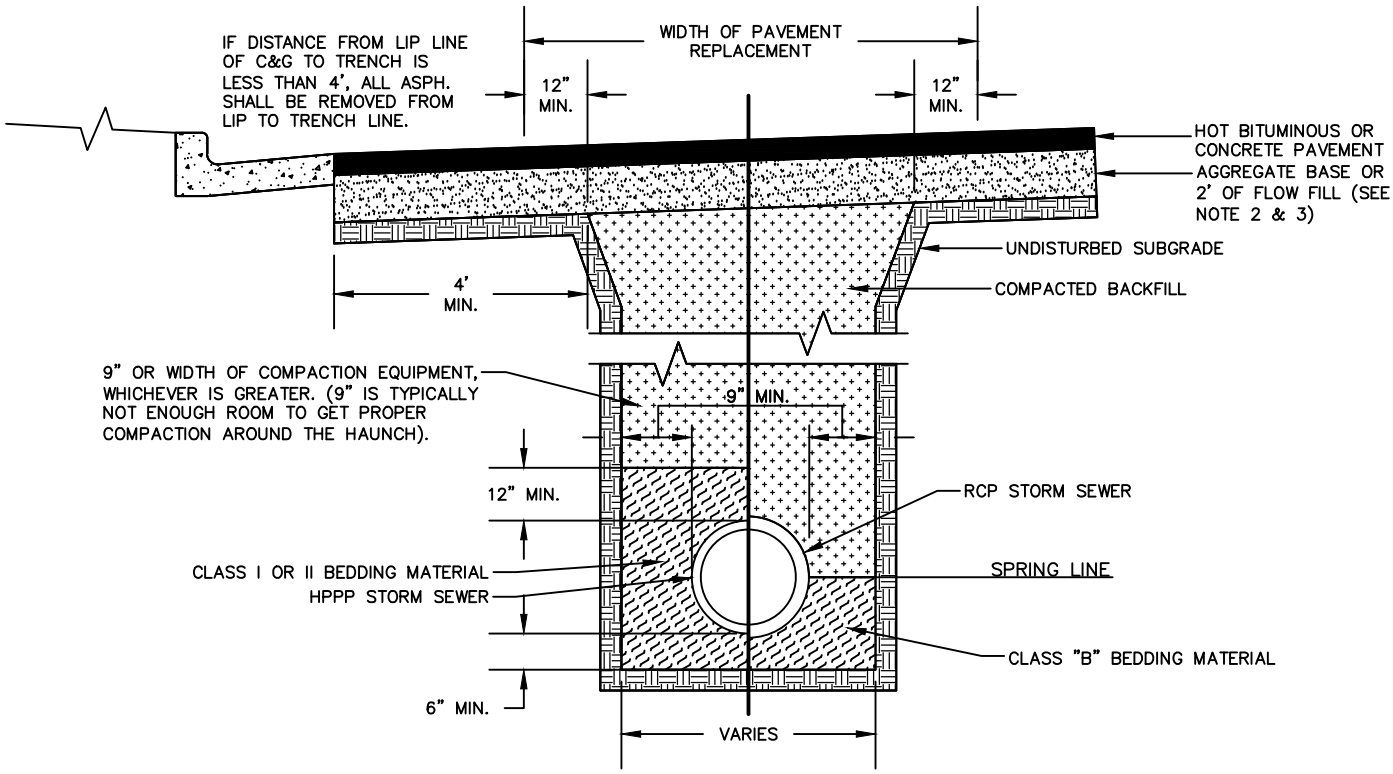

TRENCH DETAIL FOR STORM SEWER
SCALE 1" = 3'-0"

1. ALL TRENCHES SHALL BE ADEQUATELY SUPPORTED AND THE SAFETY OF WORKERS PROVIDED FOR AS REQUIRED BY THE MOST RECENT OCCUPATIONAL SAFETY AND HEALTH ADMINISTRATION (OSHA) "SAFETY AND HEALTH REGULATIONS FOR CONSTRUCTION".

2. NEW STREETS SHALL COMPLY WITH THE CITY OF PUEBLO'S PAVEMENT DESIGN CRITERIA FOR PAVEMENT AND AGGREGATE THICKNESS FOR EACH ROADWAY CLASSIFICATION (TABLE 3–1).

3. EXISTING STREETS SHALL COMPLY THE CITY OF PUEBLO'S PAVEMENT DESIGN CRITERIA FOR PAVEMENT THICKNESS (TABLE 3–1) OR BE EQUAL TO EXISTING PAVEMENT THICKNESS WHICH EVER IS GREATER. 2 FOOT OF FLOWABLE FILL SHALL BE USED IN LIEU OF AGGREGATE BASE.

4. ON ALL STORM SEWER INSTALLATION, COMPACTION TESTS SHALL BE MADE BY AN APPROVED INDEPENDENT TESTING LABORATORY AND SHALL IDENTIFY THE LOCATION AND DEPTH OF THE TEST, THE DATE OF THE TEST, THE MAXIMUM STANDARD PROCTOR DENSITY AND OPTIMUM MOISTURE CONTENT OF THE SOIL AND GIVE THE PERCENT OF COMPACTION AND MOISTURE CONTENT OF THE BACKFILL MATERIAL AT THE TEST LOCATION. COMPACTION TESTS SHALL BE MADE AT A DEPTH OF THREE FEET (3') ABOVE THE TOP OF THE PIPE AND AT TWO FOOT INTERVALS IN DEPTH, UP TO AND INCLUDING THE SURFACE. TESTING SHALL BE DONE AT A MINIMUM OF ONE LOCATION FOR EVERY 250 FEET OF MAIN LINE TRENCH OR FRACTION THEREOF AND AT EVERY MANHOLE OR SIMILAR STRUCTURE. AN ADDITIONAL COMPACTION TEST IS REQUIRED FOR EACH INLET AND LATERAL AND MAY BE TAKEN ALONG THE PIPE OR AR THE INLET AT THE DISCRETION OF THE CITY. SEE 12.3.12 FOR FURTHER GUIDANCE & REQUIREMENTS.

09/03/2024	city of PUEBLO colorado	STORM SEWER TRENCH	SW7
01/01/2023		PUBLIC WORKS DEPARTMENT - ENGINEERING DIVISION 211 EAST "D" ST. PUEBLO, CO 81003 (719) 553-2295 PHONE	DRAWN BY: NLS CHECKED BY: JS APPROVED BY: JH
REVISIONS			

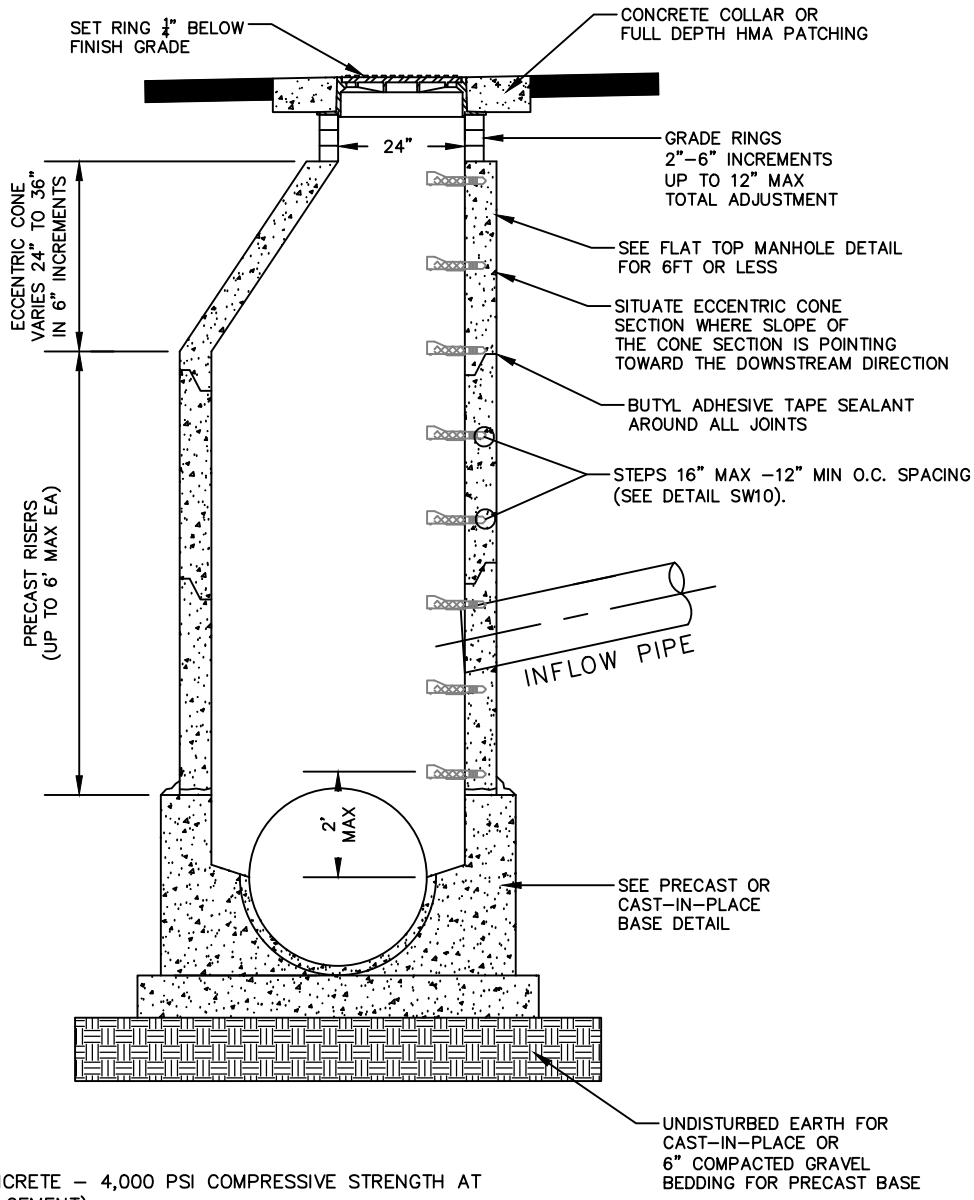

NOTES:

1. DESIGN CRITERIA: CONCRETE – 4,000 PSI COMPRESSIVE STRENGTH AT 28 DAYS (TYPE II–V CEMENT).
2. PROVIDE ECCENTRIC CONES FOR ALL MANHOLES GREATER THAN SIX FEET (6') DEEP, AND FLAT TOPS FOR MANHOLES SIX FEET (6') OR LESS.
3. FOR PIPE INVERT ELEVATIONS SEE PLAN AND PROFILE SHEETS.
4. STEPS SHALL BE REQUIRED WHEN THE MANHOLE DEPTH EXCEEDS 3 FT 6 IN. SEE CITY OF PUEBLO MANHOLE/INLET STEP DETAIL FOR STEP SPECIFICATIONS.
5. MANHOLE STEPS SHALL NOT BE INSTALLED OVER THE FLOW CHANNEL.
6. FOR DEPTHS GREATER THAN 20' (RIM TO INVERT) SHOP DRAWINGS, CALCULATIONS OF WALLS, TOP AND BOTTOM SLABS SHALL BE SUBMITTED.
7. DESIGN ENGINEER OR PROJECT ENGINEER MAY INCREASE MANHOLE SIZE FOR SPECIAL DESIGN CONSIDERATIONS.
8. ALL JOINTS IN THE MANHOLE BARREL, CONE, GRADE ADJUSTMENT RINGS, AND FLAT TOP SECTIONS SHALL BE SEALED WITH A PREFORMED FLEXIBLE PLASTIC SEALING COMPOUND CONFORMING TO FEDERAL SPECIFICATION SS–S–00210 (GSA–FS6).
9. ALL PIPE PENETRATIONS SHALL BE AN APPROVED FLEXIBLE CONNECTION, MECHANICAL SEAL, WATER STOP, OR NON–SHRINK GROUT TO REDUCE INFILTRATION AND EXFILTRATION. WHEN GROUTING IS NECESSARY AT A WATER STOP CONNECTION, NON–SHRINK GROUT SHALL SHALL BE USED.

STORM DRAIN DIAMETER (INCHES)	MANHOLE DIAMTER (FEET)
15 TO 18	4
>18 TO <42	5
42 TO 54	6
LARGER THAN 54	APPROPRIATE MANHOLE SIZE FROM CDOT STANDARD PLAN NO. M–604–20

MANHOLE DROP REQUIREMENT	
HORIZONTAL DEFLECTION ANGLE OF SEWER PIPE AT MANHOLE	MINIMUM DROP(FT)
0°	0.10
0° & 45°	0.20
45°TO 90°	0.30

09/03/2024	city of PUEBLO colorado	STORM MANHOLE	SW8
01/01/2023		PUBLIC WORKS DEPARTMENT - ENGINEERING DIVISION 211 EAST "D" ST. PUEBLO, CO 81003 (719) 553-2295 PHONE	DRAWN BY: NLS CHECKED BY: JS APPROVED BY: JH
REVISIONS			

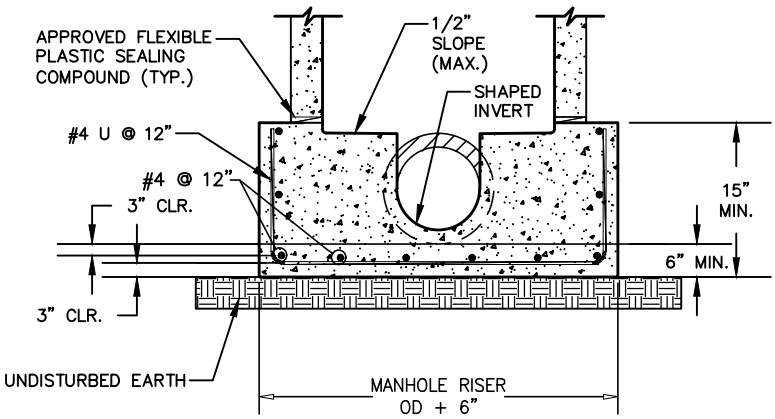

CAST-IN-PLACE MANHOLE BASE
NO SCALE

CAST-IN-PLACE MANHOLE BASE NOTES:

1. GROUTED FLOW CHANNELS AND INVERTS MAY BE FORMED BY SHAPING WITH LEAN CONCRETE (f'c=2,000 PSI MIN.), ALL OTHER CONCRETE SHALL BE MIN f'c=4,000 PSI.
2. REINFORCING IS REQUIRED FOR ALL MANHOLE BASES.
3. SLOPE MANHOLE BENCH 1/2" MAXIMUM TOWARD FLOW CHANNEL.
4. ALL MANHOLES TO BE PLACED ON SUITABLE SUBGRADE MATERIAL. IF SUBGRADE CONDITIONS WARRANT, UNSUITABLE FOUNDATION MATERIAL SHALL BE OVEREXCAVATED, & SELECT SUBGRADE WILL BE PLACED.
5. CONCRETE TO CONCRETE DONE WITHOUT THE PLASTIC SEALING COMPOUND FOR STORM SEWER WILL BE AT THE DISCRETION OF THE CITY.
6. ALL PRECAST RISER SECTIONS, CONES, GRADE RINGS, ETC. SHALL CONFORM TO THE LATEST REVISION OF ASTM C-478, STANDARD SPECIFICATIONS FOR CIRCULAR PRECAST REINFORCED CONCRETE MANHOLE SECTIONS.
7. NO MODIFICATIONS TO A CAST-IN-PLACE MANHOLE WILL BE ACCEPTED ONCE CAST.

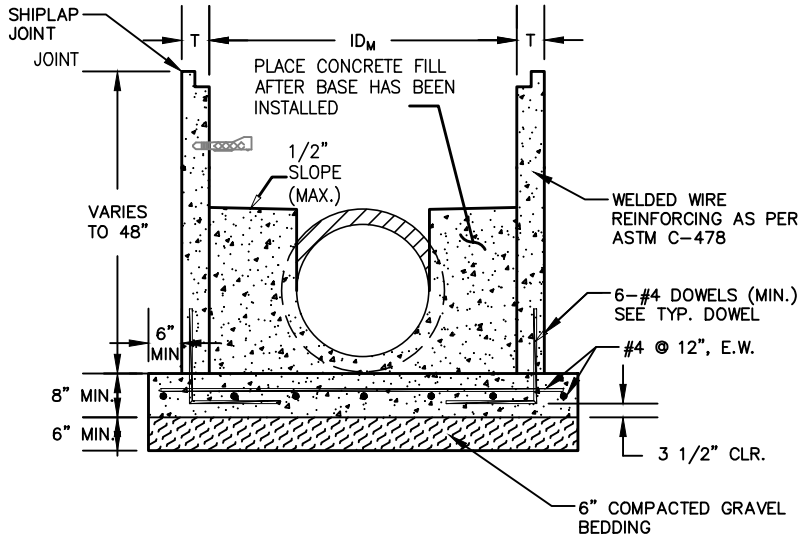

PRECAST MANHOLE BASE
NO SCALE

PRECAST MANHOLE BASE NOTES:

1. THE BASE SLAB SHALL BE POURED MONOLITHICALLY WITH BOTTOM RISER SECTION.
2. PRECAST MANHOLE BASES SHALL FIT THE CONDITIONS AND LOCATIONS FOR WHICH THEY ARE INTENDED WITHOUT ANY FIELD MODIFICATIONS. ANY MANHOLE BASE WHICH REQUIRES FIELD CUTTING OR MODIFICATION IN ORDER TO FIT THE LOCATIONS INTENDED SHALL BE REJECTED BY THE CITY AND REMOVED AT NO COST TO THE CITY.
3. PRECAST MANHOLES CANNOT BE SHIPPED PRIOR TO 5 DAYS POST CASTING, AND CANNOT BE INSTALLED PRIOR TO 7 DAYS POST CASTING.

	city of PUEBLO colorado	STORM MANHOLE BASES	SW9
09/03/2024		PUBLIC WORKS DEPARTMENT - ENGINEERING DIVISION 211 EAST "D" ST. PUEBLO, CO 81003 (719) 553-2295 PHONE	DRAWN BY: NLS
01/01/2023			CHECKED BY: JS
REVISIONS			APPROVED BY: JH

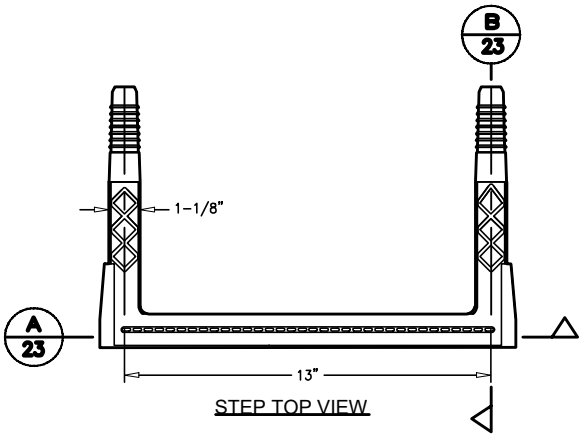

STEP TOP VIEW

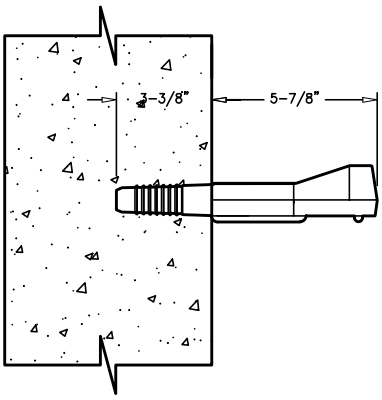

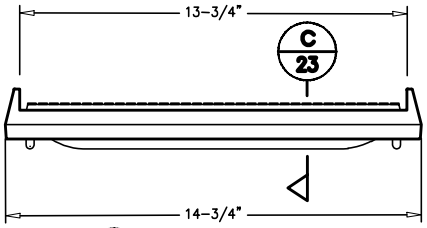

A STEP SECTION

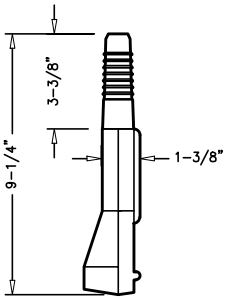

B STEP SECTION

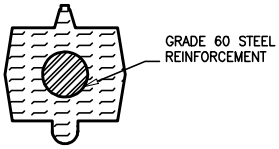

C STEP CROSS-SECTION

NOTES:

1. ASTM SPECIFICATIONS:
   1.1. ASTM C-478 (MANHOLE STEPS AND LADDERS)
   1.2. ASTM A-615 GRADE 60 (STEEL REBAR)
   1.3. ASTM 4101 (POLYPROPYLENE)

2. STEPS SHALL BE INSTALLED BY THE "PRESS-FIT" METHOD UTILIZING A SPECIALLY TAPERED PIN TO FORM THE INSERT HOLE AS SHOWN. FOLLOWING MANUFACTURER'S RECOMMENDED PROCEDURE AND SHALL NOT BE GROUTED IN PLACE.

3. INSTALLED STEPS SHALL BE CAPABLE OF WITHSTANDING A PULL OUT FORCE OF 2500 LB. PER LEG FOR A MINIMUM PERIOD OF TWO MINUTES.

4. PINS MUST BE SMOOTH AND CONTINUOUSLY TAPERED. W.M.D. INSTALLATIONS REQUIRE A MATCHED COMBINATION OF A TAPERED INSERT PIN AND MANHOLE STEP, AS RECOMMENDED OR REQUIRE BY SPECIFIC MANUFACTURE OF THE STEP TO BE USED.

5. THIS STEP CAN ALSO BE USED IN TOE POCKET INSTALLATIONS PROVIDED 5" TOE CLEARANCE IS ALLOWED. MANHOLE STEPS SHALL NOT BE INSTALLED OVER THE FLOW CHANNEL. THEY SHALL BE PLACED 12" MINIMUM OR 16" MAXIMUM IN STRAIGHT VERTICAL ALIGNMENT WITH THE BOTTOM STEP 8" ABOVE THE BENCH MINIMUM.

* STORM MANHOLES ONLY. NO STEPS IN SANITARY SEWER MANHOLES.

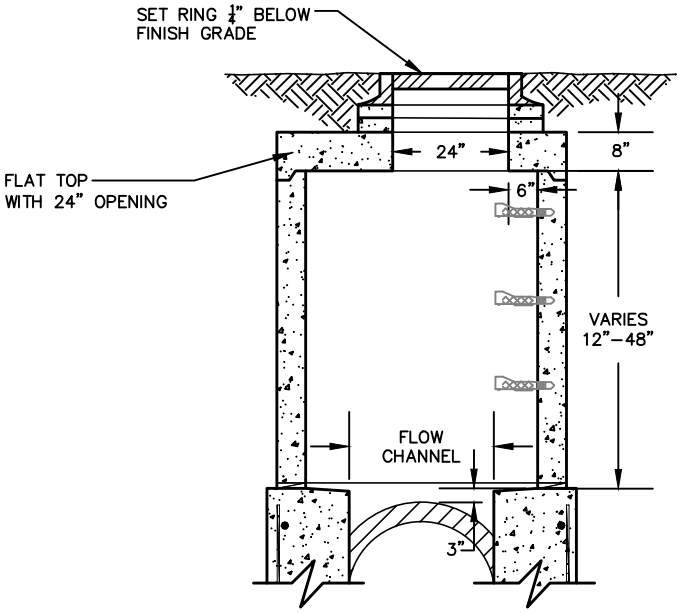

FLAT TOP WITH ECCENTRIC OPENING
NO SCALE

09/03/2024	city of PUEBLO colorado	MANHOLE STEPS & FLAT TOP SECTION	SW10
01/01/2023		PUBLIC WORKS DEPARTMENT - ENGINEERING DIVISION 211 EAST "D" ST. PUEBLO, CO 81003 (719) 553-2295 PHONE	DRAWN BY: NLS CHECKED BY: JS APPROVED BY: JH
REVISIONS			

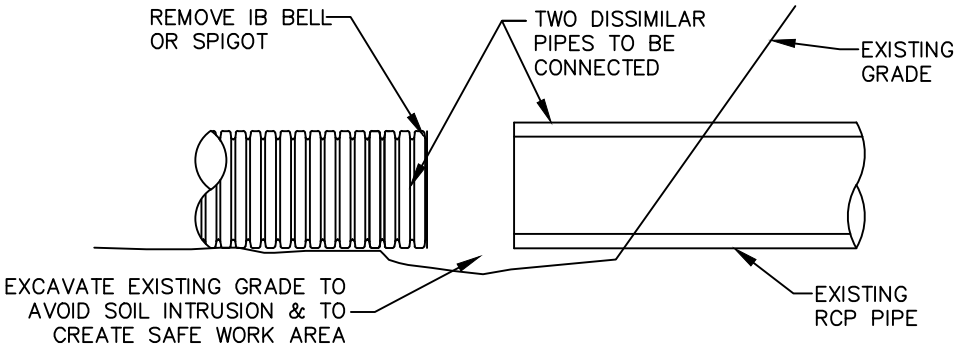

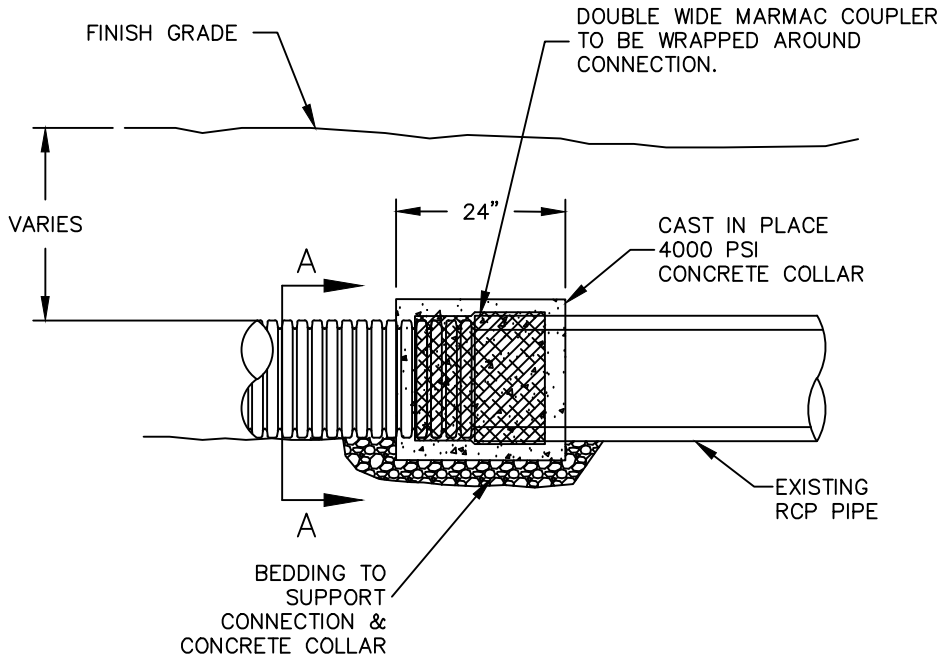

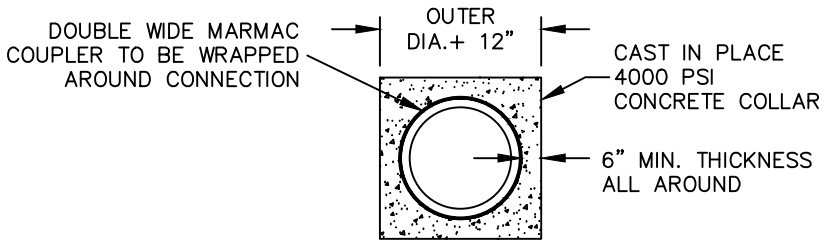

SECTION "A–A"

DISSIMILAR PIPE CONNECTION DETAIL

09/03/2024 01/01/2023 REVISIONS	city of PUEBLO colorado	STORM PIPE DISSIMILAR CONNECTION PUBLIC WORKS DEPARTMENT - ENGINEERING DIVISION 211 EAST "D" ST. PUEBLO, CO 81003 (719) 553-2295 PHONE	SW11 DRAWN BY: NLS CHECKED BY: JS APPROVED BY: JH

Docusign Envelope ID: 1DDD049B-FCF9-4559-95A9-751907C4636E

Background Paper for Proposed Resolution

COUNCIL MEETING DATE: January 12, 2026

TO: President Mark Aliff and Members of City Council

CC: Mayor Heather Graham

VIA: Marisa Stoller, City Clerk

FROM: Alyssa Parga, Secretary to the Mayor

SUBJECT: A RESOLUTION CONFIRMING THE APPOINTMENT BY THE MAYOR OF CRYSTAL ESTRADA AND CORINNE KOEHLER TO COMPLETE A FIVE-YEAR TERM ON THE PUEBLO URBAN RENEWAL AUTHORITY OF THE CITY OF PUEBLO

SUMMARY:

This Resolution confirms the appointment by the Mayor of Crystal Estrada and Corinne Koehler to complete a five-year term on the Urban Renewal Authority of the City of Pueblo.

PREVIOUS COUNCIL ACTION:

The Mayor has made appointments to boards and commissions selecting individuals to serve terms which expire during a particular calendar year and presented them to Council for approval.

BACKGROUND:

Due to the vacancies left by Ralph Williams and Melissa Nereson, there are two appointments available on the Urban Renewal Authority of the City of Pueblo. The Mayor interviewed eleven candidates and appointed Ms. Estrada and Ms. Koehler.

FINANCIAL IMPLICATIONS:

This is a volunteer committee and members serve without compensation.

BOARD/COMMISSION RECOMMENDATION:

N/A

Docusign Envelope ID: 1DDD049B-FCF9-4559-95A9-751907C4636E

STAKEHOLDER PROCESS:

N/A

ALTERNATIVES:

Remove from the agenda and re-advertise for additional applications.

RECOMMENDATION:

Approval of the Resolution.

ATTACHMENTS:

None

Docusign Envelope ID: 1DDD049B-FCF9-4559-95A9-751907C4636E

RESOLUTION NO. 15820

A RESOLUTION CONFIRMING THE APPOINTMENT BY THE MAYOR OF CRYSTAL ESTRADA AND CORINNE KOEHLER TO COMPLETE A FIVE-YEAR TERM ON THE PUEBLO URBAN RENEWAL AUTHORITY OF THE CITY OF PUEBLO

WHEREAS, Mayor Heather Graham has requested confirmation by the City Council of her appointment of Crystal Estrada and Corinne Koehler to the Pueblo Urban Renewal Authority; NOW, THEREFORE,

BE IT RESOLVED BY THE CITY COUNCIL OF PUEBLO, that

SECTION 1.

The appointment by the Mayor of Crystal Estrada to the Pueblo Urban Renewal Authority to complete a five-year term expiring February 1, 2027, shall be and is hereby confirmed by the City Council.

SECTION 2.

The appointment by the Mayor of Corinne Koehler to the Pueblo Urban Renewal Authority to complete a five-year term expiring February 1, 2028, shall be and is hereby confirmed by the City Council.

SECTION 3.

The officers and staff of the City are authorized to perform any and all acts consistent with this Resolution to implement the appointments described herein.

SECTION 4.

This Resolution shall become effective on the date of final action by the Mayor and City Council.

INTRODUCED: November 11, 2024

BY: Regina Maestri
MEMBER OF CITY COUNCIL

APPROVED: DocuSigned by: Mark Aliff B7A4F51823AB462...
PRESIDENT OF CITY COUNCIL

ATTESTED BY: DocuSigned by: 7C02FBDFEC3D43C...
CITY CLERK

Docusign Envelope ID: 1DDD049B-FCF9-4559-95A9-751907C4636E

City Clerk's Office Item # M17

Background Paper for Proposed Resolution

COUNCIL MEETING DATE: November 11, 2024

TO: President Mark Aliff and Members of City Council

CC: Mayor Heather Graham

VIA: Marisa Stoller, City Clerk

FROM: Andrew Hayes, Public Works Director

SUBJECT: A RESOLUTION APPROVING PAYMENT IN THE AMOUNT OF $80,000 FROM PROJECT ACCOUNT CI2113 - AMERICAN RESCUE PLAN ACT FOR CITY-WIDE TRASH REMOVAL PROJECTS AS AUTHORIZED BY SECTION 603(C)(1)(C) OF THE AMERICAN RESCUE PLAN ACT AND U.S. TREASURY FINAL RULE 31 CFR §35.6

SUMMARY:

This Resolution authorizes payment in the amount of $80,000.00 from Project Account CI2113 American Rescue Plan Act ("ARPA") for purchases related to various cleanup activities and events within the City of Pueblo. This payment is authorized by section 603 (c)(1)(C) of the American Rescue Plan Act and U.S. Treasury Final Rule 31 CFR §35.6.

PREVIOUS COUNCIL ACTION:

By Ordinance No. 9931, approved on May 17, 2021, the City Council established Project Account CI2113 and budgeted and appropriated up to $36.7 million in funds which were expected to be distributed to the City from ARPA for covered costs and eligible expenses to be incurred during the period which began on March 3, 2021, until December 31, 2024 (to be expended by December 31, 2026).

BACKGROUND:

ARPA authorized a revenue replacement calculation that would allow state and local governments to use a portion of ARPA allocation for government services. The City of Pueblo has calculated lost revenue of $9,409,304.

The City has previously allocated $300,000 toward cleanup activities and events around the City. Those funds have since been expended and an additional $80,000 is needed to cover expenses related to ongoing cleanup work within the City.

Docusign Envelope ID: 1DDD049B-FCF9-4559-95A9-751907C4636E

FINANCIAL IMPLICATIONS:

Funding in the amount of $80,000.00 will be paid out of Project Account CI2113 - American Rescue Plan.

BOARD/COMMISSION RECOMMENDATION:

Not applicable to this Resolution.

STAKEHOLDER PROCESS:

Not applicable to this Resolution.

ALTERNATIVES:

City Council could decide not to authorize payment of the funds and forego additional cleanup work.

RECOMMENDATION:

Approval of the Resolution.

ATTACHMENTS:

None

Docusign Envelope ID: 1DDD049B-FCF9-4559-95A9-751907C4636E

RESOLUTION NO. 15821

A RESOLUTION APPROVING PAYMENT IN THE AMOUNT OF $80,000 FROM PROJECT ACCOUNT CI2113 - AMERICAN RESCUE PLAN ACT FOR CITY-WIDE TRASH REMOVAL PROJECTS AS AUTHORIZED BY SECTION 603(C)(1)(C) OF THE AMERICAN RESCUE PLAN ACT AND U.S. TREASURY FINAL RULE 31 CFR §35.6

WHEREAS, on March 11, 2021, President Biden signed the U.S. Senate-amended H.R. 1319 (P.L. 117-2) known as the American Rescue Plan Act (hereinafter "ARPA"); and

WHEREAS, on May 10, 2021, the U.S. Treasury issued the Interim Final Rule to implement ARPA in Title 31, Part 35 of the Code of Federal Regulations ("CFR"); and

WHEREAS, on January 6, 2022, the U.S. Treasury issued, with an effective date of April 1, 2022, the Final Rule to implement ARPA in Title 31, Part 35 of the CFR; and

WHEREAS, under ARPA Section 603 (c)(1)(C) and the Final Rule 31 CFR 35.6 recipients may use Coronavirus Local Fiscal Recovery ("CLFR") Funds on governmental services pursuant to the revenue replacement calculation; NOW THEREFORE,

BE IT RESOLVED BY THE CITY COUNCIL OF PUEBLO, that

SECTION 1.

Payment in the amount of $80,000.00 is hereby authorized from Project Account CI2113 - American Rescue Plan for purchases related to various cleanup events and activities within the City.

SECTION 2.

The officers of the City are authorized to perform any and all acts consistent with this Resolution to implement the policies and procedures described herein.

Docusign Envelope ID: 1DDD049B-FCF9-4559-95A9-751907C4636E

SECTION 3.

This Resolution shall become effective immediately upon final passage.

INTRODUCED: November 11, 2024

BY: Regina Maestri
MEMBER OF CITY COUNCIL

APPROVED: DocuSigned by: Mark Alliff
B7A4F51823AB462...
PRESIDENT OF CITY COUNCIL

ATTESTED BY: DocuSigned by:
7C02EBDEFC3D43C...
CITY CLERK

Background Paper for Proposed Ordinance

COUNCIL MEETING DATE: November 11, 2024

TO: President Mark Aliff and Members of City Council

CC: Mayor Heather Graham

VIA: Marisa Stoller, City Clerk

FROM: Danny Nunn
Heather Graham, Mayor

SUBJECT: AN ORDINANCE LEVYING AND CERTIFYING THE CITY OF PUEBLO PROPERTY TAX MILL LEVY MADE IN 2024 FOR THE 2025 BUDGET YEAR

SUMMARY:

The attached Ordinance sets the mill levy for the property tax to be assessed and collected for use in the 2025 budget.

PREVIOUS COUNCIL ACTION:

None.

BACKGROUND:

For the purpose of meeting the general operating expenses of the City of Pueblo during the 2025 Fiscal Year this Ordinance will impose a mill levy upon real property located within the City of Pueblo.

FINANCIAL IMPLICATIONS:

The levy is set at 15.633 mills, which is the same as 2024. It is estimated to generate $19,317,371 in property tax, this amount is net of estimated uncollectible taxes. The assessed value, as provided by the Pueblo County Assessor, is $1,261,265,984.

BOARD/COMMISSION RECOMMENDATION:

Not applicable.

STAKEHOLDER PROCESS:

Not applicable.

ALTERNATIVES:

Not applicable.

RECOMMENDATION:

Approval of this Ordinance.

ATTACHMENTS:

None

ORDINANCE NO.

AN ORDINANCE LEVYING AND CERTIFYING THE CITY OF PUEBLO PROPERTY TAX MILL LEVY MADE IN 2024 FOR THE 2025 BUDGET YEAR

WHEREAS, the City of Pueblo's budget for fiscal year 2025 has been prepared and approved, and

WHEREAS, the 2024 net assessed valuation of all taxable property in the City of Pueblo as certified by the Pueblo County Assessor is $1,261,265,984, and

WHEREAS, the property tax revenue for the fiscal year 2024 is estimated to be $19,317,371; NOW, THEREFORE,

BE IT ORDAINED BY THE CITY COUNCIL OF PUEBLO, that:

SECTION 1.

For the purpose of meeting the general operating expenses of the City of Pueblo during the 2025 Fiscal Year, there is hereby made, set and levied a tax of 15.633 mills upon each dollar of the total assessed valuation of all taxable property located within the City of Pueblo on the assessment date.

SECTION 2.

The City Council of the City of Pueblo does hereby certify to the County Commissioners of Pueblo County, Colorado the following mill levy imposed by this Ordinance upon each dollar of the total valuation for assessment of all taxable property located within the City of Pueblo on the assessment date:

Gross Mill Levy	15.633 mills

SECTION 3.

The City Clerk is hereby directed to deliver a certified copy of this Ordinance, together with a Certificate of Tax Levies, form DLG 70, properly completed by the Director of Finance, to the County of Commissioners of Pueblo County, Colorado, and the Division of Local Government immediately after passage of this Ordinance.

SECTION 4.

All increases to the City of Pueblo's net fund balance shall constitute and be considered "reserve increases" and therefore a part of the City of Pueblo's 2025 fiscal year spending. All 2025 year-end balances shall constitute and be considered "reserves" and all subsequent expenditures and transfers from such reserves shall be excluded from the City of Pueblo's fiscal year spending within the meaning of Article X, Section 20 (2)(e) of the Colorado Constitution.

SECTION 5.

The officers and the staff of the City are authorized to perform any and all acts consistent with the intent of this Ordinance to implement the policies and procedures described herein.

SECTION 6.

This Ordinance shall become effective on the date of final action by the Mayor and City

Council.

Action by City Council:

Introduced and initial adoption of Ordinance by City Council on _____.

Final adoption of Ordinance by City Council on _____.

_____
President of City Council

Action by the Mayor:

☐ Approved on _____.

☐ Disapproved on _____ based on the following objections:

_____
_____
_____
_____

_____
Mayor

Action by City Council After Disapproval by the Mayor:

☐ Council did not act to override the Mayor's veto.

☐ Ordinance re-adopted on a vote of _____, on _____

☐ Council action on _____ failed to override the Mayor's veto.

_____
President of City Council

ATTEST

_____
City Clerk

Background Paper for Proposed Ordinance

COUNCIL MEETING DATE: November 11, 2024

TO: President Mark Aliff and Members of City Council

CC: Mayor Heather Graham

VIA: Marisa Stoller, City Clerk

FROM: Danny Nunn
Heather Graham, Mayor

SUBJECT: AN ORDINANCE MAKING APPROPRIATION FOR THE GENERAL FUND, SPECIAL REVENUE FUNDS, ENTERPRISE FUNDS, INTERNAL SERVICE FUNDS, DEBT SERVICE FUNDS, AND CAPITAL PROJECT FUNDS FOR THE FISCAL YEAR 2025 AND ADOPTING THE BUDGET FOR THE YEAR 2025

SUMMARY:

The City charter requires that the City Council, through the adoption of the budget, approve all City expenditures. The annual budget sets forth a plan for the 2025 expenditures. Provided in the Ordinance is the Mayor's recommended budget.

PREVIOUS COUNCIL ACTION:

None.

BACKGROUND:

This budget as originally presented to the City Council and the citizens of Pueblo on October 15, 2024, set forth a plan whereby the City will expend all anticipated general fund revenues and an additional $8,546,233 of funds from reserves. The Council designated minimum reserve will be equal to 12% of the annual General Fund expenditures and transfers out for the fiscal year 2025. The budget document includes total spending from the General Fund in the amount of $125,737,988, requiring $8,546,233 from reserves in order to provide safe and reliable services for the benefit of the citizens of the City of Pueblo.

FINANCIAL IMPLICATIONS:

See background.

BOARD/COMMISSION RECOMMENDATION:

Not applicable.

STAKEHOLDER PROCESS:

The recommended budget has been available on the City's web site, as well as at the Rawlings library location since October 16, 2024. In addition, per the requirements of Section 7-9 of the Charter for the City of Pueblo, a public hearing was held in the Council Chambers during the regular meeting of the City Council on October 28, 2024.

ALTERNATIVES:

Not applicable.

RECOMMENDATION:

Approval of the Ordinance.

ATTACHMENTS:

None

ORDINANCE NO.

AN ORDINANCE MAKING APPROPRIATION FOR THE GENERAL FUND, SPECIAL REVENUE FUNDS, ENTERPRISE FUNDS, INTERNAL SERVICE FUNDS, DEBT SERVICE FUNDS, AND CAPITAL PROJECT FUNDS FOR THE FISCAL YEAR 2025 AND ADOPTING THE BUDGET FOR THE YEAR 2025

BE IT ORDAINED BY THE CITY COUNCIL OF PUEBLO, that:

SECTION 1.

The budget for the fiscal year 2025, as proposed by the Mayor and as amended by the City Council, the original of which is on file with the Director of Finance, is incorporated herein in full, and hereby approved and adopted.

SECTION 2.

The General Fund Revenue for Fiscal Year 2025 is hereby estimated, and the General Fund Appropriation by Department for Fiscal Year 2025 is hereby made as follows:

REVENUE BY SOURCE	**AMOUNT**	**APPROPRIATION BY DEPARTMENT**	**AMOUNT**
Taxes	99,963,096	General Government	19,325,744
Licenses & Permits	1,100,800	Police	42,199,793
Intergovernmental	2,925,000	Fire	28,755,103
Charges for Service	5,142,998	Public Works	9,887,859
Fines & Forfeits	1,444,050	Parks	8,566,970
Other Revenue	2,767,900	Non-Departmental	8,054,342
Transfers In	3,847,911	Transfers Out	8,948,177
Fund Balance Reserves	8,546,233		
General Fund Total	**125,737,988**	**General Fund Total**	**125,737,988**

SECTION 3.

Revenue is hereby estimated, and appropriations hereby made for the Fiscal Year 2025 for all other Funds of the City of Pueblo as follows:

OTHER FUNDS	**REVENUE**	**APPROPRIATION**
INTERGOVERNMENTAL	6,817,559	6,817,559
SPECIAL CHARGES	6,257,007	6,257,007
SPECIAL DISTRICT	728,649	728,649
OTHER SPECIAL REVENUE	571,487	571,487
HUD GRANTS	2,943,757	2,943,757
STIMULUS GRANTS	85,087	85,087

PUBLIC IMPROVEMENTS	3,648,400	3,648,400
DEBT SERVICE FUND	2,621,998	2,621,998
ECONOMIC DEVELOPMENT TAX	15,569,346	15,569,346
POLICE SAFETY TAX	4,810,461	4,810,461
ELMWOOD GOLF COURSE	1,866,876	1,866,876
WALKINGSTICK GOLF COURSE	1,428,300	1,428,300
HONOR FARM PROPERTIES	132,898	132,898
MEMORIAL HALL	2,505,249	2,505,249
MEMORIAL AIRPORT	2,477,352	2,477,352
PUEBLO TRANSIT	6,607,143	6,607,143
PARKING FACILITIES	800,125	800,125
WASTEWATER ENTERPRISE	34,749,722	34,749,722
STORMWATER UTILITY	5,650,000	5,650,000
INTERNAL SERVICE FUNDS	22,306,530	22,306,530

SECTION 4.

On November 3, 2020, the electors of the City of Pueblo, Colorado enacted Ordinance No. 9764, providing for a one-half cent sale and use tax rate increase for a five-year period ending on December 31, 2026, and pledging the revenue therefrom for job creating capital improvement projects. The anticipated revenue from this tax rate increase and the investment income thereon, for the Fiscal Year 2025 is $15,569,346 and the full amount thereof, plus any amount available in the fund balance, is hereby appropriated for projects to be determined by the Mayor and City Council.

SECTION 5.

It is the policy of the City Council to accumulate and maintain a General Fund reserve. Effective with the adoption of the FY 2025 budget, this reserve amount will be equal to 12% of the annual General Fund expenditures and transfers out.

SECTION 6.

Authorized staff positions within all departments of the City, as well as the salaries, therefore, are approved and adopted by separate Ordinances. All information pertaining to staffing and salary included in the budget document incorporated herein is solely for the purpose of providing additional information to the user of the document.

SECTION 7.

Pursuant to Section 7-12 and 7-13 of the Charter of the City of Pueblo, the Mayor is

hereby authorized to maintain budgetary control over approved allotments within each department by classification of expenditure category, rather than line item.

SECTION 8.

The officers and the staff of the City are authorized to perform any and all acts consistent with the intent of this Ordinance to implement the policies and procedures described herein.

SECTION 9.

No expenditures shall be made, or warrants issued against any monies appropriated, except in strict conformity with the Charter of the City of Pueblo and in accordance with the provisions of this Ordinance.

SECTION 10.

No expenditures shall be made, or warrants issued against any monies appropriated, except in strict conformity with the Charter of the City of Pueblo and in accordance with the provisions of this Ordinance.

Action by City Council:

Introduced and initial adoption of Ordinance by City Council on _____.

Final adoption of Ordinance by City Council on _____.

_____
President of City Council

Action by the Mayor:

☐ Approved on _____.

☐ Disapproved on _____ based on the following objections:

_____
_____
_____
_____

_____
Mayor

Action by City Council After Disapproval by the Mayor:

☐ Council did not act to override the Mayor's veto.

☐ Ordinance re-adopted on a vote of _____, on _____

☐ Council action on _____ failed to override the Mayor's veto.

President of City Council

ATTEST

City Clerk

Background Paper for Proposed Ordinance

COUNCIL MEETING DATE: November 11, 2024

TO: President Mark Aliff and Members of City Council

CC: Mayor Heather Graham

VIA: Marisa Stoller, City Clerk

FROM: Danny Nunn
Heather Graham, Mayor

SUBJECT: AN ORDINANCE LEVYING AND CERTIFYING THE BANDERA BOULEVARD SPECIAL IMPROVEMENT MAINTENANCE DISTRICT PROPERTY TAX MILL LEVY MADE IN 2024 FOR THE 2025 BUDGET YEAR

SUMMARY:

The attached Ordinance sets the mill levy for the property tax within the Bandera Boulevard Special Improvement Maintenance District to be assessed and collected for use in the 2025 budget.

PREVIOUS COUNCIL ACTION:

None.

BACKGROUND:

The City Council as the governing body of the Bandera Boulevard Special Improvement Maintenance District, for the purpose of meeting maintenance and reserve expenses of the District, through this Ordinance sets and levies a tax of 5.000 mills upon taxable real property located within the Bandera Boulevard Special Improvement Maintenance District.

FINANCIAL IMPLICATIONS:

By approval of the voters within the District, the levy is fixed at 5.000 mills. The mill levy of 5.000 mills is estimated to generate $46,784 in property taxes on an assessed valuation of $9,356,726.

BOARD/COMMISSION RECOMMENDATION:

Approval of this Ordinance.

STAKEHOLDER PROCESS:

The Bandera Boulevard Special Improvement Maintenance District Advisory Committee met in October of 2024 to discuss the 2025 operations and budget of the District. The Advisory Committee recommended the mill levy remain at 5.000 mills with no temporary credit for 2024 to be collected in 2025.

ALTERNATIVES:

Not applicable.

RECOMMENDATION:

Approval of the Ordinance.

ATTACHMENTS:

None

ORDINANCE NO.

AN ORDINANCE LEVYING AND CERTIFYING THE BANDERA BOULEVARD SPECIAL IMPROVEMENT MAINTENANCE DISTRICT PROPERTY TAX MILL LEVY MADE IN 2024 FOR THE 2025 BUDGET YEAR

WHEREAS, the Bandera Boulevard Special Improvement Maintenance District's budget for fiscal year 2025 has been prepared and approved, and

WHEREAS, the 2024 net assessed valuation of all taxable property in the Bandera Boulevard Special Improvements Maintenance District as certified by the Pueblo County Assessor is $9,356,726 and

WHEREAS, the tax revenue for the fiscal year 2025 is estimated to be $46,784; NOW, THEREFORE,

BE IT ORDAINED BY THE CITY COUNCIL OF PUEBLO, that:

SECTION 1.

The City Council as the governing body of the Bandera Boulevard Special Improvement Maintenance District, for the purpose of meeting maintenance expenses of the District, does hereby make, set and levy a tax of 5.000 mills upon each dollar of the total assessed valuation of all taxable real property located within the Bandera Boulevard Special Improvement Maintenance District on the assessment date to meet the cost of maintenance and reserve requirements for fiscal year 2025.

SECTION 2.

The City Council of the City of Pueblo does hereby fix and certify to the County Commissioners of Pueblo County, Colorado the following mill levy imposed by this Ordinance upon each dollar of the total valuation for assessment of all taxable real property located within the Bandera Boulevard Special Improvement Maintenance District on the assessment date:

Gross Mill Levy	5.000 mills

SECTION 3.

The City Clerk is hereby directed to deliver a certified copy of this Ordinance, together with a Certificate of Tax Levies, from DLG 70, properly completed by the Director of Finance, to the County Commissioners of Pueblo County, Colorado, and the Division of Local Government immediately after passage of this Ordinance.

SECTION 4.

All increases to the District's net fund balance shall constitute and be considered "reserve increases" and therefore a part of the District's 2025 fiscal year spending. All 2025 year-end balance shall constitute and be considered "reserves" and all subsequent expenditures and transfers from such reserves shall be excluded from the District's fiscal year spending within the meaning of Article X, Section 20 (20)(e) of the Colorado Constitution.

SECTION 5.

The officers and the staff of the City are authorized to perform any and all acts consistent with the intent of this Ordinance to implement the policies and procedures described

herein.

SECTION 6.

The Ordinance shall become effective on the date of final action by the Mayor and City Council.

Action by City Council:

Introduced and initial adoption of Ordinance by City Council on _____.

Final adoption of Ordinance by City Council on _____.

_____
President of City Council

Action by the Mayor:

☐ Approved on _____.

☐ Disapproved on _____ based on the following objections:

_____
_____
_____
_____

_____
Mayor

Action by City Council After Disapproval by the Mayor:

☐ Council did not act to override the Mayor's veto.

☐ Ordinance re-adopted on a vote of _____, on _____

☐ Council action on _____ failed to override the Mayor's veto.

_____
President of City Council

ATTEST

_____
City Clerk

Background Paper for Proposed Ordinance

COUNCIL MEETING DATE: November 11, 2024

TO: President Mark Aliff and Members of City Council

CC: Mayor Heather Graham

VIA: Marisa Stoller, City Clerk

FROM: Danny Nunn
Heather Graham, Mayor

SUBJECT: AN ORDINANCE LEVYING AND CERTIFYING THE SOUTHPOINTE SPECIAL IMPROVEMENT MAINTENANCE DISTRICT PROPERTY TAX MILL LEVY MADE IN 2024 FOR THE 2025 BUDGET YEAR

SUMMARY:

The attached Ordinance sets the mill levy for property tax within the SouthPointe Special Improvement Maintenance District to be assessed and collected for use in the 2025 budget.

PREVIOUS COUNCIL ACTION:

None.

BACKGROUND:

The City Council as the governing body of the SouthPointe Special Improvement Maintenance District, for the purpose of meeting maintenance expenses of the District, through this Ordinance sets and levies a tax of 5.000 mills upon taxable real property located within the SouthPointe Special Improvement Maintenance District.

FINANCIAL IMPLICATIONS:

By approval of the voters within the District, the levy is fixed at 5.000 mils. It is estimated to generate $38,592 in property taxes on an assessed valuation of $7,718,372.

BOARD/COMMISSION RECOMMENDATION:

Approval of this Ordinance.

STAKEHOLDER PROCESS:

The Southpointe Special Improvement Maintenance District Advisory Committee met in October of 2024 to discuss the 2025 operations and budget of the District. The Advisory Committee recommended the mill levy remain at 5.000 mills for 2024 to be collected in 2025.

ALTERNATIVES:

Not applicable.

RECOMMENDATION:

Approval of this Ordinance.

ATTACHMENTS:

None

ORDINANCE NO.

AN ORDINANCE LEVYING AND CERTIFYING THE SOUTHPOINTE SPECIAL IMPROVEMENT MAINTENANCE DISTRICT PROPERTY TAX MILL LEVY MADE IN 2024 FOR THE 2025 BUDGET YEAR

WHEREAS, the SouthPointe Special Improvement Maintenance Distict's budget for fiscal year 2025 has been prepared and approved, and

WHEREAS, the 2024 net assessed valuation of all taxable property in the SouthPointe Special Improvement Maintenance District as certified by the Pueblo County Assessor is $7,718,372, and

WHEREAS, the property tax revenue for the fiscal year 2025 is estimated to be $38,592; NOW, THEREFORE,

BE IT ORDAINED BY THE CITY COUNCIL OF PUEBLO, that:

SECTION 1.

The City Council as the governing body of the SouthPointe Special Improvement Maintenance District, for the purpose of meeting maintenance expenses of the District, does hereby make, set and levy a tax of 5.000 mills upon each dollar of the total assessed valuation of all taxable real property located within the SouthPointe Special Improvement Maintenance District on the assessment date.

SECTION 2.

The City Council of the City of Pueblo does hereby fix and certify to the County Commissioners of Pueblo County, Colorado the following mill levy imposed by this Ordinance upon each dollar of the total valuation for assessment of all taxable real property located within the SouthPointe Special Improvement Maintenance District on the assessment date:

Gross Mill Levy	5.000 mills

SECTION 3.

The City Clerk is hereby directed to deliver a certified copy of this Ordinance, together with a Certificate of Tax Levies, form DLG 70, properly completed by the Director of Finance, to the County Commissioners of Pueblo County, Colorado, and the Division of Local Government immediately after passage of this Ordinance.

SECTION 4.

All increases to the District's net fund balance shall constitute and be considered "reserve increases" and therefore a part of the district's 2025 fiscal year spending. All 2025 year-end balances shall constitute and be considered "reserves" and all subsequent expenditures and transfers from such reserves shall be excluded from the District's fiscal year spending within the meaning of Article X, Section 20 (2)(e) of the Colorado Constitution.

SECTION 5.

The officers and the staff of the City are directed and authorized to perform any and all acts consistent with the intent of this Ordinance to effectuate the policies and procedures

described herein.

SECTION 6.

This Ordinance shall become effective on the date of final action by the Mayor and City Council.

Action by City Council:

Introduced and initial adoption of Ordinance by City Council on _____.

Final adoption of Ordinance by City Council on _____.

_____
President of City Council

Action by the Mayor:

☐ Approved on _____.

☐ Disapproved on _____ based on the following objections:

_____
_____
_____
_____

_____
Mayor

Action by City Council After Disapproval by the Mayor:

☐ Council did not act to override the Mayor's veto.

☐ Ordinance re-adopted on a vote of _____, on _____

☐ Council action on _____ failed to override the Mayor's veto.

_____
President of City Council

ATTEST

_____
City Clerk

Background Paper for Proposed Ordinance

COUNCIL MEETING DATE: November 11, 2024

TO: President Mark Aliff and Members of City Council

CC: Mayor Heather Graham

VIA: Marisa Stoller, City Clerk

FROM: Chris Noeller, Chief of Police

SUBJECT: AN ORDINANCE ESTABLISHING PROJECT PS2410, THE REAL TIME CRIME CENTER PROJECT, TRANSFERRING $1,000,000 FROM 10120502-51040 TO PS2410, BUDGETING AND APPROPRIATING FUNDS IN THE AMOUNT OF $1,000,000 AND AUTHORIZING MAYOR GRAHAM TO EXECUTE SAME

SUMMARY:

This Ordinance creates Project PS2410, transfers funds in the amount of $1,000,000.00 from 10120502-51040 to the project, and budgets and appropriates funds totaling $1,000,000.00 for the project for the purpose of providing funds to match a Colorado Department of Local Affairs grant to help fund the Pueblo Police Department's Real Time Crime Center.

PREVIOUS COUNCIL ACTION:

None.

BACKGROUND:

The Real Time Crime Center (RTCC) was formally launched in July 2024. The RTCC leverages technology for the purpose of helping the Pueblo Police Department be more efficient in reducing crime and improving the quality of life in the City of Pueblo. The Police Department applied for, and was awarded, a $1,000,000.00 grant from the Colorado Department of Local Affairs to help fund its Real Time Crime Center. The grantor requires a $1,000,000.00 match from the City of Pueblo. The RTCC would like to expand its use of technology, such as increasing the area covered by gunshot detection. This funding will help purchase this technology.

FINANCIAL IMPLICATIONS:

The funds in the amount of $1,000,000.00 are being transferred from 10120502-51040, Wages / General Service, to PS2410.

BOARD/COMMISSION RECOMMENDATION:

None.

STAKEHOLDER PROCESS:

None.

ALTERNATIVES:

Decline the grant.

RECOMMENDATION:

Approve the Ordinance.

ATTACHMENTS:

None

ORDINANCE NO.

AN ORDINANCE ESTABLISHING PROJECT PS2410, THE REAL TIME CRIME CENTER PROJECT, TRANSFERRING $1,000,000 FROM 10120502-51040 TO PS2410, BUDGETING AND APPROPRIATING FUNDS IN THE AMOUNT OF $1,000,000 AND AUTHORIZING MAYOR GRAHAM TO EXECUTE SAME

BE IT ORDAINED BY THE CITY COUNCIL OF PUEBLO, that:

SECTION 1.

Project PS2410, the Real Time Crime Center Project, is hereby established.

SECTION 2.

Funds in the amount of $1,000,000.00 are hereby transferred from account 10120502-51040 into account Project PS2410, the Real Time Crime Center Project, and budgeted and appropriated for Project PS2410.

SECTION 3.

The officers of the City of Pueblo are authorized to perform any and all acts consistent with this Ordinance to implement the policies and procedures described herein.

SECTION 4.

This Ordinance shall become effective on the date of final action by Mayor Graham and City Council.

Action by City Council:

Introduced and initial adoption of Ordinance by City Council on _____.

Final adoption of Ordinance by City Council on _____.

_____
President of City Council

Action by the Mayor:

☐ Approved on _____.

☐ Disapproved on _____ based on the following objections:

_____
_____
_____
_____

_____
Mayor

Action by City Council After Disapproval by the Mayor:

☐ Council did not act to override the Mayor's veto.

☐ Ordinance re-adopted on a vote of _____, on _____

☐ Council action on _____ failed to override the Mayor's veto.

_____
President of City Council

ATTEST

_____
City Clerk

Background Paper for Proposed Action Item

COUNCIL MEETING DATE: November 11, 2024

TO: President Mark Aliff and Members of City Council

CC: Mayor Heather Graham

VIA: Marisa Stoller, City Clerk

FROM: Chris Noeller, Chief of Police

SUBJECT: AN ORDINANCE APPROVING AN AGREEMENT BETWEEN AXON ENTERPRISE, INC., A DELAWARE CORPORATION, AND THE CITY OF PUEBLO, A COLORADO MUNICIPAL CORPORATION, FOR THE CONTINUATION OF VIDEO STORAGE SERVICES AND PURCHASE OF NEW BODY WORN CAMERA HARDWARE AND RELATED SERVICES AND ACCESSORIES, AND AUTHORIZING MAYOR GRAHAM TO EXECUTE SAME

SUMMARY:

Attached is a proposed Ordinance approving a Master Services and Purchasing Agreement between the City of Pueblo and Axon Enterprise, Inc., including Quote No. Q-536002-45559.636M dated 010/23/2024.

PREVIOUS COUNCIL ACTION:

City Council approved the previous agreements and quotes with Axon.

BACKGROUND:

The use of body worn cameras allows police officers to record video and audio of their interactions with the public. Body worn cameras can provide conclusive evidence of conduct that may assist in the prosecution of criminal cases, resolve citizen complaints, and increase transparency. The use of body worn cameras by police officers in this and other jurisdictions has resulted in an overwhelmingly positive impact, enhancing officer safety, reducing liability, and increasing training opportunities.

In 2014, the Pueblo Police Department ("PPD") began its body worn camera program. At that time, cameras from three manufacturers were tested and Axon's body worn cameras received the highest marks on officer surveys for quality of video, comfort and ease of use. As a result, Officers unanimously recommended Axon's products. Since that time, Axon's hardware, software, and cloud-based storage system (Evidence.com) have been used by nearly every staff member of the PPD.

Axon's cloud-based video storage system, Evidence.com, is a hosted video management platform that provides the necessary security, unlimited access and storage, and ease of use to enable efficient and effective record-keeping and in-system sharing between staff of the department and necessary external entities such as district attorney offices, defense attorneys, and other law enforcement agencies. Axon's service (Evidence.com) currently maintains all body worn camera video recorded by the PPD to date. It has features that automatically activate the camera when an officer responds to a call, and tags and associates recorded video with that call. These features allow for accurate and efficient metadata tagging, audit trails and chain of custody, permission-controlled access, and automated retention scheduling.

Axon is the only vendor that provides a complete technology package, including: a high quality camera; secure hosted video management and storage service; multiple accessories that automatically activate the cameras during calls; numerous accessory software applications, including those that allow for officers to upload evidence on-scene, a platform that allows citizens to upload evidence themselves, live-video streaming, and a feature that performs automatic redaction of protected content; a transcription service, and taser electric conducted weapons and accessories. The combination of technology offered through the agreement is considered sole-source in accordance with Section 5.4(1) of the City's Purchasing Policies and Procedures.

FINANCIAL IMPLICATIONS:

Payment for the body worn cameras, software, and services will be made as set forth in the Quote and Agreement will come from Public Safety Sales Tax (2B) funds.

BOARD/COMMISSION RECOMMENDATION:

Not applicable for this Ordinance.

STAKEHOLDER PROCESS:

Not applicable for this Ordinance.

ALTERNATIVES:

City Council may refuse to execute the agreement which will cause the Department's body worn camera program and related services to terminate.

RECOMMENDATION:

Approval of the Ordinance.

ATTACHMENTS:

1. Complete_with_Docusign_Pueblo_PD_(CO)-Axon_M

ORDINANCE NO.

AN ORDINANCE APPROVING AN AGREEMENT BETWEEN AXON ENTERPRISE, INC., A DELAWARE CORPORATION, AND THE CITY OF PUEBLO, A COLORADO MUNICIPAL CORPORATION, FOR THE CONTINUATION OF VIDEO STORAGE SERVICES AND PURCHASE OF NEW BODY WORN CAMERA HARDWARE AND RELATED SERVICES AND ACCESSORIES, AND AUTHORIZING MAYOR GRAHAM TO EXECUTE SAME

BE IT ORDAINED BY THE CITY COUNCIL OF PUEBLO, that:

SECTION 1.

The Master Services and Purchasing Agreement between the City of Pueblo, a Colorado Municipal Corporation, and Axon Enterprise, Inc., a Delaware Corporation, including Quote No. Q-536002-45559.636M dated 09/24/2024 and appendices, relating to the Pueblo Police Department's purchase of body worn cameras and video storage, copies of which are attached hereto, having been approved as to form by the City Attorney, is hereby approved.

SECTION 2.

The Mayor of the City of Pueblo is hereby authorized and directed to execute said Master Services and Purchasing Agreement and related Quote in the name of the City and the City Clerk is hereby authorized and directed to affix the official seal of the City of Pueblo and attest same.

SECTION 3.

The officers and staff of the City of Pueblo are directed and authorized to perform any and all acts consistent with the intent of this Ordinance and the attached agreement to effectuate the transactions described therein.

SECTION 4.

This Ordinance shall become effective on the date of final action by Mayor Graham and City Council.

Action by City Council:

Introduced and initial adoption of Ordinance by City Council on _____.

Final adoption of Ordinance by City Council on _____.

_____
President of City Council

Action by the Mayor:

☐ Approved on _____.

☐ Disapproved on _____ based on the following objections:

_____

_____

_____

_____

_____
Mayor

Action by City Council After Disapproval by the Mayor:

☐ Council did not act to override the Mayor's veto.

☐ Ordinance re-adopted on a vote of _____, on _____

☐ Council action on _____ failed to override the Mayor's veto.

_____
President of City Council

ATTEST

_____
City Clerk

Master Services and Purchasing Agreement for Customer

This Master Services and Purchasing Agreement ("**Agreement**") is between Axon Enterprise, Inc. ("**Axon**"), and the customer listed below or, if no customer is listed below, the customer on the Quote attached hereto ("**Customer**"). This Agreement is effective as of the later of the (a) last signature date on this Agreement or (b) date of acceptance of the Quote ("**Effective Date**"). Axon and Customer are each a "**Party**" and collectively "**Parties**". This Agreement governs Customer's purchase and use of the Axon Devices and Services detailed in the Quote as defined below. It is the intent of the Parties that this Agreement will govern all subsequent purchases by Customer for the same Axon Devices and Services in the Quote, and all such subsequent quotes accepted by Customer shall be also incorporated into this Agreement by reference as a Quote. The Parties agree as follows:

1. **Definitions**.

   1.1. "**Axon Cloud Services**" means Axon's web services, including but not limited to, Axon Evidence, Axon Records, Axon Dispatch, FUSUS services and interactions between Axon Evidence and Axon Devices or Axon client software. Axon Cloud Service excludes third-party applications, hardware warranties, and my.evidence.com.

   1.2. "**Axon Device**" means all hardware provided by Axon under this Agreement. Axon-manufactured Devices are a subset of Axon Devices.

   1.3. "**Quote**" means an offer to sell and is only valid for devices and services on the offer at the specified prices. Any inconsistent or supplemental terms within Customer's purchase order in response to a Quote will be void. Orders are subject to prior credit approval. Changes in the deployment estimated ship date may change charges in the Quote. Shipping dates are estimates only. Axon is not responsible for typographical errors in any Quote by Axon, and Axon reserves the right to cancel any orders resulting from such errors.

   1.4. "**Services**" means all services provided by Axon under this Agreement, including software, Axon Cloud Services, and professional services.

2. **Term**. This Agreement begins on the Effective Date and continues until all subscriptions hereunder have expired or have been terminated ("**Term**").

   2.1. All subscriptions including Axon Evidence, Axon Fleet, Officer Safety Plans, Technology Assurance Plans, and TASER 7 or TASER 10 plans begin on the date stated in the Quote. Each subscription term ends upon completion of the subscription stated in the Quote ("**Subscription Term**").

   2.2. Upon completion of the Subscription Term, the Subscription Term will automatically renew for an additional 5 years ("**Renewal Term**"). For purchase of TASER 7 or TASER 10 as a standalone, Axon may increase pricing to its then-current list pricing for any Renewal Term. For all other purchases, Axon may increase pricing on all line items in the Quote by up to 3% at the beginning of each year of the Renewal Term. New devices and services may require additional terms. Axon will not authorize services until Axon receives a signed Quote or accepts a purchase order, whichever is first.

3. **Payment**. Axon invoices for Axon Devices upon shipment, or on the date specified within the invoicing plan in the Quote. Payment is due Net 30 days from the invoice date. Axon invoices for Axon Cloud Services on an upfront annual basis prior to the beginning of the Subscription Term and upon the anniversary of the Subscription Term. Payment obligations are non-cancelable. Customer will pay invoices without setoff, deduction, or withholding. If Axon sends a past due account to collections, Customer is responsible for collection and attorneys' fees. The Parties agree that the Customer has the right to add additional products and services to the contract without restriction or requirement to purchase a specific quantity.

4. **Taxes**. Customer is responsible for sales and other taxes associated with the order unless Customer provides Axon a valid tax exemption certificate.

5. **Shipping**. Axon may make partial shipments and ship Axon Devices from multiple locations. All shipments are FOB Final Destination via common carrier. Customer is responsible for any shipping charges in the Quote.

6. **Returns**. All sales are final. Axon does not allow refunds or exchanges, except warranty returns or as provided by state or federal law.

7. **Warranty**.

   7.1. **Limited Warranty**. Axon warrants that Axon-manufactured Devices are free from defects in workmanship and materials for one (1) year from the date of Customer's receipt, except Signal Sidearm which Axon warrants for thirty (30) months from Customer's receipt and Axon-manufactured accessories, which Axon warrants for ninety (90) days from Customer's receipt, respectively, from the date of Customer's receipt. Used conducted energy weapon ("**CEW**") cartridges are deemed to have operated properly. Extended warranties run from the expiration of the one (1) year hardware warranty through the extended warranty term purchased.

7.2. **Disclaimer. All software and Axon Cloud Services are provided "AS IS," without any warranty of any kind, either express or implied, including without limitation the implied warranties of merchantability, fitness for a particular purpose and non-infringement. Axon Devices and Services that are not manufactured, published or performed by Axon ("Third-Party Products") are not covered by Axon's warranty and are only subject to the warranties of the third-party provider or manufacturer.**

7.3. **Claims**. If Axon receives a valid warranty claim for an Axon-manufactured Device during the warranty term, Axon's sole responsibility is to repair or replace the Axon-manufactured Device with the same or like Axon-manufactured Device, at Axon's option. A replacement Axon-manufactured Device will be new or like new. Axon will warrant the replacement Axon-manufactured Device for the longer of (a) the remaining warranty of the original Axon-manufactured Device or (b) ninety (90) days from the date of repair or replacement.

7.3.1. If Customer exchanges an Axon Device or part, the replacement item becomes Customer's property, and the replaced item becomes Axon's property. Before delivering an Axon-manufactured Device for service, Customer must upload Axon-manufactured Device data to Axon Evidence or download it and retain a copy. Axon is not responsible for any loss of software, data, or other information contained in storage media or any part of the Axon-manufactured Device sent to Axon for service.

7.4. **Spare Axon Devices**. At Axon's reasonable discretion, Axon may provide Customer a predetermined number of spare Axon Devices as detailed in the Quote ("**Spare Axon Devices**"). Spare Axon Devices are intended to replace broken or non-functioning units while Customer submits the broken or non-functioning units, through Axon's warranty return process. Axon will repair or replace the unit with a replacement Axon Device. Title and risk of loss for all Spare Axon Devices shall pass to Customer in accordance with shipping terms of this Agreement. Axon assumes no liability or obligation in the event Customer does not utilize Spare Axon Devices for the intended purpose.

7.5. **Limitations**. Axon's warranty excludes damage related to: (a) failure to follow Axon Device use instructions; (b) Axon Devices used with equipment not manufactured or recommended by Axon; (c) abuse, misuse, or intentional damage to Axon Device; (d) force majeure; (e) Axon Devices repaired or modified by persons other than Axon without Axon's written permission; or (f) Axon Devices with a defaced or removed serial number. Axon's warranty will be void if Customer resells Axon Devices.

7.5.1. To the extent permitted by law, the above warranties and remedies are exclusive. Axon disclaims all other warranties, remedies, and conditions, whether oral, written, statutory, or implied. If statutory or implied warranties cannot be lawfully disclaimed, then such warranties are limited to the duration of the warranty described above and by the provisions in this Agreement. Customer confirms and agrees that in deciding whether to sign this Agreement, Customer has not relied on any statement or representation by Axon or anyone acting on behalf of Axon related to the subject matter of this Agreement that is not in this Agreement.

7.5.2. Axon's cumulative liability to any party for any loss or damage resulting from any claim, demand, or action arising out of or relating to this Agreement will not exceed the purchase price paid to Axon for the Axon Device, or if for Services, the amount paid for such Services over the twelve (12) months preceding the claim. Neither Party will be liable for special, indirect, incidental, punitive or consequential damages, however caused, whether for breach of warranty or contract, negligence, strict liability, tort or any other legal theory.

7.6. **Online Support Platforms**. Use of Axon's online support platforms (e.g., Axon Academy and MyAxon) is governed by the Axon Online Support Platforms Terms of Use Appendix available at www.axon.com/sales-terms-and-conditions.

7.7. **Third-Party Software and Services**. Use of software or services other than those provided by Axon is governed by the terms, if any, entered into between Customer and the respective third-party provider, including, without limitation, the terms applicable to such software or services located at www.axon.com/sales-terms-and-conditions, if any.

7.8. **Axon Aid**. Upon mutual agreement between Axon and Customer, Axon may provide certain products and services to Customer, as a charitable donation under the Axon Aid program. In such event, Customer expressly waives and releases any and all claims, now known or hereafter known, against Axon and its officers, directors, employees, agents, contractors, affiliates, successors, and assigns (collectively, "**Releasees**"), including but not limited to, on account of injury, death, property damage, or loss of data, arising out of or attributable to the Axon Aid program whether arising out of the negligence of any Releasees or otherwise. Customer agrees not to make or bring any such claim against any Releasee, and forever release and discharge all Releasees from liability under such claims. Customer expressly allows Axon to publicly announce its participation in Axon Aid and use its name in marketing materials. Axon may terminate the Axon Aid program without cause immediately

upon notice to the Customer.

8. **Statement of Work**. Certain Axon Devices and Services, including Axon Interview Room, Axon Channel Services, and Axon Fleet, may require a Statement of Work that details Axon's Service deliverables ("**SOW**"). In the event Axon provides an SOW to Customer, Axon is only responsible for the performance of Services described in the SOW. Additional services are out of scope. The Parties must document scope changes in a written and signed change order. Changes may require an equitable adjustment in fees or schedule. The SOW is incorporated into this Agreement by reference.

9. **Axon Device Warnings**. See www.axon.com/legal for the most current Axon Device warnings.

10. **Design Changes**. Axon may make design changes to any Axon Device or Service without notifying Customer or making the same change to Axon Devices and Services previously purchased by Customer.

11. **Bundled Offerings**. Some offerings in bundled offerings may not be generally available at the time of Customer's purchase. Axon will not provide a refund, credit, or additional discount beyond what is in the Quote due to a delay of availability or Customer's election not to utilize any portion of an Axon bundle.

12. **Insurance**. Axon will maintain General Liability, Workers' Compensation, and Automobile Liability insurance. Upon request, Axon will supply certificates of insurance.

13. **IP Rights**. Axon owns and reserves all right, title, and interest in Axon-manufactured Devices and Services and suggestions to Axon, including all related intellectual property rights. Customer will not cause any Axon proprietary rights to be violated.

14. **IP Indemnification**. Axon will indemnify Customer against all claims, losses, and reasonable expenses from any third-party claim alleging that the use of Axon-manufactured Devices, Axon Cloud Services or Axon software ("**Axon Products**") infringes or misappropriates the third-party's intellectual property rights. Customer must promptly provide Axon with written notice of such claim, tender to Axon the defense or settlement of such claim at Axon's expense and cooperate fully with Axon in the defense or settlement of such claim. Axon's IP indemnification obligations do not apply to claims based on (a) modification of Axon Products by Customer or a third-party not approved by Axon; (b) use of Axon Products in combination with hardware or services not approved by Axon; (c) use of Axon Products other than as permitted in this Agreement; or (d) use of Axon Products that is not the most current software release provided by Axon.

15. **Customer Responsibilities**. Customer is responsible for (a) Customer's use of Axon Devices; (b)Customer or an end user's breach of this Agreement or violation of applicable law; (c) disputes between Customer and a third-party over Customer's use of Axon Devices; (d) secure and sustainable destruction and disposal of Axon Devices at Customer's cost; and (e) any regulatory violations or fines, as a result of improper destruction or disposal of Axon Devices.

16. **Termination**.

    16.1. **For Breach**. A Party may terminate this Agreement for cause if it provides thirty (30) days written notice of the breach to the other Party, and the breach remains uncured thirty (30) days after written notice. If Customer terminates this Agreement due to Axon's uncured breach, Axon will refund prepaid amounts on a prorated basis based on the effective date of termination.

    16.2. **By Customer**. If sufficient funds are not appropriated or otherwise legally available to pay the fees, Customer may terminate this Agreement. Customer will deliver notice of termination under this section as soon as reasonably practicable.

    16.3. **Effect of Termination**. Upon termination of this Agreement, Customer rights immediately terminate. Customer remains responsible for all fees incurred before the effective date of termination. If Customer purchases Axon Devices for less than the manufacturer's suggested retail price ("**MSRP**") and this Agreement terminates before the end of the Term, Axon will invoice Customer the difference between the MSRP for Axon Devices received, including any Spare Axon Devices, and amounts paid towards those Axon Devices. Only if terminating for non-appropriation, Customer may return Axon Devices to Axon within thirty (30) days of termination. MSRP is the standalone price of the individual Axon Device at the time of sale. For bundled Axon Devices, MSRP is the standalone price of all individual components.

17. **Confidentiality**. "**Confidential Information**" means nonpublic information designated as confidential or, given the nature of the information or circumstances surrounding disclosure, should reasonably be understood to be confidential. Each Party will take reasonable measures to avoid disclosure, dissemination, or unauthorized use of the other Party's Confidential Information. Unless required by law, neither Party will disclose the other Party's Confidential Information during the Term and for five (5) years thereafter. To the extent permissible by law, Axon pricing is Confidential Information and competition sensitive. If Customer receives a public records request to disclose Axon

Confidential Information, to the extent allowed by law, Customer will provide notice to Axon before disclosure. Axon may publicly announce information related to this Agreement.

18. **General**.

18.1. **Force Majeure**. Neither Party will be liable for any delay or failure to perform due to a cause beyond a Party's reasonable control.

18.2. **Independent Contractors**. The Parties are independent contractors. Neither Party has the authority to bind the other. This Agreement does not create a partnership, franchise, joint venture, Customer, fiduciary, or employment relationship between the Parties.

18.3. **Third-Party Beneficiaries**. There are no third-party beneficiaries under this Agreement.

18.4. **Non-Discrimination**. Neither Party nor its employees will discriminate against any person based on race; religion; creed; color; sex; gender identity and expression; pregnancy; childbirth; breastfeeding; medical conditions related to pregnancy, childbirth, or breastfeeding; sexual orientation; marital status; age; national origin; ancestry; genetic information; disability; veteran status; or any class protected by local, state, or federal law.

18.5. **Export Compliance**. Each Party will comply with all import and export control laws and regulations.

18.6. **Assignment**. Neither Party may assign this Agreement without the other Party's prior written consent. Axon may assign this Agreement, its rights, or obligations without consent: (a) to an affiliate or subsidiary; or (b) for purposes of financing, merger, acquisition, corporate reorganization, or sale of all or substantially all its assets. This Agreement is binding upon the Parties respective successors and assigns.

18.7. **Waiver**. No waiver or delay by either Party in exercising any right under this Agreement constitutes a waiver of that right.

18.8. **Severability**. If a court of competent jurisdiction holds any portion of this Agreement invalid or unenforceable, the remaining portions of this Agreement will remain in effect.

18.9. **Survival**. The following sections will survive termination: Payment, Warranty, Axon Device Warnings, Indemnification, IP Rights, Customer Responsibilities and any other Sections detailed in the survival sections of the Appendices.

18.10. **Governing Law**. The laws of the country, state, province, or municipality where Customer is physically located, without reference to conflict of law rules, govern this Agreement and any dispute arising from it. The United Nations Convention for the International Sale of Goods does not apply to this Agreement.

18.11. **Notices**. All notices must be in English. Notices posted on Customer's Axon Evidence site are effective upon posting. Notices by email are effective on the sent date of the email. Notices by personal delivery are effective immediately. Notices to Customer shall be provided to the address on file with Axon. Notices to Axon shall be provided to Axon Enterprise, Inc., Attn: Legal, 17800 North 85th Street, Scottsdale, Arizona 85255 with a copy to legal@axon.com.

18.12 **Entire Agreement**. This Agreement, the Appendices, including any applicable Appendices not attached herein for the products and services purchased, which are incorporated by reference and located in the Master Purchasing and Services Agreement located at https://www.axon.com/sales-terms-and-conditions, Quote and any SOW(s), represents the entire agreement between the Parties. This Agreement supersedes all prior agreements or understandings, whether written or verbal, regarding the subject matter of this Agreement. This Agreement may only be modified or amended in a writing signed by the Parties.

(Signatures on next page)

Each Party, by and through its respective representative authorized to execute this Agreement, has duly executed and delivered this Agreement as of the date of signature.

AXON:

Axon Enterprise, Inc.

Signature: Signed by: Robert Driscoll 55DAEBB131A4424...

Name: Robert Driscoll

Title: Deputy General Counsel

Date: 10/28/2024 | 2:42 PM MST

CUSTOMER:

City of Pueblo

Signature: _____

Name: _____

Title: _____

Date: _____

Axon Cloud Services Terms of Use Appendix

1. **Definitions**.

    a. **"Customer Content"** is data uploaded into, ingested by, or created in Axon Cloud Services within Customer's tenant, including media or multimedia uploaded into Axon Cloud Services by Customer. Customer Content includes Evidence but excludes Non-Content Data.

    b. "**Evidence**" is media or multimedia uploaded into Axon Evidence as 'evidence' by a Customer. Evidence is a subset of Customer Content.

    c. "**Non-Content Data**" is data, configuration, and usage information about Customer's Axon Cloud Services tenant, Axon Devices and client software, and users that is transmitted or generated when using Axon Devices. Non-Content Data includes data about users captured during account management and customer support activities. Non-Content Data does not include Customer Content.

    d. "**Provided Data**" means de-identified, de-personalized, data derived from Customer's TASER energy weapon deployment reports, related TASER energy weapon logs, body-worn camera footage, and incident reports.

    e. "**Transformed Data**" means the Provided Data used for the purpose of quantitative evaluation of the performance and effectiveness of TASER energy weapons in the field across a variety of circumstances.

2. **Access**. Upon Axon granting Customer a subscription to Axon Cloud Services, Customer may access and use Axon Cloud Services to store and manage Customer Content. Customer may not exceed more end users than the Quote specifies. Axon Air requires an Axon Evidence subscription for each drone operator. For Axon Evidence Lite, Customer may access and use Axon Evidence only to store and manage TASER CEW and TASER CAM data ("**TASER Data**"). Customer may not upload non-TASER Data to Axon Evidence Lite.

3. **Customer Owns Customer Content**. Customer controls and owns all right, title, and interest in Customer Content. Except as outlined herein, Axon obtains no interest in Customer Content, and Customer Content is not Axon's business records. Customer is solely responsible for uploading, sharing, managing, and deleting Customer Content. Axon will only have access to Customer Content for the limited purposes set forth herein. Customer agrees to allow Axon access to Customer Content to (a) perform troubleshooting, maintenance, or diagnostic screenings; and (b) enforce this Agreement or policies governing use of the Axon products.

4. **Security**. Axon will implement commercially reasonable and appropriate measures to secure Customer Content against accidental or unlawful loss, access or disclosure. Axon will maintain a comprehensive information security program to protect Axon Cloud Services and Customer Content including logical, physical access, vulnerability, risk, and configuration management; incident monitoring and response; encryption of uploaded digital evidence; security education; and data protection. Axon agrees to the Federal Bureau of Investigation Criminal Justice Information Services Security Addendum for its digital evidence or records management systems.

5. **Customer Responsibilities**. Customer is responsible for (a) ensuring Customer owns Customer Content or has the necessary rights to use Customer Content (b) ensuring no Customer Content or Customer end user's use of Customer Content or Axon Cloud Services violates this Agreement or applicable laws; (c) maintaining necessary computer equipment and Internet connections for use of Axon Cloud Services and (d) verify the accuracy of any auto generated or AI generated reports. If Customer becomes aware of any violation of this Agreement by an end user, Customer will immediately terminate that end user's access to Axon Cloud Services.

    a. Customer will also maintain the security of end usernames and passwords and security and access by end users to Customer Content. Customer is responsible for ensuring the configuration and utilization of Axon Cloud Services meet applicable Customer regulation and standards. Customer may not sell, transfer, or sublicense access to any other entity or person. If Customer provides access to unauthorized third-parties, Axon may assess additional fees along with suspending Customer's access. Customer shall contact Axon immediately if an unauthorized party may be using Customer's account or Customer Content, or if account information is lost or stolen.

6. **Privacy**. Customer's use of Axon Cloud Services is subject to the Axon Cloud Services Privacy Policy, a current version of which is available at https://www.axon.com/legal/cloud-services-privacy-policy. Customer agrees to allow Axon access to Non-Content Data from Customer to (a) perform troubleshooting, maintenance, or diagnostic

screenings; (b) provide, develop, improve, and support current and future Axon products and related services; and (c) enforce this Agreement or policies governing the use of Axon products.

7. **Axon Body Wi-Fi Positioning**. Axon Body cameras may offer a feature to enhance location services where GPS/GNSS signals may not be available, for instance, within buildings or underground. Customer administrators can manage their choice to use this service within the administrative features of Axon Cloud Services. If Customer chooses to use this service, Axon must also enable the usage of the feature for Customer's Axon Cloud Services tenant. Customer will not see this option with Axon Cloud Services unless Axon has enabled Wi-Fi Positioning for Customer's Axon Cloud Services tenant.

8. **Storage**. For Axon Unlimited Device Storage subscriptions, Customer may store unlimited data in Customer's Axon Evidence account only if data originates from Axon Capture or anAxon Device. Axon may charge Customer additional fees for exceeding purchased storage amounts. Axon may place Customer Content that Customer has not viewed or accessed for six (6) months into archival storage. Customer Content in archival storage will not have immediate availability and may take up to twenty-four (24) hours to access.

   For Third-Party Unlimited Storage the following restrictions apply: (i) it may only be used in conjunction with a valid Axon's Evidence.com user license; (ii) is limited to data of the law enforcement Customer that purchased the Third-Party Unlimited Storage and the Axon's Evidence.com end user or Customer is prohibited from storing data for other law enforcement agencies; and (iii) Customer may only upload and store data that is directly related to: (1) the investigation of, or the prosecution of a crime; (2) common law enforcement activities; or (3) any Customer Content created by Axon Devices or Evidence.com.

9. **Location of Storage**. Axon may transfer Customer Content to third-party subcontractors for storage. Axon will determine the locations of data centers for storage of Customer Content. For United States agencies, Axon will ensure all Agency Content stored in Axon Cloud Services remains within the United States. Ownership of Customer Content remains with Customer.

10. **Suspension**. Axon may temporarily suspend Customer's or any end user's right to access or use any portion or all of Axon Cloud Services immediately upon notice, if Customer or end user's use of or registration for Axon Cloud Services may (a) pose a security risk to Axon Cloud Services or any third-party; (b) adversely impact Axon Cloud Services, the systems, or content of any other customer; (c) subject Axon, Axon's affiliates, or any third-party to liability; or (d) be fraudulent. Customer remains responsible for all fees incurred through suspension. Axon will not delete Customer Content because of suspension, except as specified in this Agreement.

11. **Axon Cloud Services Warranty**. Axon disclaims any warranties or responsibility for data corruption or errors before Customer uploads data to Axon Cloud Services.

12. **TASER Data Science Program**. Axon will provide a quantitative evaluation on the performance and effectiveness of TASER energy weapons in the field across a variety of circumstances.

    If Customer purchases the TASER Data Science Program, Customer grants Axon, its affiliates, and assignees an irrevocable, perpetual, fully paid, royalty-free, and worldwide right and license to use Provided Data solely for the purposes of this Agreement and to create Transformed Data. Customer shall own all rights and title to Provided Data. Axon shall own all rights and title to Transformed Data and any derivatives of Transformed Data.

    Axon grants to Customer an irrevocable, perpetual, fully paid, royalty-free, license to use to TASER Data Science report provided to Customer for its own internal purposes. **The Data Science report is provided "as is" and without any warranty of any kind.**

    In the event Customer seeks Axon's deletion of Provided Data, it may submit a request to privacy@axon.com. Where reasonably capable of doing so, Axon will implement the request but at a minimum will not continue to collect Provided Data from Customer.

13. **Axon Records**. Axon Records is the software-as-a-service product that is generally available at the time Customer purchases an OSP 7 or OSP 10 bundle. During Customer's Axon Records Subscription Term, if any, Customer will be entitled to receive Axon's Update and Upgrade releases on an if-and-when available basis.

    a. The Axon Records Subscription Term will end upon the completion of the Axon Records Subscription as documented in the Quote, or if purchased as part of an OSP 7 or OSP 10 bundle, upon completion of the OSP 7 or OSP 10 Term ("**Axon Records Subscription**")

b. An "**Update**" is a generally available release of Axon Records that Axon makes available from time to time. An "**Upgrade**" includes (i) new versions of Axon Records that enhance features and functionality, as solely determined by Axon; and/or (ii) new versions of Axon Records that provide additional features or perform additional functions. Upgrades exclude new products that Axon introduces and markets as distinct products or applications.

c. New or additional Axon products and applications, as well as any Axon professional services needed to configure Axon Records, are not included. If Customer purchases Axon Records as part of a bundled offering, the Axon Record subscription begins on the later of the (1) start date of that bundled offering, or (2) date Axon provisions Axon Records to Customer.

d. Users of Axon Records at the Customer may upload files to entities (incidents, reports, cases, etc) in Axon Records with no limit to the number of files and amount of storage. Notwithstanding the foregoing, Axon may limit usage should the Customer exceed an average rate of one-hundred (100) GB per user per year of uploaded files. Axon will not bill for overages.

14. **Axon Cloud Services Restrictions**. Customer and Customer end users (including employees, contractors, agents, officers, volunteers, and directors), may not, or may not attempt to:

    a. reverse engineer, disassemble, or decompile Axon Cloud Services or apply any process to derive any source code included in Axon Cloud Services, or allow others to do the same;

    b. copy, modify, tamper with, repair, or create derivative works of any part of Axon Cloud Services;

    c. access or use Axon Cloud Services with the intent to gain unauthorized access, avoid incurring fees or exceeding usage limits or quotas;

    d. use Axon Cloud Serves as a service bureau, or as part of an Customer infrastructure as a service;

    e. use trade secret information contained in Axon Cloud Services, except as expressly permitted in this Agreement;

    f. access Axon Cloud Services to build a competitive device or service or copy any features, functions, or graphics of Axon Cloud Services;

    g. remove, alter, or obscure any confidentiality or proprietary rights notices (including copyright and trademark notices) of Axon's or Axon's licensors on or within Axon Cloud Services; or

    h. use Axon Cloud Services to store or transmit infringing, libelous, or other unlawful or tortious material; material in violation of third-party privacy rights; or malicious code.

15. **Draft One** Axon may impose usage restrictions if a single user generates more than one hundred (100) reports per month for two or more consecutive months.

16. **After Termination**. Axon will not delete Customer Content for ninety (90) days following termination. Axon Cloud Services will not be functional during these ninety (90) days other than the ability to retrieve Customer Content. Customer will not incur additional fees if Customer downloads Customer Content from Axon Cloud Services during this time. Axon has no obligation to maintain or provide Customer Content after these ninety (90) days and will thereafter, unless legally prohibited, delete all Customer Content. Upon request, Axon will provide written proof that Axon successfully deleted and fully removed all Customer Content from Axon Cloud Services.

17. **Post-Termination Assistance**. Axon will provide Customer with the same post-termination data retrieval assistance that Axon generally makes available to all customers. Requests for Axon to provide additional assistance in downloading or transferring Customer Content, including requests for Axon's data egress service, will result in additional fees and Axon will not warrant or guarantee data integrity or readability in the external system.

18. **U.S. Government Rights**. If Customer is a U.S. Federal department or using Axon Cloud Services on behalf of `a U.S. Federal department, Axon Cloud Services is provided as a "commercial item," "commercial computer software," "commercial computer software documentation," and "technical data", as defined in the Federal Acquisition Regulation and Defense Federal Acquisition Regulation Supplement. If Customer is using Axon Cloud Services on behalf of the U.S. Government and these terms fail to meet the U.S. Government's needs or are inconsistent in any respect with federal law, Customer will immediately discontinue use of Axon Cloud Services.

19. **Survival**. Upon any termination of this Agreement, the following sections in this Appendix will survive: Customer Owns Customer Content, Privacy, Storage, Axon Cloud Services Warranty, Customer Responsibilities and Axon Cloud Services Restrictions.

Axon Customer Experience Improvement Program Appendix

1. **Axon Customer Experience Improvement Program (ACEIP)**. The ACEIP is designed to accelerate Axon's development of technology, such as building and supporting automated features, to ultimately increase safety within communities and drive efficiency in public safety. To this end, subject to the limitations on Axon as described below, Axon, where allowed by law, may make limited use of Customer Content from all of its customers to provide, develop, improve, and support current and future Axon products (collectively, "ACEIP Purposes"). However, at all times, Axon will comply with its obligations pursuant to the Axon Cloud Services Terms of Use Appendix to maintain a comprehensive data security program (including compliance with the CJIS Security Policy for Criminal Justice Information), privacy program, and data governance policy, including high industry standards of de-identifying Personal Data, to enforce its security and privacy obligations for the ACEIP. ACEIP has 2 tiers of participation, Tier 1 and Tier 2. By default, Customer will be a participant in ACEIP Tier 1. If Customer does not want to participate in ACEIP Tier 1, Customer can revoke its consent at any time. If Customer wants to participate in Tier 2, as detailed below, Customer can check the ACEIP Tier 2 box below. If Customer does not want to participate in ACEIP Tier 2, Customer should leave box unchecked. At any time, Customer may revoke its consent to ACEIP Tier 1, Tier 2, or both Tiers.

2. **ACEIP Tier 1.**

   2.1. When Axon uses Customer Content for the ACEIP Purposes, Axon will extract from Customer Content and may store separately copies of certain segments or elements of the Customer Content (collectively, "**ACEIP Content**"). When extracting ACEIP Content, Axon will use commercially reasonable efforts to aggregate, transform or de-identify Customer Content so that the extracted ACEIP Content is no longer reasonably capable of being associated with, or could reasonably be linked directly or indirectly to a particular individual ("**Privacy Preserving Technique(s)**"). For illustrative purposes, some examples are described in footnote 1[1]. For clarity, ACEIP Content will still be linked indirectly, with an attribution, to the Customer from which it was extracted. This attribution will be stored separately from the data itself, but is necessary for and will be solely used to enable Axon to identify and delete all ACEIP Content upon Customer request. Once de-identified, ACEIP Content may then be further modified, analyzed, and used to create derivative works. At any time, Customer may revoke the consent granted herein to Axon to access and use Customer Content for ACEIP Purposes. Within 30 days of receiving the Customer's request, Axon will no longer access or use Customer Content for ACEIP Purposes and will delete any and all ACEIP Content. Axon will also delete any derivative works which may reasonably be capable of being associated with, or could reasonably be linked directly or indirectly to Customer. In addition, if Axon uses Customer Content for the ACEIP Purposes, upon request, Axon will make available to Customer a list of the specific type of Customer Content being used to generate ACEIP Content, the purpose of such use, and the retention, privacy preserving extraction technique, and relevant data protection practices applicable to the Customer Content or ACEIP Content ("**Use Case**"). From time to time, Axon may develop and deploy new Use Cases. At least 30 days prior to authorizing the deployment of any new Use Case, Axon will provide Customer notice (by updating the list of Use Case at https://www.axon.com/aceip and providing Customer with a mechanism to obtain notice of that update or another commercially reasonable method to Customer designated contact) ("**New Use Case**").

   2.2. **Expiration of ACEIP Tier 1**. Customer consent granted herein will expire upon termination of the Agreement. In accordance with section 1.1.1, within 30 days of receiving the Customer's request, Axon will no longer access or use Customer Content for ACEIP Purposes and will delete ACEIP Content. Axon will also delete any derivative works which may reasonably be capable of being associated with, or could reasonably be linked directly or indirectly to, Customer.

3. **ACEIP Tier 2**. In addition to ACEIP Tier 1, if Customer wants to help further improve Axon's services, Customer may choose to participate in Tier 2 of the ACEIP. ACEIP Tier 2 grants Axon certain additional rights to use Customer

[1] For example; (a) when extracting specific text to improve automated transcription capabilities, text that could be used to directly identify a particular individual would not be extracted, and extracted text would be disassociated from identifying metadata of any speakers, and the extracted text would be split into individual words and aggregated with other data sources (including publicly available data) to remove any reasonable ability to link any specific text directly or indirectly back to a particular individual; (b) when extracting license plate data to improve Automated License Plate Recognition (ALPR) capabilities, individual license plate characters would be extracted and disassociated from each other so a complete plate could not be reconstituted, and all association to other elements of the source video, such as the vehicle, location, time, and the surrounding environment would also be removed; (c) when extracting audio of potential acoustic events (such as glass breaking or gun shots), very short segments (<1 second) of audio that only contains the likely acoustic events would be extracted and all human utterances would be removed.

Content, in addition to those set forth in Tier 1 above, without the guaranteed deployment of a Privacy Preserving Technique to enable product development, improvement, and support that cannot be accomplished with aggregated, transformed, or de-identified data.

☐ Check this box if Customer wants to help further improve Axon's services by participating in ACEIP Tier 2 in addition to Tier 1. Axon will not enroll Customer into ACEIP Tier 2 until Axon and Customer agree to terms in writing providing for such participation in ACEIP Tier 2.

Professional Services Appendix

If any of the Professional Services specified below are included on the Quote, this Appendix applies.

1. **Utilization of Services**. Customer must use professional services as outlined in the Quote and this Appendix within six (6) months of the Effective Date.

2. **Axon Full Service (Axon Full Service)**. Axon Full Service includes advance remote project planning and configuration support and up to four (4) consecutive days of on-site service and a professional services manager to work with Customer to assess Customer's deployment and determine which on-site services are appropriate. If Customer requires more than four (4) consecutive on-site days, Customer must purchase additional days. Axon Full Service options include:

System set up and configuration • Instructor-led setup of Axon View on smartphones (if applicable) • Configure categories and custom roles based on Customer need • Register cameras to Customer domain • Troubleshoot IT issues with Axon Evidence and Axon Dock ("**Dock**") access • One on-site session included
Dock configuration • Work with Customer to decide the ideal location of Docks and set configurations on Dock • Authenticate Dock with Axon Evidence using admin credentials from Customer • On-site assistance, not to include physical mounting of docks
Best practice implementation planning session • Provide considerations for the establishment of video policy and system operations best practices based on Axon's observations with other agencies • Discuss the importance of entering metadata in the field for organization purposes and other best practices for digital data management • Provide referrals of other agencies using the Axon camera devices and Axon Evidence • Recommend rollout plan based on review of shift schedules
System Admin and troubleshooting training sessions Step-by-step explanation and assistance for Customer's configuration of security, roles & permissions, categories & retention, and other specific settings for Axon Evidence
Axon instructor training (Train the Trainer) Training for Customer's in-house instructors who can support Customer's Axon camera and Axon Evidence training needs after Axon has fulfilled its contractual on-site obligations
Evidence sharing training Tailored workflow instruction for Investigative Units on sharing Cases and Evidence with local prosecuting agencies
End user go-live training and support sessions • Assistance with device set up and configuration • Training on device use, Axon Evidence, and Evidence Sync
Implementation document packet Axon Evidence administrator guides, camera implementation guides, network setup guide, sample policies, and categories & roles guide
Post go-live review

3. **Body-Worn Camera Starter Service (Axon Starter)**. Axon Starter includes advance remote project planning and configuration support and one (1) day of on-site Services and a professional services manager to work closely with Customer to assess Customer's deployment and determine which Services are appropriate. If Customer requires more than one (1) day of on-site Services, Customer must purchase additional on-site Services. The Axon Starter options include:

System set up and configuration (Remote Support)

• Instructor-led setup of Axon View on smartphones (if applicable) • Configure categories & custom roles based on Customer need • Troubleshoot IT issues with Axon Evidence and Dock access
Dock configuration • Work with Customer to decide the ideal location of Dock setup and set configurations on Dock • Authenticate Dock with Axon Evidence using "Administrator" credentials from Customer • Does not include physical mounting of docks
Axon instructor training (Train the Trainer) Training for Customer's in-house instructors who can support Customer's Axon camera and Axon Evidence training needs after Axon's has fulfilled its contracted on-site obligations
End user go-live training and support sessions • Assistance with device set up and configuration • Training on device use, Axon Evidence, and Evidence Sync
Implementation document packet Axon Evidence administrator guides, camera implementation guides, network setup guide, sample policies, and categories & roles guide

4. **Body-Worn Camera Virtual 1-Day Service (Axon Virtual)**. Axon Virtual includes all items in the BWC Starter Service Package, except one (1) day of on-site services.

5. **CEW Services Packages**. CEW Services Packages are detailed below:

System set up and configuration • Configure Axon Evidence categories & custom roles based on Customer need. • Troubleshoot IT issues with Axon Evidence. • Register users and assign roles in Axon Evidence. • **For the CEW Full Service Package**: On-site assistance included • **For the CEW Starter Package**: Virtual assistance included
Dedicated Project Manager Assignment of specific Axon representative for all aspects of planning the rollout (Project Manager). Ideally, Project Manager will be assigned to Customer 4–6 weeks before rollout
Best practice implementation planning session to include: • Provide considerations for the establishment of CEW policy and system operations best practices based on Axon's observations with other agencies • Discuss the importance of entering metadata and best practices for digital data management • Provide referrals to other agencies using TASER CEWs and Axon Evidence • **For the CEW Full Service Package:** On-site assistance included • **For the CEW Starter Package:** Virtual assistance included
System Admin and troubleshooting training sessions On-site sessions providing a step-by-step explanation and assistance for Customer's configuration of security, roles & permissions, categories & retention, and other specific settings for Axon Evidence
Axon Evidence Instructor training • Provide training on the Axon Evidence to educate instructors who can support Customer's subsequent Axon Evidence training needs. • **For the CEW Full Service Package:** Training for up to 3 individuals at Customer • **For the CEW Starter Package:** Training for up to 1 individual at Customer
TASER CEW inspection and device assignment Axon's on-site professional services team will perform functions check on all new TASER CEW Smart weapons and assign them to a user on Axon Evidence.
Post go-live review **For the CEW Full Service Package**: On-site assistance included. **For the CEW Starter Package**: Virtual assistance included.

6. **Smart Weapon Transition Service**. The Smart Weapon Transition Service includes:

Archival of CEW Firing Logs Axon's on-site professional services team will upload CEW firing logs to Axon Evidence from all TASER CEW

Smart Weapons that Customer is replacing with newer Smart Weapon models.
Return of Old Weapons Axon's on-site professional service team will ship all old weapons back to Axon's headquarters. Axon will provide Customer with a Certificate of Destruction

*Note: CEW Full Service packages for TASER 7 or TASER 10 include Smart Weapon Transition Service instead of 1-Day Device Specific Instructor Course.

7. **VR Services Package.** VR Service includes advance remote project planning and configuration support and one (1) day of on-site service and a professional services manager to work with Customer to assess Customer's deployment and determine which Services are appropriate. The VR Service training options include:

System set up and configuration (Remote Support) • Instructor-led setup of Axon VR headset content • Configure Customer settings based on Customer need • Troubleshoot IT issues with Axon VR headset
Axon instructor training (Train the Trainer) Training for up to five (5) Customer's in-house instructors who can support Customer's Axon VR CET and SIM training needs after Axon's has fulfilled its contracted on-site obligations
Classroom and practical training sessions Step-by-step explanation and assistance for Customer's configuration of Axon VR CET and SIM functionality, basic operation, and best practices

8. **Axon Air, On-Site Training.** Axon Air, On-Site training includes advance remote project planning and configuration support and one (1) day of on-site Services and a professional services manager to work closely with Customer to assess Customer's deployment and determine which Services are appropriate. If Customer's requires more than one (1) day of on-site Services, Customer must purchase additional on-site Services. The Axon Air, On-Site training options include:

System set up and configuration (Remote Support) • Instructor-led setup of Axon Air App (ASDS) • Configure Customer settings based on Customer need • Configure drone controller • Troubleshoot IT issues with Axon Evidence
Axon instructor training (Train the Trainer) Training for Customer's in-house instructors who can support Customer's Axon Air and Axon Evidence training needs after Axon's has fulfilled its contracted on-site obligations
Classroom and practical training sessions Step-by-step explanation and assistance for Customer's configuration of Axon Respond+ livestreaming functionality, basic operation, and best practices

9. **Axon Air, Virtual Training.** Axon Air, Virtual training includes all items in the Axon Air, On-Site Training Package, except the practical training session, with the Axon Instructor training for up to four hours virtually.

10. **Signal Sidearm Installation Service**.

    a. **Purchases of 50 SSA units or more**: Axon will provide one (1) day of on-site service and one professional services manager and will provide train the trainer instruction, with direct assistance on the first of each unique holster/mounting type. Customer is responsible for providing a suitable work/training area.

    b. **Purchases of less than 50 SSA units:** Axon will provide a 1-hour virtual instruction session on the basics of installation and device calibration.

11. **Out of Scope Services**. Axon is only responsible to perform the professional services described in the Quote and this Appendix. Any additional professional services are out of scope. The Parties must document scope changes in a written and signed change order. Changes may require an equitable adjustment in the charges or schedule.

12. **Delivery of Services**. Axon personnel will work Monday through Friday, 8:30 a.m. to 5:30 p.m., except holidays. Axon will perform all on-site tasks over a consecutive timeframe. Axon will not charge Customer travel time by Axon

personnel to Customer premises as work hours.

13. **Access Computer Systems to Perform Services**. Customer authorizes Axon to access relevant Customer computers and networks, solely for performing the Services. Axon will work to identify as soon as reasonably practicable resources and information Axon expects to use and will provide an initial itemized list to Customer. Customer is responsible for and assumes the risk of any problems, delays, losses, claims, or expenses resulting from the content, accuracy, completeness, and consistency of all data, materials, and information supplied by Customer.

14. **Site Preparation**. Axon will provide a hardcopy or digital copy of current user documentation for the Axon Devices ("**User Documentation**"). User Documentation will include all required environmental specifications for the professional services and Axon Devices to operate per the Axon Device User Documentation. Before installation of Axon Devices (whether performed by Customer or Axon), Customer must prepare the location(s) where Axon Devices are to be installed ("**Installation Site**") per the environmental specifications in the Axon Device User Documentation. Following installation, Customer must maintain the Installation Site per the environmental specifications. If Axon modifies Axon Device User Documentation for any Axon Devices under this Agreement, Axon will provide the update to Customer when Axon generally releases it

15. **Acceptance**. When Axon completes professional services, Axon will present an acceptance form ("**Acceptance Form**") to Customer. Customer will sign the Acceptance Form acknowledging completion. If Customer reasonably believes Axon did not complete the professional services in substantial conformance with this Agreement, Customer must notify Axon in writing of the specific reasons for rejection within seven (7) calendar days from delivery of the Acceptance Form. Axon will address the issues and re-present the Acceptance Form for signature. If Axon does not receive the signed Acceptance Form or written notification of reasons for rejection within seven (7) calendar days of delivery of the Acceptance Form, Axon will deem Customer to have accepted the professional services.

16. **Customer Network**. For work performed by Axon transiting or making use of Customer's network, Customer is solely responsible for maintenance and functionality of the network. In no event will Axon be liable for loss, damage, or corruption of Customer's network from any cause.

Technology Assurance Plan Appendix

If Technology Assurance Plan ("**TAP**") or a bundle including TAP is on the Quote, this appendix applies.

1. **TAP Warranty**. The TAP warranty is an extended warranty that starts at the end of the one- (1-) year hardware limited warranty.
2. **Officer Safety Plan**. If Customer purchases an Officer Safety Plan ("**OSP**"), Customer will receive the deliverables detailed in the Quote. Customer must accept delivery of the TASER CEW and accessories as soon as available from Axon.
3. **OSP 7 or OSP 10 Term**. OSP 7 or OSP 10 begins on the date specified in the Quote ("**OSP Term**").
4. **TAP BWC Upgrade**. If Customer has no outstanding payment obligations and purchased TAP, Axon will provide Customer a new Axon body-worn camera ("**BWC Upgrade**") as scheduled in the Quote. If Customer purchased TAP, Axon will provide a BWC Upgrade that is the same or like Axon Device, at Axon's option. Axon makes no guarantee the BWC Upgrade will utilize the same accessories or Axon dock.
5. **TAP Dock Upgrade**. If Customer has no outstanding payment obligations and purchased TAP, Axon will provide Customer a new Axon Dock as scheduled in the Quote ("**Dock Upgrade**"). Accessories associated with any Dock Upgrades are subject to change at Axon discretion. Dock Upgrades will only include a new Axon dock bay configuration unless a new Axon dock core is required for BWC compatibility. If Customer originally purchased a single-bay Axon dock, the Dock Upgrade will be a single-bay Axon dock model that is the same or like Axon Device, at Axon's option. If Customer originally purchased a multi-bay Axon dock, the Dock Upgrade will be a multi-bay Axon dock that is the same or like Axon Device, at Axon's option.
6. **Upgrade Delay**. Axon may ship the BWC and Dock Upgrades as scheduled in the Quote without prior confirmation from Customer unless the Parties agree in writing otherwise at least ninety (90) days in advance. Axon may ship the final BWC and Dock Upgrade as scheduled in the Quote sixty (60) days before the end of the Subscription Term without prior confirmation from Customer.
7. **Upgrade Change**. If Customer wants to upgrade Axon Device models from the current Axon Device to an upgraded Axon Device, Customer must pay the price difference between the MSRP for the current Axon Device and the MSRP for the upgraded Axon Device. If the model Customer desires has an MSRP less than the MSRP of the offered BWC Upgrade or Dock Upgrade, Axon will not provide a refund. The MSRP is the MSRP in effect at the time of the upgrade.
8. **Return of Original Axon Device**. Within thirty (30) days of receiving a BWC or Dock Upgrade, Customer must return the original Axon Devices to Axon or destroy the Axon Devices and provide a certificate of destruction to Axon including serial numbers for the destroyed Axon Devices. If Customer does not return or destroy the Axon Devices, Axon will deactivate the serial numbers for the Axon Devices received by Customer.
9. **Termination**. If Customer's payment for TAP, OSP, or Axon Evidence is more than thirty (30) days past due, Axon may terminate TAP or OSP. Once TAP or OSP terminates for any reason:
   - 9.1. TAP and OSP coverage terminate as of the date of termination and no refunds will be given.
   - 9.2. Axon will not and has no obligation to provide the Upgrade Models.
   - 9.3. Customer must make any missed payments due to the termination before Customer may purchase any future TAP or OSP.

TASER Device Appendix

This TASER Device Appendix applies to Customer's TASER 7/10, OSP 7/10, OSP Plus, or OSP 7/10 Plus Premium purchase from Axon, if applicable.

1. **Duty Cartridge Replenishment Plan**. If the Quote includes "**Duty Cartridge Replenishment Plan**", Customer must purchase the plan for each CEW user. A CEW user includes officers that use a CEW in the line of duty and those that only use a CEW for training. Customer may not resell cartridges received. Axon will only replace cartridges used in the line of duty.

2. **Training**. If the Quote includes a TASER On Demand Certification subscription, Customer will have on-demand access to TASER Instructor and TASER Master Instructor courses only for the duration of the TASER Subscription Term. Axon will issue a maximum of ten (10) TASER Instructor vouchers and ten (10) TASER Master Instructor vouchers for every thousand TASER Subscriptions purchased. Customer shall utilize vouchers to register for TASER courses at their discretion however Customer may incur a fee for cancellations less than 10 business days prior to a course date or failure to appear to a registered course. The voucher has no cash value. Customer cannot exchange voucher for any other device or service. Any unused vouchers at the end of the Term will be forfeited. A voucher does not include any travel or other expenses that might be incurred related to attending a course.

3. **Extended Warranty**. If the Quote includes an extended warranty, the extended warranty coverage period warranty will be for a five- (5-) year term, which includes the hardware manufacturer's warranty plus the four- (4-) year extended term.

4. **Trade-in**. If the Quote contains a discount on CEW-related line items and that discount is contingent upon the trade-in of hardware, Customer must return used hardware and accessories associated with the discount ("**Trade-In Units**") to Axon within the below prescribed timeline. Customer must ship batteries via ground shipping. Axon will pay shipping costs of the return. If Axon does not receive Trade-In Units within the timeframe below, Axon will invoice Customer the value of the trade-in credit. Customer may not destroy Trade-In Units and receive a trade-in credit.

Customer Size	**Days to Return from Start Date of TASER 10 Subscription**
Less than 100 officers	60 days
100 to 499 officers	90 days
500+ officers	180 days

5. **TASER Device Subscription Term**. The TASER Device Subscription Term for a standalone TASER Device purchase begins on shipment of the TASER Device. The TASER Device Subscription Term for OSP 7/10 begins on the OSP 7/10 start date.

6. **Access Rights**. Upon Axon granting Customer a TASER Device Axon Evidence subscription, Customer may access and use Axon Evidence for the storage and management of data from TASER Devices devices during the TASER Device Subscription Term. Customer may not exceed the number of end users the Quote specifies.

7. **Customer Warranty.** If Customer is located in the US, Customer warrants and acknowledges that TASER 10 is classified as a firearm and is being acquired for official Customer use pursuant to a law enforcement Customer transfer under the Gun Control Act of 1968.

8. **Purchase Order.** To comply with applicable laws and regulations, Customer must provide a purchase order to Axon prior to shipment of TASER 10.

9. **Apollo Grant (US only).** If Customer has received an Apollo Grant from Axon, Customer must pay all fees in the Quote prior to upgrading to any new TASER Device offered by Axon.

10. **Termination**. If payment for TASER Device is more than thirty (30) days past due, Axon may terminate Customer's TASER Device plan by notifying Customer. Upon termination for any reason, then as of the date of termination:

    10.1. TASER Device extended warranties and access to Training Content will terminate. No refunds will be given.
    10.2. Axon will invoice Customer the remaining MSRP for TASER Devices received before termination. If terminating for non-appropriations, Axon will not invoice Customer if Customer returns the TASER Device, rechargeable battery, holster, dock, core, training suits, and unused cartridges to Axon within thirty (30) days of the date of

termination.

10.3. Customer will be responsible for payment of any missed payments due to the termination before being allowed to purchase any future TASER Device plan.

Axon Auto-Tagging Appendix

If Auto-Tagging is included on the Quote, this Appendix applies.

1. **Scope.** Axon Auto-Tagging consists of the development of a module to allow Axon Evidence to interact with Customer's Computer-Aided Dispatch ("**CAD**") or Records Management Systems ("**RMS**"). This allows end users to auto-populate Axon video meta-data with a case ID, category, and location-based on data maintained in Customer's CAD or RMS.

2. **Support**. For thirty (30) days after completing Auto-Tagging Services, Axon will provide up to five (5) hours of remote support at no additional charge. Axon will provide free support due to a change in Axon Evidence, if Customer maintains an Axon Evidence and Auto-Tagging subscription. Axon will not provide support if a change is required because Customer changes its CAD or RMS.

3. **Changes**. Axon is only responsible to perform the Services in this Appendix. Any additional Services are out of scope. The Parties must document scope changes in a written and signed change order. Changes may require an equitable adjustment in fees or schedule.

4. **Customer Responsibilities**. Axon's performance of Auto-Tagging Services requires Customer to:

   4.1. Make available relevant systems, including Customer's current CAD or RMS, for assessment by Axon (including remote access if possible);

   4.2. Make required modifications, upgrades or alterations to Customer's hardware, facilities, systems and networks related to Axon's performance of Auto-Tagging Services;

   4.3. Provide access to the premises where Axon is performing Auto-Tagging Services, subject to Customer safety and security restrictions, and allow Axon to enter and exit the premises with laptops and materials needed to perform Auto-Tagging Services;

   4.4. Provide all infrastructure and software information (TCP/IP addresses, node names, network configuration) necessary for Axon to provide Auto-Tagging Services;

   4.5. Promptly install and implement any software updates provided by Axon;

   4.6. Ensure that all appropriate data backups are performed;

   4.7. Provide assistance, participation, and approvals in testing Auto-Tagging Services;

   4.8. Provide Axon with remote access to Customer's Axon Evidence account when required;

   4.9. Notify Axon of any network or machine maintenance that may impact the performance of the module at Customer; and

   4.10. Ensure reasonable availability of knowledgeable staff and personnel to provide timely, accurate, complete, and up-to-date documentation and information to Axon.

5. **Access to Systems**. Customer authorizes Axon to access Customer's relevant computers, network systems, and CAD or RMS solely for performing Auto-Tagging Services. Axon will work diligently to identify the resources and information Axon expects to use and will provide an initial list to Customer. Customer is responsible for and assumes the risk of any problems, delays, losses, claims, or expenses resulting from the content, accuracy, completeness, and consistency of all data, materials, and information supplied by Customer.

Axon Fleet Appendix

If Axon Fleet is included on the Quote, this Appendix applies.

1. Customer Responsibilities.

   1.1. Customer must ensure its infrastructure and vehicles adhere to the minimum requirements to operate Axon Fleet 2 Axon Fleet 3 or a future Fleet iteration (collectively, "**Axon Fleet**") as established by Axon during the qualifier call and on-site assessment at Customer and in any technical qualifying questions. If Customer's representations are inaccurate, the Quote is subject to change.

   1.2. Customer is responsible for providing a suitable work area for Axon or Axon third-party providers to install Axon Fleet systems into Customer vehicles. Customer is responsible for making available all vehicles for which installation services were purchased, during the agreed upon onsite installation dates, Failure to make vehicles available may require an equitable adjustment in fees or schedule.

2. **Cradlepoint**. If Customer purchases Cradlepoint Enterprise Cloud Manager, Customer will comply with Cradlepoint's end user license agreement. The term of the Cradlepoint license may differ from the Axon Evidence Subscription. If Customer requires Cradlepoint support, Customer will contact Cradlepoint directly.

3. **Third-party Installer**. Axon will not be liable for the failure of Axon Fleet hardware to operate per specifications if such failure results from installation not performed by, or as directed by Axon.

4. Wireless Offload Server.

   4.1. **License Grant**. Axon grants Customer a non-exclusive, royalty-free, worldwide, perpetual license to use Wireless Offload Server ("**WOS**"). "Use" means storing, loading, installing, or executing WOS solely for data communication with Axon Devices for the number of licenses purchased. The WOS term begins upon the start of the Axon Evidence Subscription.

   4.2. **Restrictions**. Customer may not: (a) modify, alter, tamper with, repair, or create derivative works of WOS; (b) reverse engineer, disassemble, or decompile WOS, apply any process to derive the source code of WOS, or allow others to do so; (c) access or use WOS to avoid incurring fees or exceeding usage limits; (d) copy WOS in whole or part; (e) use trade secret information contained in WOS; (f) resell, rent, loan or sublicense WOS; (g) access WOS to build a competitive device or service or copy any features, functions or graphics of WOS; or (h) remove, alter or obscure any confidentiality or proprietary rights notices (including copyright and trademark notices) of Axon or Axon's licensors on or within WOS.

   4.3. **Updates**. If Customer purchases WOS maintenance, Axon will make updates and error corrections to WOS ("**WOS Updates**") available electronically via the Internet or media as determined by Axon. Customer is responsible for establishing and maintaining adequate Internet access to receive WOS Updates and maintaining computer equipment necessary for use of WOS. The Quote will detail the maintenance term.

   4.4. **WOS Support**. Upon request by Axon, Customer will provide Axon with access to Customer's store and forward servers solely for troubleshooting and maintenance.

5. Axon Vehicle Software.

   5.1. **License Grant**. Axon grants Customer a non-exclusive, royalty-free, worldwide, perpetual license to use ViewXL or Dashboard (collectively, "**Axon Vehicle Software**".) "Use" means storing, loading, installing, or executing Axon Vehicle Software solely for data communication with Axon Devices. The Axon Vehicle Software term begins upon the start of the Axon Evidence Subscription.

   5.2. **Restrictions**. Customer may not: (a) modify, alter, tamper with, repair, or create derivative works of Axon Vehicle Software; (b) reverse engineer, disassemble, or decompile Axon Vehicle Software, apply any process to derive the source code of Axon Vehicle Software, or allow others to do so; (c) access or use Axon Vehicle Software to avoid incurring fees or exceeding usage limits; (d) copy Axon Vehicle Software in whole or part; (e) use trade secret information contained in Axon Vehicle Software; (f) resell, rent, loan or sublicense Axon Vehicle Software; (g) access Axon Vehicle Software to build a competitive device or service or copy any features, functions or graphics of Axon Vehicle Software; or (h) remove, alter or obscure any confidentiality or proprietary rights notices (including copyright and trademark notices) of Axon or Axon's licensors on or within Axon Vehicle Software.

6. **Acceptance Checklist**. If Axon provides services to Customer pursuant to any statement of work in connection with Axon Fleet, within seven (7) days of the date on which Customer retrieves Customer's vehicle(s) from the Axon installer, said vehicle having been installed and configured with tested and fully and properly operational in-car hardware and software identified above, Customer will receive a Professional Services Acceptance Checklist to submit to Axon indicating acceptance or denial of said deliverables.

7. **Axon Fleet Upgrade**. If Customer has no outstanding payment obligations and has purchased the "Fleet Technology Assurance Plan" (Fleet TAP), Axon will provide Customer with the same or like model of Fleet hardware ("**Axon Fleet Upgrade**") as scheduled on the Quote.

   7.1. If Customer would like to change models for the Axon Fleet Upgrade, Customer must pay the difference between the MSRP for the offered Axon Fleet Upgrade and the MSRP for the model desired. The MSRP is the MSRP in effect at the time of the upgrade. Customer is responsible for the removal of previously installed hardware and installation of the Axon Fleet Upgrade.

   7.2. Within thirty (30) days of receiving the Axon Fleet Upgrade, Customer must return the original Axon Devices to Axon or destroy the Axon Devices and provide a certificate of destruction to Axon, including serial numbers of the destroyed Axon Devices. If Customer does not destroy or return the Axon Devices to Axon, Axon will deactivate the serial numbers for the Axon Devices received by Customer.

8. **Axon Fleet Termination.** Axon may terminate Customer's Fleet subscription for non-payment. Upon any termination:

   8.1. Axon Fleet subscription coverage terminates, and no refunds will be given.

   8.2. Axon will not and has no obligation to provide the Axon Fleet Upgrade.

   8.3. Customer will be responsible for payment of any missed payments due to the termination before being allowed to purchase any future Fleet TAP.

Axon Respond Appendix

This Axon Respond Appendix applies to both Axon Respond and Axon Respond Plus, if either is included on the Quote.

1. **Axon Respond Subscription Term**. If Customer purchases Axon Respond as part of a bundled offering, the Axon Respond subscription begins on the later of the (1) start date of that bundled offering, or (2) date Axon provisions Axon Respond to Customer. If Customer purchases Axon Respond as a standalone, the Axon Respond subscription begins the later of the (1) date Axon provisions Axon Respond to Customer, or (2) first day of the month following the Effective Date. The Axon Respond subscription term will end upon the completion of the Axon Evidence Subscription associated with Axon Respond.

2. **Scope of Axon Respond**. The scope of Axon Respond is to assist Customer with real-time situational awareness during critical incidents to improve officer safety, effectiveness, and awareness. In the event Customer uses Axon Respond outside this scope, Axon may initiate good-faith discussions with Customer on upgrading Customer's Axon Respond to better meet Customer's needs.

3. **Axon Body LTE Requirements**. Axon Respond is only available and usable with an LTE enabled body-worn camera. Axon is not liable if Customer utilclzes the LTE device outside of the coverage area or if the LTE carrier is unavailable. LTE coverage is only available in the United States, including any U.S. territories. Axon may utilize a carrier of Axon's choice to provide LTE service. Axon may change LTE carriers during the Term without Customer's consent.

4. **Axon Fleet LTE Requirements.** Axon Respond is only available and usable with a Fleet system configured with LTE modem and service. Customer is responsible for providing LTE service for the modem. Coverage and availability of LTE service is subject to Customer's LTE carrier.

5. **Axon Respond Service Limitations**. Customer acknowledges that LTE service is made available only within the operating range of the networks. Service may be temporarily refused, interrupted, or limited because of: (a) facilities limitations; (b) transmission limitations caused by atmospheric, terrain, other natural or artificial conditions adversely affecting transmission, weak batteries, system overcapacity, movement outside a service area or gaps in coverage in a service area, and other causes reasonably outside of the carrier's control such as intentional or negligent acts of third parties that damage or impair the network or disrupt service; or (c) equipment modifications, upgrades, relocations, repairs, and other similar activities necessary for the proper or improved operation of service.

   5.1. With regard to Axon Body, Partner networks are made available as-is and the carrier makes no warranties or representations as to the availability or quality of roaming service provided by carrier partners, and the carrier will not be liable in any capacity for any errors, outages, or failures of carrier partner networks. Customer expressly understands and agrees that it has no contractual relationship whatsoever with the underlying wireless service provider or its affiliates or contractors and Customer is not a third-party beneficiary of any agreement between Axon and the underlying carrier.

6. **Termination**. Upon termination of this Agreement, or if Customer stops paying for Axon Respond or bundles that include Axon Respond, Axon will end Axon Respond services, including any Axon-provided LTE service.

Add-on Services Appendix

This Appendix applies if Axon Community Request, Axon Redaction Assistant, and/or Axon Performance are included on the Quote.

1. **Subscription Term**. If Customer purchases Axon Community Request, Axon Redaction Assistant, or Axon Performance as part of OSP 7 or OSP 10, the subscription begins on the later of the (1) start date of the OSP 7 or OSP 10 Term, or (2) date Axon provisions Axon Community Request Axon Redaction Assistant, or Axon Performance to Customer.

1.1. If Customer purchases Axon Community Request, Axon Redaction Assistant, or Axon Performance as a standalone, the subscription begins the later of the (1) date Axon provisions Axon Community Request, Axon Redaction Assistant, or Axon Performance to Customer, or (2) first day of the month following the Effective Date.

1.2. The subscription term will end upon the completion of the Axon Evidence Subscription associated with the add-on.

2. **Axon Community Request Storage**. For Axon Community Request, Customer may store an unlimited amount of data submitted through the public portal ("**Portal Content**"), within Customer's Axon Evidence instance. The post-termination provisions outlined in the Axon Cloud Services Terms of Use Appendix also apply to Portal Content.

3. **Performance Auto-Tagging Data**. In order to provide some features of Axon Performance to Customer, Axon will need to store call for service data from Customer's CAD or RMS.

Axon Virtual Reality Content Terms of Use Appendix

If Virtual Reality is included on the Quote, this Appendix applies.

1. **Term**. The Quote will detail the products and license duration, as applicable, of the goods, services, and software, and contents thereof, provided by Axon to Customer related to virtual reality (collectively, "**Virtual Reality Media**").

2. **Headsets**. Customer may purchase additional virtual reality headsets from Axon. In the event Customer decides to purchase additional virtual reality headsets for use with Virtual Reality Media, Customer must purchase those headsets from Axon.

3. **License Restrictions**. All licenses will immediately terminate if Customer does not comply with any term of this Agreement. If Customer utilizes more users than stated in this Agreement, Customer must purchase additional Virtual Reality Media licenses from Axon. Customer may not use Virtual Reality Media for any purpose other than as expressly permitted by this Agreement. Customer may not:

   3.1. modify, tamper with, repair, or otherwise create derivative works of Virtual Reality Media;

   3.2. reverse engineer, disassemble, or decompile Virtual Reality Media or apply any process to derive the source code of Virtual Reality Media, or allow others to do the same;

   3.3. copy Virtual Reality Media in whole or part, except as expressly permitted in this Agreement;

   3.4. use trade secret information contained in Virtual Reality Media;

   3.5. resell, rent, loan or sublicense Virtual Reality Media;

   3.6. access Virtual Reality Media to build a competitive device or service or copy any features, functions, or graphics of Virtual Reality Media; or

   3.7. remove, alter, or obscure any confidentiality or proprietary rights notices (including copyright and trademark notices) of Axon or Axon's licensors on or within Virtual Reality Media or any copies of Virtual Reality Media.

4. **Privacy**. Customer's use of the Virtual Reality Media is subject to the Axon Virtual Reality Privacy Policy, a current version of which is available at https://www.axon.com/axonvrprivacypolicy.

5. **Termination**. Axon may terminate Customer's license immediately for Customer's failure to comply with any of the terms in this Agreement.

Axon Application Programming Interface Appendix

This Appendix applies if Axon's API Services or a subscription to Axon Cloud Services is included on the Quote.

1. **Definitions**.

   1.1. "**API Client**" means the software that acts as the interface between Customer's computer and the server, which is already developed or to be developed by Customer.

   1.2. "**API Interface**" means software implemented by Customer to configure Customer's independent API Client Software to operate in conjunction with the API Service for Customer's authorized Use.

   1.3. "**Axon Evidence Partner API, API or Axon API**" (collectively "**API Service**") means Axon's API which provides a programmatic means to access data in Customer's Axon Evidence account or integrate Customer's Axon Evidence account with other systems.

   1.4. "**Use**" means any operation on Customer's data enabled by the supported API functionality.

2. **Purpose and License**.

   2.1. Customer may use API Service and data made available through API Service, in connection with an API Client developed by Customer. Axon may monitor Customer's use of API Service to ensure quality, improve Axon devices and services, and verify compliance with this Agreement. Customer agrees to not interfere with such monitoring or obscure from Axon Customer's use of API Service. Customer will not use API Service for commercial use.

   2.2. Axon grants Customer a non-exclusive, non-transferable, non-sublicensable, worldwide, revocable right and license during the Term to use API Service, solely for Customer's Use in connection with Customer's API Client.

   2.3. Axon reserves the right to set limitations on Customer's use of the API Service, such as a quota on operations, to ensure stability and availability of Axon's API. Axon will use reasonable efforts to accommodate use beyond the designated limits.

3. **Configuration**. Customer will work independently to configure Customer's API Client with API Service for Customer's applicable Use. Customer will be required to provide certain information (such as identification or contact details) as part of the registration. Registration information provided to Axon must be accurate. Customer will inform Axon promptly of any updates. Upon Customer's registration, Axon will provide documentation outlining API Service information.

4. **Customer Responsibilities**. When using API Service, Customer and its end users may not:

   4.1. use API Service in any way other than as expressly permitted under this Agreement;

   4.2. use in any way that results in, or could result in, any security breach to Axon;

   4.3. perform an action with the intent of introducing any viruses, worms, defect, Trojan horses, malware, or any items of a destructive nature to Axon Devices and Services;

   4.4. interfere with, modify, disrupt or disable features or functionality of API Service or the servers or networks providing API Service;

   4.5. reverse engineer, decompile, disassemble, or translate or attempt to extract the source code from API Service or any related software;

   4.6. create an API Interface that functions substantially the same as API Service and offer it for use by third parties;

   4.7. provide use of API Service on a service bureau, rental or managed services basis or permit other individuals or entities to create links to API Service;

   4.8. frame or mirror API Service on any other server, or wireless or Internet-based device;

   4.9. make available to a third-party, any token, key, password or other login credentials to API Service;

   4.10. take any action or inaction resulting in illegal, unauthorized or improper purposes; or

   4.11. disclose Axon's API manual.

5. **API Content**. All content related to API Service, other than Customer Content or Customer's API Client content, is considered Axon's API Content, including:

5.1. the design, structure and naming of API Service fields in all responses and requests;

5.2. the resources available within API Service for which Customer takes actions on, such as evidence, cases, users, or reports;

5.3. the structure of and relationship of API Service resources; and

5.4. the design of API Service, in any part or as a whole.

6. **Prohibitions on API Content**. Neither Customer nor its end users will use API content returned from the API Interface to:

6.1. scrape, build databases, or otherwise create permanent copies of such content, or keep cached copies longer than permitted by the cache header;

6.2. copy, translate, modify, create a derivative work of, sell, lease, lend, convey, distribute, publicly display, or sublicense to any third-party;

6.3. misrepresent the source or ownership; or

6.4. remove, alter, or obscure any confidentiality or proprietary rights notices (including copyright and trademark notices).

7. **API Updates**. Axon may update or modify the API Service from time to time ("**API Update**"). Customer is required to implement and use the most current version of API Service and to make any applicable changes to Customer's API Client required as a result of such API Update. API Updates may adversely affect how Customer's API Client access or communicate with API Service or the API Interface. Each API Client must contain means for Customer to update API Client to the most current version of API Service. Axon will provide support for one (1) year following the release of an API Update for all depreciated API Service versions.

Axon Investigate Appendix

If the Quote includes Axon's On Prem Video Suite known as Axon Investigate or Third Party Video Support License, the following appendix shall apply.

1. **License Grant**. Subject to the terms and conditions specified below and upon payment of the applicable fees set forth in the Quote, Axon grants to Customer a nonexclusive, nontransferable license to install, use, and display the Axon Investigate software ("**Software**") solely for its own internal use only and for no other purpose, for the duration of subscription term set forth in the Quote. This Agreement does not grant Customer any right to enhancements or updates, but if such are made available to Customer and obtained by Customer they shall become part of the Software and governed by the terms of this Agreement.

2. **Third-Party Licenses**. Axon licenses several third-party codecs and applications that are integrated into the Software. Users with an active support contract with Axon are granted access to these additional features. By accepting this agreement, Customer agrees to and understands that an active support contract is required for all of the following features: DNxHD output formats, decoding files via the "fast indexing" method, proprietary file metadata, telephone and email support, and all future updates to the software. If Customer terminates the annual support contract with Axon, the features listed above will be disabled within the Software. It is recommended that users remain on an active support contract to maintain the full functionality of the Software.

3. **Restrictions on Use**. Customer may not permit any other person to use the Software unless such use is in accordance with the terms of this Agreement. Customer may not modify, translate, reverse engineer, reverse compile, decompile, disassemble or create derivative works with respect to the Software, except to the extent applicable laws specifically prohibit such restrictions. Customer may not rent, lease, sublicense, grant a security interest in or otherwise transfer Customer's rights to or to use the Software. Any rights not granted are reserved to Axon.

4. **Term**. For purchased perpetual Licenses only—excluding Licenses leased for a pre-determined period, evaluation licenses, companion licenses, as well as temporary licenses--the license shall be perpetual unless Customer fails to observe any of its terms, in which case it shall terminate immediately, and without additional prior notice. The terms of Paragraphs 1, 2, 3, 5, 6, 8 and 9 shall survive termination of this Agreement. For licenses leased for a pre-determined period, for evaluation licenses, companion licenses, as well as temporary licenses, the license is granted for a period beginning at the installation date and for the duration of the evaluation period or temporary period as agreed between Axon and Customer.

5. **Title**. Axon and its licensors shall have sole and exclusive ownership of all right, title, and interest in and to the Software and all changes, modifications, and enhancements thereof (including ownership of all trade secrets and copyrights pertaining thereto), regardless of the form or media in which the original or copies may exist, subject only to the rights and privileges expressly granted by Axon. This Agreement does not provide Customer with title or ownership of the Software, but only a right of limited use.

6. **Copies**. The Software is copyrighted under the laws of the United States and international treaty provisions. Customer may not copy the Software except for backup or archival purposes, and all such copies shall contain all Axon's notices regarding proprietary rights as contained in the Software as originally provided to Customer. If Customer receives one copy electronically and another copy on media, the copy on media may be used only for archival purposes and this license does not authorize Customer to use the copy of media on an additional server.

7. **Actions Required Upon Termination**. Upon termination of the license associated with this Agreement, Customer agrees to destroy all copies of the Software and other text and/or graphical documentation, whether in electronic or printed format, that describe the features, functions and operation of the Software that are provided by Axon to Customer ("**Software Documentation**") or return such copies to Axon. Regarding any copies of media containing regular backups of Customer's computer or computer system, Customer agrees not to access such media for the purpose of recovering the Software or online Software Documentation.

8. **Export Controls**. None of the Software, Software Documentation or underlying information may be downloaded or otherwise exported, directly or indirectly, without the prior written consent, if required, of the office of Export Administration of the United States, Department of Commerce, nor to any country to which the U.S. has embargoed goods, to any person on the U.S. Treasury Department's list of Specially Designated Nations, or the U.S. Department of Commerce's Table of Denials.

9. **U.S. Government Restricted Rights**. The Software and Software Documentation are Commercial Computer Software provided with Restricted Rights under Federal Acquisition Regulations and Customer supplements to them. Use, duplication or disclosure by the U.S. Government is subject to restrictions as set forth in subparagraph (c)(1)(ii) of the Rights in Technical Data and Computer Software clause at DFAR 255.227-7013 et. Seq. or 252.211-7015, or

subparagraphs (a) through (d) of the Commercial Computer Software Restricted Rights at FAR 52.227-19, as applicable, or similar clauses in the NASA FAR Supplement. Contractor/manufacturer is Axon Enterprise, Inc., 17800 North 85th Street, Scottsdale, Arizona 85255.

Axon Event Offer Appendix

If the Agreement includes the provision of, or Axon otherwise offers, ticket(s), travel and/or accommodation for select events hosted by Axon ("Axon Event"), the following shall apply:

1. **General**. Subject to the terms and conditions specified below and those in the Agreement, Axon may provide Customer with one or more offers to fund Axon Event ticket(s), travel and/or accommodation for Customer-selected employee(s) to attend one or more Axon Events. By entering into the Agreement, Customer warrants that it is appropriate and permissible for Customer to receive the referenced Axon Event offer(s) based on Customer's understanding of the terms and conditions outlined in this Axon Event Offer Appendix.

2. **Attendee/Employee Selection**. Customer shall have sole and absolute discretion to select the Customer employee(s) eligible to receive the ticket(s), travel and/or accommodation that is the subject of any Axon Event offer(s).

3. **Compliance**. It is the intent of Axon that any and all Axon Event offers comply with all applicable laws, regulations and ethics rules regarding contributions, including gifts and donations. Axon's provision of ticket(s), travel and/or accommodation for the applicable Axon Event to Customer is intended for the use and benefit of Customer in furtherance of its goals, and not the personal use or benefit of any official or employee of Customer. Axon makes this offer without seeking promises or favoritism for Axon in any bidding arrangements. Further, no exclusivity will be expected by either party in consideration for the offer. Axon makes the offer with the understanding that it will not, as a result of such offer, be prohibited from any procurement opportunities or be subject to any reporting requirements. If Customer's local jurisdiction requires Customer to report or disclose the fair market value of the benefits provided by Axon, Customer shall promptly contact Axon to obtain such information, and Axon shall provide the information necessary to facilitate Customer's compliance with such reporting requirements.

4. **Assignability**. Customer may not sell, transfer, or assign Axon Event ticket(s), travel and/or accommodation provided under the Agreement.

5. **Availability.** The provision of all offers of Axon Event ticket(s), travel and/or accommodation is subject to availability of funds and resources. Axon has no obligation to provide Axon Event ticket(s), travel and/or accommodation.

6. **Revocation of Offer**. Axon reserves the right at any time to rescind the offer of Axon Event ticket(s), travel and/or accommodation to Customer if Customer or its selected employees fail to meet the prescribed conditions or if changes in circumstances render the provision of such benefits impractical, inadvisable, or in violation of any applicable laws, regulations, and ethics rules regarding contributions, including gifts and donations

Docusign Envelope ID: D4A6BDD0-1323-4970-B4BD-D86ADBDFF0D3

Axon Enterprise, Inc.
17800 N 85th St.
Scottsdale, Arizona 85255
United States
VAT: 86-0741227
Domestic: (800) 978-2737
International: +1.800.978.2737

Q-563002-45588.697BM

Issued: 10/23/2024

Quote Expiration: 12/31/2024

Estimated Contract Start Date: 02/15/2025

Account Number: 105756

Payment Terms: N30

Delivery Method:

SHIP TO	BILL TO
Pueblo Police Department - CO 200 S Main St Pueblo, CO 81003-3525 USA	Pueblo Police Department - CO 200 S Main St Pueblo CO 81003-3525 USA Email:

SALES REPRESENTATIVE	PRIMARY CONTACT
Brian Moutinho Phone: +1 9168062275 Email: bmoutinho@axon.com Fax:	James Martin Phone: (719) 549-1200 Email: jmartin@pueblo.us Fax: (719) 5532479

Quote Summary

Program Length	60 Months
TOTAL COST	$4,126,779.60
ESTIMATED TOTAL W/ TAX	$4,126,779.60

Discount Summary

Average Savings Per Year	$504,974.30
TOTAL SAVINGS	$2,524,871.50

Payment Summary

Date	Subtotal	Tax	Total
Jan 2025	$825,355.92	$0.00	$825,355.92
Jan 2026	$825,355.92	$0.00	$825,355.92
Jan 2027	$825,355.92	$0.00	$825,355.92
Jan 2028	$825,355.92	$0.00	$825,355.92
Jan 2029	$825,355.92	$0.00	$825,355.92
Total	**$4,126,779.60**	**$0.00**	**$4,126,779.60**

Quote Unbundled Price:	**$6,651,651.10**
Quote List Price:	**$5,194,777.90**
Quote Subtotal:	**$4,126,779.60**

Pricing

All deliverables are detailed in Delivery Schedules section lower in proposal

Item	Description	Qty	Term	Unbundled	List Price	Net Price	Subtotal	Tax	Total
Program									
B00022	BUNDLE - UNLIMITED PLUS	33	60	$303.82	$238.32	$191.53	$379,229.40	$0.00	$379,229.40
M00012	BUNDLE - OFFICER SAFETY PLAN 10 PLUS	238	60	$390.84	$297.90	$253.74	$3,623,407.20	$0.00	$3,623,407.20
A la Carte Hardware									
H00002	AB4 Multi Bay Dock Bundle	35			$1,638.90	$0.00	$0.00	$0.00	$0.00
H00001	AB4 Camera Bundle	271			$849.00	$0.00	$0.00	$0.00	$0.00
A la Carte Software									
85759	AXON AUTO-TRANSCRIBE - MINUTES - A-LA-CARTE 1000	10	60		$32.98	$0.00	$0.00	$0.00	$0.00
BasicLicense	Basic License Bundle	34	60		$16.27	$16.25	$33,150.00	$0.00	$33,150.00
ProLicense	Pro License Bundle	35	60		$43.40	$43.33	$90,993.00	$0.00	$90,993.00
A la Carte Services									
85144	AXON BODY - PSO - STARTER	1			$13,000.00	$0.00	$0.00	$0.00	$0.00
99901	AXON ACCELERATE CONFERENCE REGISTRATION	3			$849.00	$0.00	$0.00	$0.00	$0.00
75014	AXON SIGNAL - PSO - INSTALLATION SERVICE ONSITE	1			$3,000.00	$0.00	$0.00	$0.00	$0.00
101267	AXON VR - PSO - FULL INSTALLATION	1			$12,000.00	$0.00	$0.00	$0.00	$0.00
85149	AXON TASER - 2 DAY PRODUCT SPECIFIC INSTRUCTOR COURSE	1			$6,786.00	$0.00	$0.00	$0.00	$0.00
Total							**$4,126,779.60**	**$0.00**	**$4,126,779.60**

Delivery Schedule

Hardware

Bundle	Item	Description	QTY	Shipping Location	Estimated Delivery Date
AB4 Camera Bundle	100147	AXON BODY 4 - CAMERA - NA US FIRST RESPONDER BLK RAPIDLOCK	271	1	01/15/2025
AB4 Camera Bundle	100147	AXON BODY 4 - CAMERA - NA US FIRST RESPONDER BLK RAPIDLOCK	8	1	01/15/2025
AB4 Camera Bundle	100466	AXON BODY 4 - CABLE - USB-C TO USB-C	299	1	01/15/2025
AB4 Camera Bundle	74028	AXON BODY - MOUNT - WING CLIP RAPIDLOCK	299	1	01/15/2025
AB4 Multi Bay Dock Bundle	100206	AXON BODY 4 - 8 BAY DOCK	35	1	01/15/2025
AB4 Multi Bay Dock Bundle	70033	AXON - DOCK WALL MOUNT - BRACKET ASSY	35	1	01/15/2025
AB4 Multi Bay Dock Bundle	71019	AXON BODY - DOCK POWERCORD - NORTH AMERICA	35	1	01/15/2025
BUNDLE - OFFICER SAFETY PLAN 10 PLUS	100126	AXON VR - TACTICAL BAG	10	1	01/15/2025
BUNDLE - OFFICER SAFETY PLAN 10 PLUS	100390	AXON TASER 10 - HANDLE - YELLOW CLASS 3R	238	2	01/15/2025
BUNDLE - OFFICER SAFETY PLAN 10 PLUS	100390	AXON TASER 10 - HANDLE - YELLOW CLASS 3R	7	2	01/15/2025
BUNDLE - OFFICER SAFETY PLAN 10 PLUS	100393	AXON TASER 10 - MAGAZINE - LIVE DUTY BLACK	238	1	01/15/2025
BUNDLE - OFFICER SAFETY PLAN 10 PLUS	100393	AXON TASER 10 - MAGAZINE - LIVE DUTY BLACK	7	1	01/15/2025

Hardware

Bundle	Item	Description	QTY	Shipping Location	Estimated Delivery Date
BUNDLE - OFFICER SAFETY PLAN 10 PLUS	100394	AXON TASER 10 - MAGAZINE - HALT TRAINING BLUE	16	1	01/15/2025
BUNDLE - OFFICER SAFETY PLAN 10 PLUS	100395	AXON TASER 10 - MAGAZINE - LIVE TRAINING PURPLE	12	1	01/15/2025
BUNDLE - OFFICER SAFETY PLAN 10 PLUS	100396	AXON TASER 10 - MAGAZINE - INERT RED	30	1	01/15/2025
BUNDLE - OFFICER SAFETY PLAN 10 PLUS	100399	AXON TASER 10 - CARTRIDGE - LIVE	4760	1	01/15/2025
BUNDLE - OFFICER SAFETY PLAN 10 PLUS	100400	AXON TASER 10 - CARTRIDGE - HALT	1430	1	01/15/2025
BUNDLE - OFFICER SAFETY PLAN 10 PLUS	100401	AXON TASER 10 - CARTRIDGE - INERT	300	1	01/15/2025
BUNDLE - OFFICER SAFETY PLAN 10 PLUS	100611	AXON TASER 10 - SAFARILAND HOLSTER - RH	238	1	01/15/2025
BUNDLE - OFFICER SAFETY PLAN 10 PLUS	100623	AXON TASER - TRAINING - ENHANCED HALT SUIT V2	4	1	01/15/2025
BUNDLE - OFFICER SAFETY PLAN 10 PLUS	100681	AXON SIGNAL - SIDEARM SENSOR ONLY	238	1	01/15/2025
BUNDLE - OFFICER SAFETY PLAN 10 PLUS	100748	AXON VR - CONTROLLER - TASER 10	10	1	01/15/2025
BUNDLE - OFFICER SAFETY PLAN 10 PLUS	100832	AXON VR - CONTROLLER - HANDGUN VR19H	10	1	01/15/2025
BUNDLE - OFFICER SAFETY PLAN 10 PLUS	101124	AXON VR - HOLSTER - T10 BLACKHAWK GREY - RH	7	1	01/15/2025
BUNDLE - OFFICER SAFETY PLAN 10 PLUS	101125	AXON VR - HOLSTER - T10 BLACKHAWK GREY - LH	3	1	01/15/2025
BUNDLE - OFFICER SAFETY PLAN 10 PLUS	101294	AXON VR - TABLET	10	1	01/15/2025
BUNDLE - OFFICER SAFETY PLAN 10 PLUS	101300	AXON VR - TABLET CASE	10	1	01/15/2025
BUNDLE - OFFICER SAFETY PLAN 10 PLUS	20018	AXON TASER - BATTERY PACK - TACTICAL	238	1	01/15/2025
BUNDLE - OFFICER SAFETY PLAN 10 PLUS	20018	AXON TASER - BATTERY PACK - TACTICAL	7	1	01/15/2025
BUNDLE - OFFICER SAFETY PLAN 10 PLUS	20018	AXON TASER - BATTERY PACK - TACTICAL	41	1	01/15/2025
BUNDLE - OFFICER SAFETY PLAN 10 PLUS	20378	AXON VR - HEADSET - HTC FOCUS 3	10	1	01/15/2025
BUNDLE - OFFICER SAFETY PLAN 10 PLUS	70033	AXON - DOCK WALL MOUNT - BRACKET ASSY	3	1	01/15/2025
BUNDLE - OFFICER SAFETY PLAN 10 PLUS	71019	AXON BODY - DOCK POWERCORD - NORTH AMERICA	3	1	01/15/2025
BUNDLE - OFFICER SAFETY PLAN 10 PLUS	71044	AXON SIGNAL - BATTERY - CR2430 SINGLE PACK	476	1	01/15/2025
BUNDLE - OFFICER SAFETY PLAN 10 PLUS	74200	AXON TASER - DOCK - SIX BAY PLUS CORE	3	1	01/15/2025
BUNDLE - OFFICER SAFETY PLAN 10 PLUS	80087	AXON TASER - TARGET - CONDUCTIVE PROFESSIONAL RUGGEDIZED	4	1	01/15/2025
BUNDLE - OFFICER SAFETY PLAN 10 PLUS	80090	AXON TASER - TARGET FRAME - PROFESSIONAL 27.5 IN X 75 IN	4	1	01/15/2025
BUNDLE - UNLIMITED PLUS	100126	AXON VR - TACTICAL BAG	2	1	01/15/2025
BUNDLE - UNLIMITED PLUS	100681	AXON SIGNAL - SIDEARM SENSOR ONLY	33	1	01/15/2025
BUNDLE - UNLIMITED PLUS	100748	AXON VR - CONTROLLER - TASER 10	2	1	01/15/2025
BUNDLE - UNLIMITED PLUS	100832	AXON VR - CONTROLLER - HANDGUN VR19H	2	1	01/15/2025
BUNDLE - UNLIMITED PLUS	101124	AXON VR - HOLSTER - T10 BLACKHAWK GREY - RH	2	1	01/15/2025
BUNDLE - UNLIMITED PLUS	101294	AXON VR - TABLET	2	1	01/15/2025
BUNDLE - UNLIMITED PLUS	101300	AXON VR - TABLET CASE	2	1	01/15/2025
BUNDLE - UNLIMITED PLUS	20378	AXON VR - HEADSET - HTC FOCUS 3	2	1	01/15/2025
BUNDLE - UNLIMITED PLUS	71044	AXON SIGNAL - BATTERY - CR2430 SINGLE PACK	66	1	01/15/2025
BUNDLE - OFFICER SAFETY PLAN 10 PLUS	100399	AXON TASER 10 - CARTRIDGE - LIVE	720	1	01/15/2026
BUNDLE - OFFICER SAFETY PLAN 10 PLUS	100400	AXON TASER 10 - CARTRIDGE - HALT	1910	1	01/15/2026
BUNDLE - OFFICER SAFETY PLAN 10 PLUS	100399	AXON TASER 10 - CARTRIDGE - LIVE	710	1	01/15/2027
BUNDLE - OFFICER SAFETY PLAN 10 PLUS	100400	AXON TASER 10 - CARTRIDGE - HALT	1900	1	01/15/2027
BUNDLE - OFFICER SAFETY PLAN 10 PLUS	100210	AXON VR - TAP REFRESH 1 - TABLET	10	1	07/15/2027
BUNDLE - OFFICER SAFETY PLAN 10 PLUS	101009	AXON VR - TAP REFRESH 1 - SIDEARM CONTROLLER	10	1	07/15/2027
BUNDLE - OFFICER SAFETY PLAN 10 PLUS	101012	AXON VR - TAP REFRESH 1 - CONTROLLER	10	1	07/15/2027
BUNDLE - OFFICER SAFETY PLAN 10 PLUS	20373	AXON VR - TAP REFRESH 1 - HEADSET	10	1	07/15/2027
BUNDLE - OFFICER SAFETY PLAN 10 PLUS	73309	AXON BODY - TAP REFRESH 1 - CAMERA	245	1	07/15/2027
BUNDLE - OFFICER SAFETY PLAN 10 PLUS	73689	AXON BODY - TAP REFRESH 1 - DOCK MULTI BAY	30	1	07/15/2027
BUNDLE - UNLIMITED PLUS	100210	AXON VR - TAP REFRESH 1 - TABLET	2	1	07/15/2027
BUNDLE - UNLIMITED PLUS	101009	AXON VR - TAP REFRESH 1 - SIDEARM CONTROLLER	2	1	07/15/2027
BUNDLE - UNLIMITED PLUS	101012	AXON VR - TAP REFRESH 1 - CONTROLLER	2	1	07/15/2027
BUNDLE - UNLIMITED PLUS	20373	AXON VR - TAP REFRESH 1 - HEADSET	2	1	07/15/2027
BUNDLE - UNLIMITED PLUS	73309	AXON BODY - TAP REFRESH 1 - CAMERA	34	1	07/15/2027
BUNDLE - UNLIMITED PLUS	73689	AXON BODY - TAP REFRESH 1 - DOCK MULTI BAY	5	1	07/15/2027
BUNDLE - OFFICER SAFETY PLAN 10 PLUS	100399	AXON TASER 10 - CARTRIDGE - LIVE	720	1	01/15/2028

Hardware

Bundle	Item	Description	QTY	Shipping Location	Estimated Delivery Date
BUNDLE - OFFICER SAFETY PLAN 10 PLUS	100400	AXON TASER 10 - CARTRIDGE - HALT	1910	1	01/15/2028
BUNDLE - OFFICER SAFETY PLAN 10 PLUS	100399	AXON TASER 10 - CARTRIDGE - LIVE	710	1	01/15/2029
BUNDLE - OFFICER SAFETY PLAN 10 PLUS	100400	AXON TASER 10 - CARTRIDGE - HALT	1900	1	01/15/2029
BUNDLE - OFFICER SAFETY PLAN 10 PLUS	73310	AXON BODY - TAP REFRESH 2 - CAMERA	245	1	01/15/2030
BUNDLE - OFFICER SAFETY PLAN 10 PLUS	73688	AXON BODY - TAP REFRESH 2 - DOCK MULTI BAY	30	1	01/15/2030
BUNDLE - UNLIMITED PLUS	73310	AXON BODY - TAP REFRESH 2 - CAMERA	34	1	01/15/2030
BUNDLE - UNLIMITED PLUS	73688	AXON BODY - TAP REFRESH 2 - DOCK MULTI BAY	5	1	01/15/2030

Software

Bundle	Item	Description	QTY	Estimated Start Date	Estimated End Date
Basic License Bundle	73683	AXON EVIDENCE - STORAGE - 10GB A LA CARTE	34	02/15/2025	02/14/2030
Basic License Bundle	73840	AXON EVIDENCE - ECOM LICENSE - BASIC	34	02/15/2025	02/14/2030
BUNDLE - OFFICER SAFETY PLAN 10 PLUS	100801	AXON RECORDS - OSP LICENSE	238	02/15/2025	02/14/2030
BUNDLE - OFFICER SAFETY PLAN 10 PLUS	101180	AXON TASER - DATA SCIENCE PROGRAM	238	02/15/2025	02/14/2030
BUNDLE - OFFICER SAFETY PLAN 10 PLUS	20248	AXON TASER - EVIDENCE.COM LICENSE	238	02/15/2025	02/14/2030
BUNDLE - OFFICER SAFETY PLAN 10 PLUS	20248	AXON TASER - EVIDENCE.COM LICENSE	2	02/15/2025	02/14/2030
BUNDLE - OFFICER SAFETY PLAN 10 PLUS	20370	AXON VR - FULL ACCESS - TASER ADD-ON USER	238	02/15/2025	02/14/2030
BUNDLE - OFFICER SAFETY PLAN 10 PLUS	73478	AXON EVIDENCE - REDACTION ASSISTANT USER LICENSE	238	02/15/2025	02/14/2030
BUNDLE - OFFICER SAFETY PLAN 10 PLUS	73618	AXON COMMUNITY REQUEST	238	02/15/2025	02/14/2030
BUNDLE - OFFICER SAFETY PLAN 10 PLUS	73638	AXON STANDARDS - LICENSE	238	02/15/2025	02/14/2030
BUNDLE - OFFICER SAFETY PLAN 10 PLUS	73680	AXON RESPOND PLUS - LICENSE	238	02/15/2025	02/14/2030
BUNDLE - OFFICER SAFETY PLAN 10 PLUS	73682	AXON EVIDENCE - AUTO TAGGING LICENSE	238	02/15/2025	02/14/2030
BUNDLE - OFFICER SAFETY PLAN 10 PLUS	73683	AXON EVIDENCE - STORAGE - 10GB A LA CARTE	2380	02/15/2025	02/14/2030
BUNDLE - OFFICER SAFETY PLAN 10 PLUS	73686	AXON EVIDENCE - STORAGE - UNLIMITED (AXON DEVICE)	238	02/15/2025	02/14/2030
BUNDLE - OFFICER SAFETY PLAN 10 PLUS	73739	AXON PERFORMANCE - LICENSE	238	02/15/2025	02/14/2030
BUNDLE - OFFICER SAFETY PLAN 10 PLUS	73746	AXON EVIDENCE - ECOM LICENSE - PRO	238	02/15/2025	02/14/2030
BUNDLE - OFFICER SAFETY PLAN 10 PLUS	73746	AXON EVIDENCE - ECOM LICENSE - PRO	2	02/15/2025	02/14/2030
BUNDLE - UNLIMITED PLUS	100801	AXON RECORDS - OSP LICENSE	33	02/15/2025	02/14/2030
BUNDLE - UNLIMITED PLUS	20370	AXON VR - FULL ACCESS - TASER ADD-ON USER	33	02/15/2025	02/14/2030
BUNDLE - UNLIMITED PLUS	73478	AXON EVIDENCE - REDACTION ASSISTANT USER LICENSE	33	02/15/2025	02/14/2030
BUNDLE - UNLIMITED PLUS	73618	AXON COMMUNITY REQUEST	33	02/15/2025	02/14/2030
BUNDLE - UNLIMITED PLUS	73638	AXON STANDARDS - LICENSE	33	02/15/2025	02/14/2030
BUNDLE - UNLIMITED PLUS	73680	AXON RESPOND PLUS - LICENSE	33	02/15/2025	02/14/2030
BUNDLE - UNLIMITED PLUS	73682	AXON EVIDENCE - AUTO TAGGING LICENSE	33	02/15/2025	02/14/2030
BUNDLE - UNLIMITED PLUS	73683	AXON EVIDENCE - STORAGE - 10GB A LA CARTE	330	02/15/2025	02/14/2030
BUNDLE - UNLIMITED PLUS	73686	AXON EVIDENCE - STORAGE - UNLIMITED (AXON DEVICE)	33	02/15/2025	02/14/2030
BUNDLE - UNLIMITED PLUS	73739	AXON PERFORMANCE - LICENSE	33	02/15/2025	02/14/2030
BUNDLE - UNLIMITED PLUS	73746	AXON EVIDENCE - ECOM LICENSE - PRO	33	02/15/2025	02/14/2030
Pro License Bundle	73683	AXON EVIDENCE - STORAGE - 10GB A LA CARTE	105	02/15/2025	02/14/2030
Pro License Bundle	73746	AXON EVIDENCE - ECOM LICENSE - PRO	35	02/15/2025	02/14/2030
A la Carte	85759	AXON AUTO-TRANSCRIBE - MINUTES - A-LA-CARTE 1000	10	02/15/2025	02/14/2030

Services

Bundle	Item	Description	QTY
BUNDLE - OFFICER SAFETY PLAN 10 PLUS	100751	AXON TASER 10 - REPLACEMENT ACCESS PROGRAM - DUTY CARTRIDGE	238
BUNDLE - OFFICER SAFETY PLAN 10 PLUS	101184	AXON INVESTIGATE - TRAINING - OPERATOR AND EXAMINER	16
BUNDLE - OFFICER SAFETY PLAN 10 PLUS	101193	AXON TASER - ON DEMAND CERTIFICATION	1
BUNDLE - OFFICER SAFETY PLAN 10 PLUS	11642	AXON INVESTIGATE - THIRD PARTY VIDEO SUPPORT	238
BUNDLE - UNLIMITED PLUS	101184	AXON INVESTIGATE - TRAINING - OPERATOR AND EXAMINER	3
BUNDLE - UNLIMITED PLUS	11642	AXON INVESTIGATE - THIRD PARTY VIDEO SUPPORT	33

Services

Bundle	Item	Description	QTY
A la Carte	101267	AXON VR - PSO - FULL INSTALLATION	1
A la Carte	75014	AXON SIGNAL - PSO - INSTALLATION SERVICE ONSITE	1
A la Carte	85144	AXON BODY - PSO - STARTER	1
A la Carte	85149	AXON TASER - 2 DAY PRODUCT SPECIFIC INSTRUCTOR COURSE	1
A la Carte	99901	AXON ACCELERATE CONFERENCE REGISTRATION	3

Warranties

Bundle	Item	Description	QTY	Estimated Start Date	Estimated End Date
BUNDLE - OFFICER SAFETY PLAN 10 PLUS	100197	AXON VR - EXT WARRANTY - HTC FOCUS 3 HEADSET	10	01/15/2026	02/14/2030
BUNDLE - OFFICER SAFETY PLAN 10 PLUS	100213	AXON VR - EXT WARRANTY - TABLET	10	01/15/2026	02/14/2030
BUNDLE - OFFICER SAFETY PLAN 10 PLUS	100704	AXON TASER 10 - EXT WARRANTY - HANDLE	7	01/15/2026	02/14/2030
BUNDLE - OFFICER SAFETY PLAN 10 PLUS	100704	AXON TASER 10 - EXT WARRANTY - HANDLE	238	01/15/2026	02/14/2030
BUNDLE - OFFICER SAFETY PLAN 10 PLUS	101007	AXON VR - EXT WARRANTY - CONTROLLER	10	01/15/2026	02/14/2030
BUNDLE - OFFICER SAFETY PLAN 10 PLUS	101008	AXON VR - EXT WARRANTY - HANDGUN CONTROLLER	10	01/15/2026	02/14/2030
BUNDLE - OFFICER SAFETY PLAN 10 PLUS	80374	AXON TASER - EXT WARRANTY - BATTERY PACK T7/T10	238	01/15/2026	02/14/2030
BUNDLE - OFFICER SAFETY PLAN 10 PLUS	80374	AXON TASER - EXT WARRANTY - BATTERY PACK T7/T10	41	01/15/2026	02/14/2030
BUNDLE - OFFICER SAFETY PLAN 10 PLUS	80374	AXON TASER - EXT WARRANTY - BATTERY PACK T7/T10	7	01/15/2026	02/14/2030
BUNDLE - OFFICER SAFETY PLAN 10 PLUS	80396	AXON TASER - EXT WARRANTY - DOCK SIX BAY T7/T10	3	01/15/2026	02/14/2030
BUNDLE - OFFICER SAFETY PLAN 10 PLUS	80464	AXON BODY - TAP WARRANTY - CAMERA	238	01/15/2026	02/14/2030
BUNDLE - OFFICER SAFETY PLAN 10 PLUS	80464	AXON BODY - TAP WARRANTY - CAMERA	7	01/15/2026	02/14/2030
BUNDLE - OFFICER SAFETY PLAN 10 PLUS	80465	AXON BODY - TAP WARRANTY - MULTI BAY DOCK	30	01/15/2026	02/14/2030
BUNDLE - UNLIMITED PLUS	100197	AXON VR - EXT WARRANTY - HTC FOCUS 3 HEADSET	2	01/15/2026	02/14/2030
BUNDLE - UNLIMITED PLUS	100213	AXON VR - EXT WARRANTY - TABLET	2	01/15/2026	02/14/2030
BUNDLE - UNLIMITED PLUS	101007	AXON VR - EXT WARRANTY - CONTROLLER	2	01/15/2026	02/14/2030
BUNDLE - UNLIMITED PLUS	101008	AXON VR - EXT WARRANTY - HANDGUN CONTROLLER	2	01/15/2026	02/14/2030
BUNDLE - UNLIMITED PLUS	80464	AXON BODY - TAP WARRANTY - CAMERA	33	01/15/2026	02/14/2030
BUNDLE - UNLIMITED PLUS	80464	AXON BODY - TAP WARRANTY - CAMERA	1	01/15/2026	02/14/2030
BUNDLE - UNLIMITED PLUS	80465	AXON BODY - TAP WARRANTY - MULTI BAY DOCK	5	01/15/2026	02/14/2030

Shipping Locations

Location Number	Street	City	State	Zip	Country
1	200 S Main St	Pueblo	CO	81003-3525	USA
2	200 S Main St	Pueblo	CO	81003-3525	USA

Payment Details

Jan 2025

Invoice Plan	Item	Description	Qty	Subtotal	Tax	Total
Upfront	101267	AXON VR - PSO - FULL INSTALLATION	1	$0.00	$0.00	$0.00
Upfront	75014	AXON SIGNAL - PSO - INSTALLATION SERVICE ONSITE	1	$0.00	$0.00	$0.00
Upfront	85144	AXON BODY - PSO - STARTER	1	$0.00	$0.00	$0.00
Upfront	85149	AXON TASER - 2 DAY PRODUCT SPECIFIC INSTRUCTOR COURSE	1	$0.00	$0.00	$0.00
Upfront	85759	AXON AUTO-TRANSCRIBE - MINUTES - A-LA-CARTE 1000	10	$0.00	$0.00	$0.00
Year 1	99901	AXON ACCELERATE CONFERENCE REGISTRATION	3	$0.00	$0.00	$0.00
Year 1	B00022	BUNDLE - UNLIMITED PLUS	33	$75,845.87	$0.00	$75,845.87
Year 1	BasicLicense	Basic License Bundle	34	$6,630.00	$0.00	$6,630.00
Year 1	H00001	AB4 Camera Bundle	271	$0.00	$0.00	$0.00
Year 1	H00002	AB4 Multi Bay Dock Bundle	35	$0.00	$0.00	$0.00
Year 1	M00012	BUNDLE - OFFICER SAFETY PLAN 10 PLUS	238	$724,681.45	$0.00	$724,681.45
Year 1	ProLicense	Pro License Bundle	35	$18,198.60	$0.00	$18,198.60
Total				**$825,355.92**	**$0.00**	**$825,355.92**

Feb 2025

Invoice Plan	Item	Description	Qty	Subtotal	Tax	Total
Invoice Upon Fulfillment	M00012	BUNDLE - OFFICER SAFETY PLAN 10 PLUS	238	$0.00	$0.00	$0.00
Total				**$0.00**	**$0.00**	**$0.00**

Jan 2026

Invoice Plan	Item	Description	Qty	Subtotal	Tax	Total
Year 2	99901	AXON ACCELERATE CONFERENCE REGISTRATION	3	$0.00	$0.00	$0.00
Year 2	B00022	BUNDLE - UNLIMITED PLUS	33	$75,845.87	$0.00	$75,845.87
Year 2	BasicLicense	Basic License Bundle	34	$6,630.00	$0.00	$6,630.00
Year 2	H00001	AB4 Camera Bundle	271	$0.00	$0.00	$0.00
Year 2	H00002	AB4 Multi Bay Dock Bundle	35	$0.00	$0.00	$0.00
Year 2	M00012	BUNDLE - OFFICER SAFETY PLAN 10 PLUS	238	$724,681.45	$0.00	$724,681.45
Year 2	ProLicense	Pro License Bundle	35	$18,198.60	$0.00	$18,198.60
Total				**$825,355.92**	**$0.00**	**$825,355.92**

Jan 2027

Invoice Plan	Item	Description	Qty	Subtotal	Tax	Total
Year 3	99901	AXON ACCELERATE CONFERENCE REGISTRATION	3	$0.00	$0.00	$0.00
Year 3	B00022	BUNDLE - UNLIMITED PLUS	33	$75,845.87	$0.00	$75,845.87
Year 3	BasicLicense	Basic License Bundle	34	$6,630.00	$0.00	$6,630.00
Year 3	H00001	AB4 Camera Bundle	271	$0.00	$0.00	$0.00

Jan 2027

Invoice Plan	Item	Description	Qty	Subtotal	Tax	Total
Year 3	H00002	AB4 Multi Bay Dock Bundle	35	$0.00	$0.00	$0.00
Year 3	M00012	BUNDLE - OFFICER SAFETY PLAN 10 PLUS	238	$724,681.45	$0.00	$724,681.45
Year 3	ProLicense	Pro License Bundle	35	$18,198.60	$0.00	$18,198.60
Total				**$825,355.92**	**$0.00**	**$825,355.92**

Jan 2028

Invoice Plan	Item	Description	Qty	Subtotal	Tax	Total
Year 4	99901	AXON ACCELERATE CONFERENCE REGISTRATION	3	$0.00	$0.00	$0.00
Year 4	B00022	BUNDLE - UNLIMITED PLUS	33	$75,845.87	$0.00	$75,845.87
Year 4	BasicLicense	Basic License Bundle	34	$6,630.00	$0.00	$6,630.00
Year 4	H00001	AB4 Camera Bundle	271	$0.00	$0.00	$0.00
Year 4	H00002	AB4 Multi Bay Dock Bundle	35	$0.00	$0.00	$0.00
Year 4	M00012	BUNDLE - OFFICER SAFETY PLAN 10 PLUS	238	$724,681.45	$0.00	$724,681.45
Year 4	ProLicense	Pro License Bundle	35	$18,198.60	$0.00	$18,198.60
Total				**$825,355.92**	**$0.00**	**$825,355.92**

Jan 2029

Invoice Plan	Item	Description	Qty	Subtotal	Tax	Total
Year 5	99901	AXON ACCELERATE CONFERENCE REGISTRATION	3	$0.00	$0.00	$0.00
Year 5	B00022	BUNDLE - UNLIMITED PLUS	33	$75,845.87	$0.00	$75,845.87
Year 5	BasicLicense	Basic License Bundle	34	$6,630.00	$0.00	$6,630.00
Year 5	H00001	AB4 Camera Bundle	271	$0.00	$0.00	$0.00
Year 5	H00002	AB4 Multi Bay Dock Bundle	35	$0.00	$0.00	$0.00
Year 5	M00012	BUNDLE - OFFICER SAFETY PLAN 10 PLUS	238	$724,681.45	$0.00	$724,681.45
Year 5	ProLicense	Pro License Bundle	35	$18,198.60	$0.00	$18,198.60
Total				**$825,355.92**	**$0.00**	**$825,355.92**

Tax is estimated based on rates applicable at date of quote and subject to change at time of invoicing. If a tax exemption certificate should be applied, please submit prior to invoicing.

Standard Terms and Conditions

Axon Enterprise Inc. Sales Terms and Conditions

Axon Master Services and Purchasing Agreement:

This Quote is limited to and conditional upon your acceptance of the provisions set forth herein and Axon's Master Services and Purchasing Agreement (posted at https://www.axon.com/sales-terms-and-conditions), as well as the attached Statement of Work (SOW) for Axon Fleet and/or Axon Interview Room purchase, if applicable. In the event you and Axon have entered into a prior agreement to govern all future purchases, that agreement shall govern to the extent it includes the products and services being purchased and does not conflict with the Axon Customer Experience Improvement Program Appendix as described below.

ACEIP:

The Axon Customer Experience Improvement Program Appendix, which includes the sharing of de-identified segments of Agency Content with Axon to develop new products and improve your product experience (posted at www.axon.com/legal/sales-terms-and-conditions), is incorporated herein by reference. By signing below, you agree to the terms of the Axon Customer Experience Improvement Program.

Acceptance of Terms:

Any purchase order issued in response to this Quote is subject solely to the above referenced terms and conditions. By signing below, you represent that you are lawfully able to enter into contracts. If you are signing on behalf of an entity (including but not limited to the company, municipality, or government agency for whom you work), you represent to Axon that you have legal authority to bind that entity. If you do not have this authority, please do not sign this Quote.

Exceptions to Standard Terms and Conditions

This quote is a renewal of contract #00025387 (originated via Q-231346).

$0 BWC HW contained in this quote is considered a TAP refresh of contract #00025387. All TAP obligations of contract #00025387 will be considered fulfilled upon execution of this quote.

Signature

Date Signed

10/23/2024

Background Paper for Proposed Ordinance

COUNCIL MEETING DATE: November 11, 2024

TO: President Mark Aliff and Members of City Council

CC: Mayor Heather Graham

VIA: Marisa Stoller, City Clerk

FROM: Steven Meier, Director of Parks and Recreation

SUBJECT: AN ORDINANCE APPROVING AND AUTHORIZING THE MAYOR TO SIGN A MEMORANDUM OF UNDERSTANDING BY AND BETWEEN THE CITY OF PUEBLO, A COLORADO MUNICIPAL CORPORATION, PUEBLO URBAN RENEWAL AUTHORITY, A BODY CORPORATE AND POLITIC OF THE STATE OF COLORADO, PUEBLO SCHOOL DISTRICT 60, AND PUEBLO CENTRAL HIGH SCHOOL FOUNDATION, A COLORADO NONPROFIT CORPORATION, FOR THE CONSTRUCTION OF A SOCCER PRACTICE FIELD AS AUTHORIZED BY SECTION 603 OF THE AMERICAN RESCUE PLAN ACT AND U.S. TREASURY FINAL RULE 31 CFR 35.6, AND AUTHORIZING THE PAYMENT OF TWO HUNDRED AND FIFTY THOUSAND DOLLARS ($250,000) FROM PROJECT NO. CI2113 - AMERICAN RESCUE PLAN ACT, FOR PURPOSES THEREOF

SUMMARY:

This Ordinance approves and authorizes the Mayor to sign a Memorandum of Understanding by and between the City of Pueblo (“City”), Pueblo Urban Renewal Authority (“PURA”), Pueblo School District 60 (“District 60”), and Pueblo Central High School Foundation (“Foundation”) for the construction of a soccer practice field, as authorized by Section 603 of the American Rescue Plan Act and U.S. Treasury Final Rule 31 CFR 35.6. Funds for the project, in the amount of $250,000 will be paid out of Project No. CI2113, the American Rescue Plan Act.

PREVIOUS COUNCIL ACTION:

By Ordinance No. 9931, approved on May 17, 2021, the City Council established Project No. CI2113 and budgeted and appropriated up to $36.7 million in funds which were expected to be distributed to the City from the American Recovery Plan Act (“ARPA”) for covered costs and eligible expenses to be encumbered by December 31, 2024, and fully expended by December 31, 2026.

BACKGROUND:

District 60 owns real property adjacent to Central High School generally located at the corner of East Grant Avenue and Madison Avenue, Pueblo, Colorado. There is a need in the community for additional athletic practice fields and this location is well suited for this purpose. The total cost to develop and construct the soccer practice field is estimated at $897,500. The City and PURA have each agreed to contribute $250,000. The Foundation has agreed to contribute $47,500 and District 60 will pay the balance not to exceed $350,000. District 60 will be the fiscal agent and responsible for construction of the field.

Once constructed, the soccer field will be used primarily by District 60 but will be available for community use upon reservation. District 60 will be responsible for scheduling community practices on the field. In addition, once constructed, District 60 will be responsible for all maintenance, upkeep and repair of the practice field.

FINANCIAL IMPLICATIONS:

District 60 will receive $250,000 in ARPA funds from Project No.CI2113 as the City's contribution to the project.

BOARD/COMMISSION RECOMMENDATION:

Not applicable to this Ordinance.

STAKEHOLDER PROCESS:

Not applicable to this Ordinance.

ALTERNATIVES:

City Council could decide not to contribute to the development and construction of a new soccer practice field.

RECOMMENDATION:

Approval of the Ordinance

ATTACHMENTS:

1. MOU D60 PURA COP CHSF - Central Soccer Field

ORDINANCE NO.

AN ORDINANCE APPROVING AND AUTHORIZING THE MAYOR TO SIGN A MEMORANDUM OF UNDERSTANDING BY AND BETWEEN THE CITY OF PUEBLO, A COLORADO MUNICIPAL CORPORATION, PUEBLO URBAN RENEWAL AUTHORITY, A BODY CORPORATE AND POLITIC OF THE STATE OF COLORADO, PUEBLO SCHOOL DISTRICT 60, AND PUEBLO CENTRAL HIGH SCHOOL FOUNDATION, A COLORADO NONPROFIT CORPORATION, FOR THE CONSTRUCTION OF A SOCCER PRACTICE FIELD AS AUTHORIZED BY SECTION 603 OF THE AMERICAN RESCUE PLAN ACT AND U.S. TREASURY FINAL RULE 31 CFR 35.6, AND AUTHORIZING THE PAYMENT OF TWO HUNDRED AND FIFTY THOUSAND DOLLARS ($250,000) FROM PROJECT NO. CI2113 - AMERICAN RESCUE PLAN ACT, FOR PURPOSES THEREOF

WHEREAS, on March 11, 2021, President Biden signed the U.S. Senate-amended H.R. 1319 (P.L. 117-2) known as the American Rescue Plan Act (hereinafter "ARPA"); and

WHEREAS, on May 10, 2021, the U.S. Treasury issued the Interim Final Rule to implement ARPA in Title 31, Part 35 of the Code of Federal Regulations ("CFR"); and; NOW, THEREFORE,

BE IT ORDAINED BY THE CITY COUNCIL OF PUEBLO, that:

SECTION 1.

The Memorandum of Understanding ("MOU") by and between and the City of Pueblo, a Colorado Municipal Corporation, Pueblo Urban Renewal Authority, a body corporate and politic of the State of Colorado, Pueblo School District 60, and Pueblo Central High School Foundation, a Colorado nonprofit corporation, a copy of which is attached hereto, having been approved as to form by the City Attorney, is hereby approved.

SECTION 2.

The Mayor is hereby authorized to execute said Agreements for and on behalf of the City and the City Clerk is authorized to affix the seal of the City thereto and attest same.

SECTION 3.

Funds in the amount of $250,000 are hereby authorized to be paid from Project No. CI2113 – American Rescue Plan Act, subject to and conditioned upon the terms of the MOU.

SECTION 4.

The officers and staff of the City are authorized to perform any and all acts consistent with this Ordinance and the attached Agreement to implement the policies and procedures described herein.

SECTION 5.

This Ordinance shall become effective on the date of final action by the Mayor and City Council.

Action by City Council:

Introduced and initial adoption of Ordinance by City Council on _____.

Final adoption of Ordinance by City Council on _____.

_____
President of City Council

Action by the Mayor:

☐ Approved on _____.

☐ Disapproved on _____ based on the following objections:

_____
_____
_____
_____

_____
Mayor

Action by City Council After Disapproval by the Mayor:

☐ Council did not act to override the Mayor's veto.

☐ Ordinance re-adopted on a vote of _____, on _____

☐ Council action on _____ failed to override the Mayor's veto.

_____
President of City Council

ATTEST

_____
City Clerk

MEMORANDUM OF UNDERSTANDING

THIS MEMORANDUM OF UNDERSTANDING (MOU) is made effective as of November _, 2024 between Pueblo School District No. 60 (District 60), Pueblo Urban Renewal Authority (Authority), the City of Pueblo, a municipal corporation (City), and the Pueblo Central High School Foundation, a Colorado nonprofit corporation (Central Foundation). These entities are also referred to herein separately as Party or collectively as Parties.

Recitals

A. District 60 owns real property adjacent to Central High School and generally located at the corner of East Grant Avenue and Madison Street in Pueblo, Colorado which the Parties desire to develop into a soccer practice field (Soccer Project).

B. The Parties wish to cooperate in the development and completion of the Soccer Project through their mutual contribution of the necessary funds as provided herein.

C. The Parties have determined that the Soccer Project will positively impact the community.

NOW, THEREFORE, in consideration of the foregoing Recitals, incorporated by this reference, and their mutual promises, the Parties have reached the following understanding:

1. COLLABORATION

The primary objective of this MOU is to formalize the commitment of the Parties to collaborate in the financing, development, and construction of the Soccer Project.

2. RELATIONSHIP

2.1 The relationship between the Parties shall be solely that of independent entities, and nothing in this MOU shall be deemed to constitute, create, or give effect to, or otherwise be recognized as the creation of a business entity or joint venture of any kind and the rights and obligations of the Parties shall be limited to those expressly set forth herein.

2.2 Nothing herein contained shall be construed as authorizing either Party to act as an agent or representative of the other or to make any commitment or create any obligations for the other without such Party's prior written consent.

2.3 Each Party shall be solely responsible for its own costs and expenses incurred in connection with or contemplated by this MOU. If the Parties agree to use consultants, architects, engineers or other third-parties to provide advice or services toward the Soccer Project, those costs and expenses shall be apportioned based upon the Parties respective level of funding contribution or as otherwise agreed between the Parties; provided, however, neither Party is authorized to retain any consultants or third-party advisers for which any or all of the other Parties would be responsible unless authorized by official action of the other Party.

3. MONETARY AND IN-KIND CONTRIBUTIONS

3.1 Subject to any necessary appropriation by the respective Party's governing board, the Parties agree to pledge the following amounts to the Soccer Project: (i) Authority: $250,000; (ii) City: $250,000; (iii) Central Foundation: $47,500; (iv) District 60: the balance of money necessary to complete the Soccer Project not to exceed $350,000. In addition to its monetary contribution, District 60 will undertake the awarding and management of all contracts with design professionals and contractors who are engaged to provide services or supplies toward the completion of the Soccer Project, using its standard design and construction bidding and public contracting procedures.

3.2 On or before February 1, 2025, the Parties will confirm in writing to District 60 that they have appropriated their respective monetary contribution required in Section 3.1 herein.

3.3 The Parties understand and accept that the provisions of C.R.S. § 24-91-103.6 require in pertinent part that District 60 have money appropriated that is equal to or in excess of the contract amount for any designer or contractor who is engaged to perform services or provide materials for the Soccer Project. Therefore, the Parties agree to deposit their respective monetary contribution with District 60 within ninety (90) days following any necessary approval by their governing boards. District 60 will not award and finalize any contracts for work on the Soccer Project until all of the monetary contributions have been deposited and District 60 has determined that the Soccer Project may be completed within the total of the monetary contributions from the Parties. Should District 60 determine the Soccer Project cannot be completed within the total of the monetary contributions from the Parties or the Soccer Project not proceed for any reason, after the Parties deposit their respective monetary contributions with District 60, District 60 shall return the contributions to the respective Party within ninety (90) days.

3.4 Within thirty (30) days after written request from any Party, District 60 will provide an accounting of the monetary contributions that have been deposited and expenditures that have been made toward the Soccer Project.

4. TERM

The term of this MOU will commence as of the effective date stated above and continue for a period of two (2) years thereafter or until District 60 certifies the completion of the Soccer Project whichever occurs last.

5. GENERAL

5.1 This MOU constitutes the entire understanding between the Parties relating to its subject matter. Notwithstanding any language in this Agreement or any other agreement, representation, or warranty to the contrary, the Parties shall not be deemed to be partners or joint venturers, and no Party shall be responsible for any debt or liability of any other Party.

5.2 To the fullest extent permitted under applicable law, under no circumstances shall either Party be liable for any indirect, special, incidental, consequential, multiple or punitive damages, lost profits, or opportunity costs suffered directly or indirectly in connection with this MOU and/or resulting from any termination of this MOU, or for any liability to third parties incurred by the other Party, whether such claim is based upon breach of contract or any other theory of liability, including strict liability. The Parties, their officers and employees are relying on and do not waive or intend to waive by any provision of this Agreement, the monetary limitations or any other rights, immunities, and protections provided by the Colorado Governmental Immunity Act, Sections 24-10-101, et seq., as amended, or otherwise available to the Parties, their officers and employees.

5.3 No variations or alterations to this MOU shall be effective unless made in writing and duly signed by the authorized signatories of each Party.

5.4 This MOU may be signed in any number of separate counterparts, including by way of facsimile or other electronic transmission, each of which shall be an original with the same effect as if the signatures thereto were upon the same instrument and all of which when taken together shall constitute one and the same instrument. Notwithstanding the foregoing, the requirements of this Section shall not apply to standard, day-to-day communications required for the orderly performance and administration of this MOU, which may be accomplished by the method mutually agreed upon by the Parties' representatives.

5.5 All notices provided by any Party to another Party will be in writing and will be deemed to have been duly given when delivered personally or when deposited in the United States Mail, First Class, postage prepaid, addressed as follows:

District 60: Barbara Kimzey, Ed.D., Superintendent, Pueblo School District No. 60, 315 W. 11th Street, Pueblo, CO 81003.

Authority: Jerry M. Pacheco, Executive Director, Pueblo Urban Renewal Authority, 115 E. Riverwalk, Suite 410, Pueblo, CO 81003.

City: Heather Graham, Mayo, City of Pueblo, 1 City Hall Place, Pueblo, CO 81003.

Central Foundation: Lori Miller, President, Pueblo Central High School Foundation, c/o Central High School, 216 E. Orman Avenue, Pueblo, CO 81004.

IN WITNESS WHEREOF, the Parties have executed this MOU as of the dates indicated below.

PUEBLO SCHOOL DISTRICT NO. 60

By: _____
Name: Susan Pannunzio
Title: President, Board of Education

Date:_____

Approved as to form:

By: _____
Caplan and Earnest LLC
Attorneys for Pueblo School District No. 60

PUEBLO URBAN RENEWAL AUTHORITY

By: _____
Name:_____
Title:_____

Date:_____

CITY OF PUEBLO

By: _____
Name: Heather Graham
Title: Mayor

Date: _____

PUEBLO CENTRAL HIGH SCHOOL FOUNDATION

By: _____
Nam: Lori Miller
Title: President

Date: _____

4856-7742-8208, v. 2

Background Paper for Proposed Ordinance

COUNCIL MEETING DATE: November 11, 2024

TO: President Mark Aliff and Members of City Council

CC: Mayor Heather Graham

VIA: Marisa Stoller, City Clerk

FROM: Elizabeth Drake, Assistant City Attorney

SUBJECT: AN ORDINANCE REPEALING SECTION 3, 4, 5 AND 6 OF CHAPTER 2 OF TITLE IX AND CERTAIN SECTIONS OF THE PUEBLO MUNICIPAL CODE RELATING TO CABARET LICENSES

SUMMARY:

Attached for consideration is a proposed Ordinance repealing the requirement for Cabaret Licenses.

PREVIOUS COUNCIL ACTION:

PMC 9-2-3 was enacted in 1957 and modified in 1973 and 1982. 9-2-4 was enacted in 1957, and last modified in 2023 to allow for petitions, remonstrances, or otherwise as evidence at a licensing hearing rather than petitions or testimony. Sec. 9-2-5 was enacted in 1957 and only modified once in 1982. Sec. 9-2-6 was last modified in 2022 to amend the number of days for filing of review.

BACKGROUND:

Sec. 9-3-2, PMC, requires liquor licensed premises to obtain a cabaret license if they have anyone including employees, patrons or guests engage in social dancing or dance performance or exhibition with or without music. Meaning that business owners must obtain this license or admonish patrons from swaying or tapping their feet as code does not define dancing.

Of the 10 Colorado municipal codes reviewed, none require licenses in the same manner as Pueblo i.e. to allow liquor licensed premises to have dancing. (Those cities are Canon City, Arvada, Brighton, Centennial, Commerce City, Colorado Springs, Fort Collins, Lakewood, Thornton and Boulder). Additionally, one municipality, Commerce City, expressly allows bars and taverns to have dancing if it is not “adult”.

Currently liquor licensed premises that hold a cabaret license pay $200 per year to renew in addition to fees associated with the liquor license. To obtain a cabaret license,

an establishment must pay a $300 fee for new license and conduct a mailing to the businesses and residents within a 500-foot radius. As each location is unique it is hard to pinpoint that cost, however, a recent license applicant spent $860 for the mailing fees and additionally had 2 staff members at the post office processing the certified mailing cards for 2 hours (4 man hours) in addition to the time it takes to prepare the letters and envelopes. Costs can also vary if the application is done in conjunction with the application for liquor license as that also requires contacting residents and businesses in a larger but overlapping area both contacts can be done simultaneously. If, however, the application is not done at the same time as the liquor license application then renewal time for both licenses will likely be different, placing an additional burden on the business and City staff to track.

City staff spend resources including time processing these licenses and applications preparing the maps and surveys for the Liquor and Beer Licensing Authority to approve the GIS map. Once approved and mailed, it takes additional City resources to post notices of the hearing and prepare for the public hearing at the Liquor and Beer Licensing Authority. In addition, it takes resources of the Liquor and Beer Licensing Authority to conduct the hearing. Departments involved in a new license include City Clerk, Law Department (review, advising Liquor and Beer Licensing Authority, and drafting final orders of the board), and the Liquor and Beer Licensing Board, additionally reviews from Fire Department, Regional Building, Planning (Zoning), Health Department, Sales Tax, Finance, GIS. No one recollects a single public comment, let alone an objection, at the final Liquor and Beer Licensing Board meeting to approve only a cabaret license.

2024 has 35 renewal licenses and 5 new or still pending approval as of July 2023 had 41 licenses issued both renewal and new (17 were new licenses). Prior licenses were tracked in a different system so numbers are difficult to verify.

Members of the Liquor and Beer Licensing Board have been approached by local musicians stating that they are not being booked because establishments are afraid if they have live music and patrons dance, they risk having a violation on their liquor licenses.

FINANCIAL IMPLICATIONS:

License fees brought in approximately $9,900 in 2023. However, this number is not offset by cost of resources and materials used by City in issuing and monitoring licenses.

BOARD/COMMISSION RECOMMENDATION:

Liquor and Beer Licensing Board members have expressed their support for this change.

STAKEHOLDER PROCESS:

Not applicable to this Ordinance.

ALTERNATIVES:

Not approving these changes will mean businesses will still incur these expenses and City resources will be used in issuing licenses.

RECOMMENDATION:

Approval of the Ordinance.

ATTACHMENTS:

1. Ordinance - Cabaret License

ORDINANCE NO. _____

AN ORDINANCE REPEALING SECTION 3, 4, 5, AND 6 OF CHAPTER 2 OF TITLE IX AND CERTAIN SECTIONS OF THE PUEBLO MUNICIPAL CODE RELATING TO CABARET LICENSES

WHEREAS, the City of Pueblo ("City") is a Colorado home rule municipality, with all powers and authority vested under Colorado law; and

WHEREAS, City is business friendly and requiring Cabaret Licenses as structured puts undue burden on local liquor licensed establishments; and

WHEREAS, few, if any, other municipalities in Colorado still require Cabaret Licenses for any dancing in a liquor licensed establishment; and

WHEREAS, issuing, maintaining and regulation of Cabaret Licenses utilized City resources; NOW, THEREFORE,

BE IT ORDAINED BY THE CITY COUNCIL OF PUEBLO, that: (brackets indicate matter being deleted, underscoring indicates new matter being added)

SECTION 1.

Section 9-2-3 is hereby repealed.

[Sec. 9-2-3. – Cabaret license; definitions.

(a) *Beer licensed premises* shall mean any premises owned or possessed by a person licensed under the Colorado Beer Code to sell fermented malt beverages for consumption on such premises or on and off such premises, except premises operated under a special event permit.

(b) *Liquor licensed premises* shall mean any premises owned or possessed by a person licensed under the Colorado Liquor Code to sell alcoholic beverages by the drink for consumption on such premises, except premises operated under a club or arts license or special event permit.

(c) Cabaret shall mean any liquor licensed premises or beer licensed premises, as defined in subsections (a) and (b) above, on which one (1) or more employees, entertainers, patrons or guests of the licensee are allowed to engage in social dancing or in a dance performance or exhibition, either with or without musical accompaniment.

(d) *Board* shall mean the Liquor and Beer Licensing Board of the City.**]**

SECTION 2.

Section 9-2-4 is hereby repealed.

[Sec. 9-2-4. - Application; hearing; fees; rules.

(a) Applications for original issuance or transfer of ownership or location of cabaret licenses shall be filed in triplicate with the City Clerk on forms which shall contain such information as the Board may require. The Board shall schedule a public hearing on each application not less than thirty (30) days from the date of filing and shall give public notice of such hearing both by publication pursuant to Section 1-7-6 of this Code and by posting notice on the premises pursuant to the procedure set out in Section 44-3-311, C.R.S. At least ten (10) days prior to the date of hearing, on any application for original issuance or transfer of location of a cabaret license, the applicant shall serve copies of the notice of hearing on all owners, lessees and adult occupants of all private property within five hundred (500) feet of the proposed cabaret premises. Such notice shall be given in a form approved by the Board and in the manner provided by Section 1-1-11 of this Code, except that notice shall be issued and served and proof of service shall be filed by the applicant or his or her agent rather than by the City. The distance referred to above is to be computed by measurement along the shortest straight line between any neighboring property line and any exterior wall of the proposed licensed premises.

(b) The public hearing shall be conducted as a quasi-judicial hearing under procedures set out in Chapter 7 of Title I of this Code. In determining whether to grant or deny an application for original issuance or transfer of location of a cabaret license, the Board shall consider the moral character of the applicant, reasonable requirements of the neighborhood and the desires of neighborhood residents for cabaret licensed premises as evidenced by petitions, remonstrances, or otherwise, the number of cabarets located in or near the neighborhood, and the probable effect of issuance of the license on the public health, safety, and morals of the community.

(c) The annual fee for original issuance, renewal or transfer of location or ownership of a cabaret license shall be two hundred dollars ($200.00). Applications for original issuance or transfer of location or ownership of a cabaret license shall also be accompanied by a processing fee of one hundred dollars ($100.00). Cabaret licenses shall expire one (1) year from date of issuance unless sooner renewed. Applications for renewal of existing licenses shall be filed with the City Clerk not later than forty-five (45) days before the date of license expiration. The Board may hold a public hearing on any renewal application.

(d) Ownership of cabaret licenses shall not be transferable except with prior approval of the Board after public hearing. In determining whether to permit the transfer of ownership, the Board shall consider only the moral character of the transferee applicant. If such transfer is approved, the transferee shall pay the full annual fee and shall be issued a new license.

(e) The Board is hereby authorized to establish rules and regulations to implement the provisions of this Chapter.**]**

SECTION 3.

Section 9-2-5 is hereby repealed.

[Sec. 9-2-5. - Prohibited acts.

(a) No person shall operate a cabaret in the City without a valid license issued hereunder.

(b) No person shall operate a cabaret on any liquor licensed premises at any time when the sale of alcoholic beverages on the premises is prohibited by law.

(c) No person shall operate a cabaret on any beer licensed premises at any time when the sale of fermented malt beverages on the premises is prohibited by law.

(d) No cabaret license shall be valid or used for any premises other than the premises specified and defined in the application and license issued based thereon.

(e) No cabaret licensed premises shall at any time be operated as a public dance hall as defined in this Chapter, and nothing contained herein shall be construed as repealing or affecting any ordinance regarding public dance halls.

(f) No person shall operate a cabaret at any time when the liquor license or fermented malt beverage license for the cabaret premises has been suspended, revoked or denied renewal, or has expired.

(g) No cabaret license shall be issued to any person except the liquor licensee or fermented malt beverage licensee for the proposed cabaret premises.

(h) Neither the issuance of a cabaret license nor the payment of any fee required hereunder shall relieve the licensee from responsibility for payment of any other fee, charge or tax imposed by law, nor from compliance with any other applicable provision of law.**]**

SECTION 4.

Section 9-2-6 is hereby revoked.

[Sec. 9-2-6. - Revocation; suspension; appeal; penalties.

(a) In addition to any other penalty provided by law, any cabaret license may be suspended, revoked or denied renewal by the Board after a hearing, for violation by the licensee or his or her agent or employee of any provision of this Chapter or of the Colorado Beer Code, Colorado Liquor Code or Colorado Criminal Code if such violation arises out of the operation of the cabaret premises.

(b) The hearing referred to in Subsection (a) above shall be conducted as a quasi-judicial hearing under Chapter 7 of Title I of this Code. An affected licensee shall be given at least ten (10) days' notice of the hearing. Any such hearing may be

consolidated with a hearing conducted by the Board under authority granted by the Colorado Liquor Code or Colorado Beer Code.

(c) Judicial review of any final Board action may be had under Rule 106, C.R.C.P., provided that proceedings for such review are filed within twenty-eight (28) days thereafter.

(d) Any person who operates a cabaret in this City without a valid license therefor, or any person who violates any provision of Section 9-2-5 of this Code shall be punished as provided in Section 1-2-1 of this Code.**]**

SECTION 5.

The officers and staff of the City are authorized and directed to perform any and all acts consistent with the intent of this Ordinance to effectuate the policies and procedures described herein.

SECTION 6.

This Ordinance shall become effective thirty (30) days after final action by the Mayor and City Council.

Action by City Council:

Introduced and initial adoption of Ordinance by City Council on _____.

Final adoption of Ordinance by City Council on _____.

_____
President of City Council

Action by the Mayor:

☐ Approved on _____.

☐ Disapproved on _____ based on the following objections:

_____

_____

_____

_____

_____
Mayor

Action by City Council After Disapproval by the Mayor:

☐ Council did not act to override the Mayor's veto.

☐ Ordinance re-adopted on a vote of _____, on_____

☐ Council action on _____failed to override the Mayor's veto.

_____
President of City Council

ATTEST

_____
City Clerk

Background Paper for Proposed Ordinance

COUNCIL MEETING DATE: November 11, 2024

TO: President Mark Aliff and Members of City Council

CC: Mayor Heather Graham

VIA: Marisa Stoller, City Clerk

FROM: Elizabeth Drake, Assistant City Attorney

SUBJECT: AN ORDINANCE CREATING 11-1-612 OF THE PUEBLO MUNICIPAL CODE CREATING THE CRIMINAL CONSEQUENCES FOR MISUSE OF NATURAL MEDICINES

SUMMARY:

Attached for consideration is an Ordinance for the criminal chapter of the Pueblo Municipal Code. This ordinance would add criminal penalties surrounding natural medicines such as prohibitions of underage use, requirements for proper storage, and public intoxication.

PREVIOUS COUNCIL ACTION:

None.

BACKGROUND:

In 2022 the state electorate passed Proposition 122. This proposition legalizes natural medicines starting with psylocibins in January 2025. If approved by the state, other natural medicines will become legal such as mescaline (cactus other than peyote). Colorado Revised Statutes Title 12, Chapter 170 governs the regulation of natural medicines.

This has decriminalized “personal use” and allows for therapeutic use of natural medicines for individuals over the age of 21 years. The laws have significant differences to marijuana and liquor laws and are regulated through the state Professions and Occupations Act and the Department of Regulatory Agencies (DORA), where liquor and marijuana are regulated with the department of Revenue Activities Regulation Act and the Department of Revenue (DOR). It does not allow marijuana businesses to sell natural medicines in the same business, but they can be in the same building. It also limits local governments not to regulate more strictly than the state but allows for regulations as to time and place of business operations.

Colorado is only the second state to legalize natural medicines. As such, these laws are uncharted and untested in the legal system. Concerns have included: how best to address negative impacts on communities such as zoning requirements for natural practitioners and growers, wastewater, nuisances, and safe storage. Safe storage concerns include safety of minors, “attractive nuisance” issues such as theft, and impact on buildings such as mold.

There will be multiple ordinances to effectuate this change including criminal charges and planning and zoning.

This ordinance is regulating criminal behavior. These laws make it clear that possession and use is illegal for those under the age of 21 years. Therefore, this ordinance includes provisions to criminalize possession and use under the age of 21 and providing it to those under that age. Public intoxication is also prohibited by the laws and included as public intoxication on such substances can be disruptive and a safety concern.

State law defines these substances as natural and specifically does not include any synthetics, derivatives or those substances that are, “produced using chemical synthesis, chemical modification, or chemical conversions”. The Pueblo Police Department’s narcotics detectives raised concerns that substances such as dimethyltryptamine (DMT), typically a bark and likely to become legal once approved by the state, can be extracted using caustic and harsh chemicals that cause harm to the community, environment, first responders, and potentially users. Therefore, there is a prohibition on such chemical extractions.

Narcotics Detectives and Code Enforcement Officers raised concerns that they see houses and buildings irrevocably damaged by individuals growing marijuana in them. Damage includes mold, toxic chemicals and water damage. Law enforcement also saw break-ins and robberies rise as a result of marijuana legalization both because of the cash nature of the business and because of plants being visible from public locations. Not only is this a public safety issue, it raises the stress on law enforcement resources. Ordinances requiring appropriate storage were included and based upon marijuana laws.

FINANCIAL IMPLICATIONS:

It is unknown what impact as these are new even across the county.

-

BOARD/COMMISSION RECOMMENDATION:

Not applicable to this Ordinance.

STAKEHOLDER PROCESS:

Input has been obtained from Pueblo Police Department, City prosecutors, Code Enforcement and Planning Departments.

ALTERNATIVES:

If City Council does not approve this Ordinance, there would be no enforcement mechanism for police officers.

RECOMMENDATION:

Approval of the Ordinance.

ATTACHMENTS:

1. ORD - Natural Medicine

ORDINANCE NO. _____

AN ORDINANCE CREATING 11-1-612 OF THE PUEBLO MUNICIPAL CODE CREATING THE CRIMINAL CONSEQUENCES FOR MISUSE OF NATURAL MEDICINES

WHEREAS, the electorate of the State of Colorado passed Proposition 122: Access to Natural Psychedelic Substances and subsequently the Colorado Revised Statutes were modified to accommodate the passing of said proposition, and;

WHEREAS, Pueblo City Council finds that unfettered and/or unregulated access to such substances could be dangerous and directly impact on the health of the community; and

WHEREAS, Pueblo City Council finds that if left unregulated natural medicines would adversely affect the safety of the City; and

WHEREAS, Pueblo City Council finds that the cultivation of such substances, potentially even that of "personal use" will have an environmental impact on the City of Pueblo; and

WHEREAS, It is unlawful, even under the state law to consume natural medicines, or be under their influence in public, or to possess or consume if the individual is under the age of 21 and to effectively enforce the state laws municipal codes are necessary; NOW, THEREFORE,

BE IT ORDAINED BY THE CITY COUNCIL OF PUEBLO, that: (brackets indicate matter being deleted, underscoring indicates new matter being added)

SECTION 1.

Sec. 11-1-612 Natural Medicines - prohibited acts.

(a) As used in this section the following words have the following meanings:

(1) *Natural medicine* means the following substances: psilocybin, or psilocin. It may include the following substances if, and only once they are approved by the state licensing authority: dimethyltryptamine, ibogaine, and/or mescaline but not peyote (lophophra williamsii Lemaire). Natural medicine does not include any synthetic, or synthetic analog of these substances, and does not include a derivative of naturally occurring compound of natural medicine that is produced using chemical synthesis, chemical modification, or chemical conversion.

(2) *Openly* means occurring or existing in a manner that is unconcealed, undisguised, or obvious.

(3) *Publicly* means:

a. Occurring or existing in a public place;

b. Occurring or existing in any place that is commonly or usually open or accessible by the general public; or

c. Occurring or existing in any outdoor location where the

consumption or being under the influence of natural medicine is clearly observable from a public place.

(4) *Public place* means a place to which the public or a substantial number of the public have access, and includes, but is not limited to, parks, playgrounds, open space areas, trails, paths, sidewalks, streets, highways, and public rights-of-way, public buildings, transportation facilities, schools, places of amusement, mercantile establishments, shopping centers, places of business usually open to the general public, the common areas of any public or private buildings or facilities, parking lots, and vehicles in or upon such places.

(b) It shall be unlawful and a Class 1 municipal offense for any person to consume, use, or be under the influence of natural medicine or natural medicine products openly and publicly or in a manner that endangers others.

(1) It shall not be an offense under Subsection (b) of this Section if the consumption of natural medicine is occurring on private residential property and the person consuming the natural medicine is:

a. An owner of the property; or

b. A person who has a leasehold interest in the property; or

c. Any other person who has been granted express or implied permission to consume natural medicine on the property by the owner or the lessee of the property.

(c) It shall be unlawful and a Class 1 municipal offense for any person to produce, manufacture, or process natural medicine or products containing natural medicine with the use of chemicals for the purposes of enhancing, concentrating, or extracting dimethyltryptamine; ibogaine; mescaline; psilocybin; or psilocyn or any alkaloid, salt, derivative, preparation, compound, or mixture, whether natural or synthesized, of dimethyltryptamine; ibogaine; mescaline; psilocybin; or psilocyn.

(d) It shall be unlawful and a Class 1 municipal offense for any person to provide, gift, sell, procure, leave available for, or by any means hand off any natural medicine to any person under the age of twenty-one (21) years.

(e) It shall be unlawful and a Class 1 municipal offense for any person under twenty-one (21) years of age to possess, consume or use natural medicine or products containing natural medicine.

(f) It shall be unlawful and a Class 1 municipal offense to store any natural medicine unless it is:

(1) in a closed container that conceals the contents; and

(2) the storage is locked and secured in such a way to prevent access by anyone under the age of twenty-one (21) years; and

(3) is secured in such a way as to prevent theft.

(g) It shall be unlawful and a Class 1 misdemeanor to grow, cultivate, process or produce natural medicines for personal use unless it is:

(1) in a secured locations that conceals the activity; and

(2) is locked and secured in such a way to prevent access by anyone under the age of twenty-one (21) years, and to prevent theft, burglary, trespass and the like; and

(3) in an area separate and distinct from any residence, such as a shed whether attached or detached; and

(4) in compliance with all applicable zoning, water, nuisance, or any other similar ordinance, state law, or regulation.

(h) It shall be unlawful and a Class 1 municipal offense to provide, sell, gift, or convey by any means natural medicines for therapeutic uses without the appropriate state licensing.

SECTION 2.

The officers and staff of the City are authorized and directed to perform any and all acts consistent with this Ordinance to implement the policies and procedures described herein.

SECTION 3.

This Ordinance shall become effective thirty (30) days after the date of final action by the Mayor and City Council.

Action by City Council:

Introduced and initial adoption of Ordinance by City Council on _____.

Final adoption of Ordinance by City Council on _____.

_____
President of City Council

Action by the Mayor:

☐ Approved on _____.

☐ Disapproved on _____ based on the following objections:

_____

_____

_____

_____

_____
Mayor

Action by City Council After Disapproval by the Mayor:

☐ Council did not act to override the Mayor's veto.

☐ Ordinance re-adopted on a vote of _____, on_____

☐ Council action on _____failed to override the Mayor's veto.

_____
President of City Council

ATTEST

_____
City Clerk

Docusign Envelope ID: 1DDD049B-FCF9-4559-95A9-751907C4636E

Background Paper for Proposed Resolution

COUNCIL MEETING DATE: November 11, 2024

TO: President Mark Aliff and Members of City Council

CC: Mayor Heather Graham

VIA: Marisa Stoller, City Clerk

FROM: Regina Maestri, Councilor
Dennis Flores, Councilor

SUBJECT: A RESOLUTION AUTHORIZING PAYMENT FROM THE COUNCIL CONTINGENCIES ACCOUNT IN THE 2024 GENERAL FUND BUDGET TO HISTORIC PUEBLO, INC. IN THE AMOUNT OF $1,000 TO SPONSOR THE DAMON DAYS BANQUET AT THE UNION DEPOT ON FRIDAY, FEBRUARY 7, 2025

SUMMARY:

Attached for consideration is a request for support of Historic Pueblo, Inc. in the amount of $1,000 to sponsor the Damon Days Banquet on February 7, 2025.

PREVIOUS COUNCIL ACTION:

Council supported this event for $1,000 in 2023 and 2022.

BACKGROUND:

City Council Members Dennis Flores & Regina Maestri is requesting $1,000 to sponsor a table at the Damon Days Guys and Dolls for Scholars banquet. This event supports scholarships to CSU Pueblo and PCC students in the fields of history, English and journalism - fields that empower communities by sharing stories that inform and connect us.

FINANCIAL IMPLICATIONS:

Payment of funds in the amount of $1,000 would be paid from the Council Contingencies Account in the 2024 General Fund Budget to Historic Pueblo, Inc.

BOARD/COMMISSION RECOMMENDATION:

N/A

STAKEHOLDER PROCESS:

N/A

ALTERNATIVES:

City Council could choose not to authorize funding for this purpose.

RECOMMENDATION:

This Resolution is at the request of Council Members Dennis Flores and Regina Maestri.

ATTACHMENTS:

1. Guys&Dolls City Invite
2. Guys&Dolls Sponsorship Levels
3. Colorado Secretary of State - Organization Record Confirmation Historic Pueblo 10302024
4. 2024 Contingencies (Council) Historic Pueblo Damon Days

Docusign Envelope ID: 1DDD049B-FCF9-4559-95A9-751907C4636E

RESOLUTION NO. 15822

A RESOLUTION AUTHORIZING PAYMENT FROM THE COUNCIL CONTINGENCIES ACCOUNT IN THE 2024 GENERAL FUND BUDGET TO HISTORIC PUEBLO, INC. IN THE AMOUNT OF $1,000 TO SPONSOR THE DAMON DAYS BANQUET AT THE UNION DEPOT ON FRIDAY, FEBRUARY 7, 2025

BE IT RESOLVED BY THE CITY COUNCIL OF PUEBLO, that

SECTION 1.

Payment in the amount of $1,000 from the Council Contingencies Account in the 2024 General Fund Budget is authorized to be paid to Historic Pueblo, Inc. to sponsor the Damon Days Banquet at the Union Depot on Friday, February 7, 2025.

SECTION 2.

The officers and staff of the City are authorized to perform any and all acts consistent with the intent of this Resolution to effectuate the policies and procedures described herein.

SECTION 3.

This Resolution shall become effective upon passage and approval.

INTRODUCED: November 11, 2024

BY: Regina Maestri
MEMBER OF CITY COUNCIL

APPROVED: DocuSigned by: Mark Aliff B7A4E51823AB462...
PRESIDENT OF CITY COUNCIL

ATTESTED BY: DocuSigned by: 7C02EBDFFC3D43C...
CITY CLERK

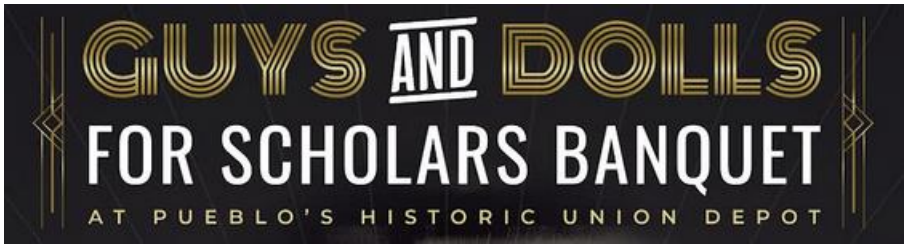

Councilman Flores,

How would the City like to be part of a legacy that not only celebrates Pueblo's rich storytelling history but also supports the next generation of writers, journalists, and historians?

My name is Carla Hendrickson, and I'm writing on behalf of Damon Runyon Days, a local committee of a 501(c)3 nonprofit dedicated to honoring author and journalist Damon Runyon, who called Pueblo his hometown. As I think you are aware, we honor his legacy, by raising scholarship funds for students studying history, English, and journalism at Colorado State University Pueblo and Pueblo Community College.

We are hosting the "Damon Days Banquet" February 7, 2025 and are seeking sponsors for this event. Our attendees are active community members who value supporting local businesses and initiatives, especially those that strengthen our community through storytelling and education.

As a sponsor at the $1,000 level, the city logo will be featured in event promotions and programs, and we'd be glad to include branded items for our guests. You'll also receive reserved seating and valuable exposure as a supporter of a meaningful local cause. There are additional offerings at selected sponsorship levels which are provided on the next page.

I'll follow up in a couple of weeks. In the meantime feel free to contact me if you have any questions. We hope we have your support and look forward to partnering with the City of Pueblo to help future story

Appreciatively,
Carla

Carla Hendrickson
Damon Runyon Days
Committee of Historic Pueblo, Inc.
carlahendrickson@gmail.com
(719) 583-1633
(970) 565-8907 (c)

Banquet Sponsorship Levels

$2,500 Editor-in-Chief

- Two tables of 8 with select reserved seating, table signage, recognition at event and complimentary wine tickets for all attendees
- Sponsor logo featured in banquet program
- Sponsor recognition in pre-event publicity and shout outs on our Facebook page
- Opportunity to provide company swag to all attendees
- Individual swag bags for guests, including:
    - Tickets for a train ride with the Pueblo Railway Museum
    - Passes to visit local museums
    - A Damon Runyon DVD

$1,000 Managing Editor

- One table of 8 with select reserved seating, table signage and recognition at event
- Sponsor logo featured in banquet program
- Sponsor recognition in pre-event publicity and shout outs on our Facebook page
- Opportunity to provide company swag to all attendees
- Individual swag bags for guests, including:
    - Tickets for a train ride with Pueblo Railway Museum
    - Passes to visit local museums

$500 Senior Reporter/Journalists

- Reserved seating for 4
- Sponsor logo in banquet program

$250 Copy Editor

- Reserved seating for 2
- Sponsor logo in banquet program

Checks payable to fiscal agent: Historic Pueblo, Inc., a nonprofit, P.O. Box 2386 Pueblo, CO 81005, Tax ID # 33-1006168

Sponsorship level: _____$2,500 _____$1,000 _____$500 _____ $250_____ Other

Contact person: _____

Business name: _____

Business webpage: _____

Address:_____ _____

_____

Email:_____

Phone:_____

GUYS AND DOLLS FOR SCHOLARS BANQUET AT PUEBLO'S HISTORIC UNION DEPOT

Committee members: Leticia Steffen, CSU Pueblo; Brad Bowers, PCC; Constance Little, PCC & CSU P; Halka Brunerova, CSU P; Jennifer Mullen, Corinne Koehler and Carla Hendrickson.

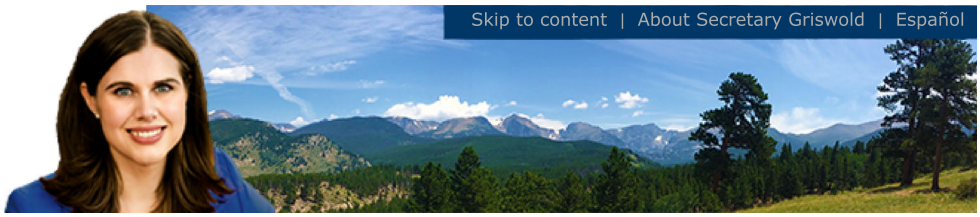

Organization Record Confirmation

Review and select "Confirm" if this entity is the correct business organization.

ID Number:	20021122168
Name:	HISTORIC PUEBLO, INC.
Principal Street Address:	905 Berkley Ave, Pueblo, CO, 81004, US
Principal Mailing Address:	PO Box 2386, Pueblo, CO, 81004, US
Registered Agent:	Eric A Bernauer
Registered Agent Street Address:	905 Berkley Ave, Pueblo, CO, 81004, US
Registered Agent Mailing Address:	PO Box 2386, Pueblo, CO, 81004, US
Status:	Good Standing
Form:	Nonprofit Corporation
Jurisdiction:	CO
Formation Date:	2002-05-07

Previous Page Confirm

DATE	BALANCE IN 2024 CONTINGENCIES ACCOUNT		DEBIT	CREDIT	BALANCE
	Beginning Balance				$ 100,000.00
Bal. Fwd.	Desiree Tamlich - Mural Levee Project Remaining Balance		$ 1,500.00		$ 98,500.00
1/8/24	Mt. Carmel Veterans Services Salute to Heroes Event		$ 1,000.00		$ 97,500.00
1/22/24	PFP Sun Soil Water Ag Summit		$ 2,000.00		$ 95,500.00
1/22/24	Latino Chamber 45th Anniversary Dinner Table		$ 1,100.00		$ 94,400.00
1/22/24	Boys & Girls Club Champions of Youth Dinner VIP Table		$ 1,800.00		$ 92,600.00
2/5/24	Desiree Tamlich - Mural Levee Project Remaining Balance		$ 1,500.00		$ 91,100.00
2/12/24	Pueblo Friends of the Arkansas Trout on the Routt		$ 250.00		$ 90,850.00
2/26/24	Pueblo Child Advocacy Center Blue Sneaker Ball		$ 1,200.00		$ 89,650.00
3/11/24	Pueblo Children's Chorale		$ 3,000.00		$ 86,650.00
3/11/24	Latino Veterans Profiles in Courage		$ 1,500.00		$ 85,150.00
3/11/24	Mariposa Center for Safety - Mother's Day		$ 1,000.00		$ 84,150.00
3/11/24	Hip Hop Festival - Mad Fresh Productions		$ 2,000.00		$ 82,150.00
3/11/24	Super Team PCSO - St. Baldricks Head Shaving Event		$ 1,000.00		$ 81,150.00
3/11/24	Pueblo Has Talent Event		$ 3,800.00		$ 77,350.00
3/25/24	Southern Colorado Press Club Sheep Dip		$ 1,000.00		$ 76,350.00
3/25/24	Juneteenth Organization		$ 1,000.00		$ 75,350.00
3/25/24	El Movimiento Sigue fiscal sponsor for Cinco de Mayo		$ 2,000.00		$ 73,350.00
3/25/24	Boys & Girls Club the PLACE Community Block Party		$ 1,000.00		$ 72,350.00
3/25/24	The ARC of Pueblo Golden Tortilla		$ 400.00		$ 71,950.00
4/8/24	Southern Colorado Equality Alliance Spring Fling		$ 280.00		$ 71,670.00
4/22/24	C Cubed Training - Girls in IT Day		$ 700.00		$ 70,970.00
4/22/24	Downtown Association Levee Walk		$ 1,000.00		$ 69,970.00
5/13/24	AMR Safety Jam		$ 2,000.00		$ 67,970.00
5/13/24	Boy Scout Troop 19		$ 1,000.00		$ 66,970.00
5/28/24	Sangre de Cristo Arts Center Gala		$ 1,500.00		$ 65,470.00
5/28/24	Pueblo Zoo - Zoofari		$ 1,500.00		$ 63,970.00
5/28/24	CSU Pueblo President's Gala		$ 200.00		$ 63,770.00
6/10/24	District 60 Summer Musical		$ 1,000.00		$ 62,770.00
6/24/24	Pueblo Spay and Neuter Now		$ 1,125.00		$ 61,645.00
6/24/24	Colorado State Fair Fiesta Committee Noche de Fiesta		$ 500.00		$ 61,145.00
6/24/24	RMSER: Youth Kickback Events		$ 1,000.00		$ 60,145.00
6/24/24	PDI Dancing with the Pueblo Starz		$ 1,250.00		$ 58,895.00
7/8/24	American Cancer Society Relay for Life		$ 1,500.00		$ 57,395.00
7/8/24	Assistance League - Operation School Bell		$ 2,000.00		$ 55,395.00
7/8/24	A Caring Pregnancy Center Annual Fundraiser		$ 1,500.00		$ 53,895.00
7/8/24	~~Mad Fresh Productions - Multicultural Festival~~		$ -		$ 53,895.00
7/22/24	Genealogical Society of Hispanic America		$ 2,000.00		$ 51,895.00
7/22/24	Elks Brotherhood #90		$ 2,000.00		$ 49,895.00
8/12/24	Pueblo Chile Balloon Fest		$ 2,500.00		$ 47,395.00
8/12/24	Servicios de la Raza Children's Day		$ 2,000.00		$ 45,395.00
8/26/24	Southern Colorado Fashion and Fall Showcase		$ 1,000.00		$ 44,395.00
8/26/24	Mariposa Center for Safety - Tribute to Women		$ 1,000.00		$ 43,395.00
8/26/24	Spark the Change Suicide Memory Walk		$ 1,500.00		$ 41,895.00
8/26/24	Latino Chamber Tostada Event		$ 1,000.00		$ 40,895.00
9/9/24	Pueblo Choral Society Old Fashioned Christmas Concert		$ 2,500.00		$ 38,395.00
9/9/24	Latino Chamber Lifetime Achievement Awards		$ 1,000.00		$ 37,395.00
10/15/24	Latino Chamber Development - Festival of Trees		$ 1,000.00		$ 36,395.00
10/15/24	NAACP Freedom Fund Banquet		$ 750.00		$ 35,645.00
10/15/24	Pueblo Library Booklovers Ball		$ 1,750.00		$ 33,895.00
10/15/24	Pueblo Downtown Association Parade of Lights		$ 1,250.00		$ 32,645.00
10/15/24	PAWS for Life Leachpit		$ 7,500.00		$ 25,145.00
11/11/24	Historic Pueblo Damon Days Banquet		$ 1,000.00		$ 24,145.00
					$ 24,145.00
					$ 24,145.00
					$ 24,145.00

Docusign Envelope ID: 2B691D6E-65E1-4341-B948-550BBABBDAED

City Clerk's Office Item # R1

Background Paper for Proposed Ordinance

COUNCIL MEETING DATE: November 11, 2024

TO: President Mark Aliff and Members of City Council

CC: Mayor Heather Graham

VIA: Marisa Stoller, City Clerk

FROM: Carla Sikes, City Attorney

SUBJECT: AN ORDINANCE ADDING SECTION 304 OF CHAPTER 1 OF TITLE XI OF THE PUEBLO MUNICIPAL CODE ADDING THE OFFENSE OF INTERFERENCE WITH A CITY EMPLOYEE

SUMMARY:

Attached for consideration is a proposed addition to the Pueblo Municipal Code adding an offense to interfere, including threatening, harassing, etc., an employee of the City.

PREVIOUS COUNCIL ACTION:

No prior action.

BACKGROUND:

While performing their duties, employees of City often face: harassment, including at their offices and counters; threats toward their safety; and dangerous situations sometimes in remote locations.

By July of 2024, Park Rangers had been threatened with deadly weapons three times and faced constant threats to their physical safety, one of those incidents involved an individual with two knives. Often, Park Rangers are in areas where police support is delayed such as out on a trail animal Control officers face threats virtually, if not actually, daily. They receive death threats, and individuals with deadly weapons such as knives. Examples include an individual who went inside his house and came out with gun holstered on his hip (those actions do not quite rise to menacing but are intended to intimidate) while yelling at officers. Another example is animal control officers having lawn furniture thrown at them. Code enforcement officers have had incidents where they were shot at and on at least one occasion an attempt to run them over with a vehicle. They have a policy to leave when things are heated and apply for a search warrant and return with assistance. However, they are still facing constant threats and harassment and have

Docusign Envelope ID: 2B691D6E-65E1-4341-B948-550BBABBDAED

had individuals release dogs out at them.

Parking Enforcement has daily harassment. After consulting with the supervisor of Parking Enforcement it was suggested that the tow companies engaged by City are harassed regularly.

Community Service Program at the Municipal Court often faces harassment and threats while out in the community in the performance of their duties. Similar to those listed above, they are placed in these situations due to the nature of the work they perform for the City.

All these agents are trained and specifically have policies to leave situations that are dangerous or escalating. However, many times they are unable to quickly or safely extricate themselves. City employees who work at windows such as in Municipal Court and Sales Tax receive threats and harassment regularly. These are situations where employees cannot extricate themselves quickly. Additionally, they are often threatened in ways that are not covered by other already existing regulations such as menacing, or they do not qualify as law enforcement for state statutes such as second-degree assault on a peace officer.

State statute does include prohibitions for attempting to influence a public official, typically through deceit to influence a decision. Given the nature of the offense in this section for an individual to harass or threaten in attempt to thwart a City agent from completing their duties, and that it is in the interest of the City to discourage individuals from using deceit to influence City Agents, it is logical to include that in this section.

FINANCIAL IMPLICATIONS:

None.

BOARD/COMMISSION RECOMMENDATION:

None.

STAKEHOLDER PROCESS:

None.

ALTERNATIVES:

Not approving these changes will mean these violations will remain class 2 municipal offenses.

RECOMMENDATION:

Accept the changes.

ATTACHMENTS:

1.
Ordinance for harassment of public official

Docusign Envelope ID: 2B691D6E-65E1-4341-B948-550BBABBDAED

ORDINANCE NO. 10835

AN ORDINANCE ADDING SECTION 304 OF CHAPTER 1 OF TITLE XI OF THE PUEBLO MUNICIPAL CODE ADDING THE OFFENSE OF INTERFERENCE WITH A CITY EMPLOYEE

WHEREAS, The City of Pueblo ("City") is a Colorado home rule municipality, with all powers and authority vested under Colorado law; and

WHEREAS, Individuals who are engaged in City business are facing threats and harassment with the intent to change or prevent them from preforming the duties to which they are assigned; and

WHEREAS, there are times these acts are not already covered by other criminal codes; and

WHEREAS, City has an interest in protecting those engaged in City business; and

WHEREAS, impeding those engaged in City Business thwarts the obligations of City to enforce rules, laws, and ordinances; NOW, THEREFORE,

BE IT ORDAINED BY THE CITY COUNCIL OF PUEBLO, that: (brackets indicate matter being deleted, underscoring indicates new matter being added)

SECTION 1.

Section 11-1-304 of the Pueblo Municipal Code is hereby enacted to read as follows:

Sec. 11-1-304

(a) For the purposes of this section, "*City Agent" includes*, all persons qualified as employees under Section 1-5 of the Charter of the City of Pueblo, and those persons qualified as officers under Article 2 of the Charter of the City of Pueblo, and all those persons qualified under Section 8-5 of the Charter of the City of Pueblo as Unclassified and Classified Service. The term City Agent also includes part-time employees and employees of designated contractors while engaged in City business and the execution of their duties assigned under their contract, and tow truck operators contacted by City for nonconsensual tows or tows done for the purposes and/or request of law enforcement. The term City Agent includes, but is not limited to, Park Rangers, Code Enforcement Officers, Parking Enforcement Officers, and Animal Services Officers and employees.

(b) A person commits intimidating a City Agent if, by use of a threat, act of harassment, or act of harm or injury, he or she intentionally attempts to or does prevent the City Agent from performing the duties and responsibilities of his or her position.

(c) A person commits attempting to influence a City Agent, if, by means of deceit, threat of violence or economic reprisal against a person or property, with the intent thereby to alter or affect the City Agent's decision, vote, opinion, or action concerning a matter which was to be considered or performed by the City Agent or their department or body of which the City.

(d) Violation of this section is a Class 1 Municipal Offense.

SECTION 2.

The officers and staff of the City are authorized and directed to perform any and all acts consistent with the intent of this Ordinance to effectuate the policies and procedures described herein.

SECTION 3.

This Ordinance shall become effective thirty (30) days after final action by the Mayor and City Council.

Action by City Council:

Introduced and initial adoption of Ordinance by City Council on October 28, 2024.

Final adoption of Ordinance by City Council on November 11, 2024.

DocuSigned by:
Mark Aliff
B7A4F51823AB462...
President of City Council

Action by the Mayor:

☒ Approved on 11/12/2024 | 10:40 AM MST.

☐ Disapproved on _____ based on the following objections:

_____

_____

_____

_____

Signed by:
3A85950B7BCA462...
Mayor

Action by City Council After Disapproval by the Mayor:

☐ Council did not act to override the Mayor's veto.

☐ Ordinance re-adopted on a vote of _____, on_____

☐ Council action on _____failed to override the Mayor's veto.

_____
President of City Council

ATTEST

DocuSigned by:

_____
7C02EBDFFC3D43C...
City Clerk

Docusign Envelope ID: 2B691D6E-65E1-4341-B948-550BBABBDAED

City Clerk's Office Item # R2

Background Paper for Proposed Ordinance

COUNCIL MEETING DATE: November 11, 2024

TO: President Mark Aliff and Members of City Council

CC: Mayor Heather Graham

VIA: Marisa Stoller, City Clerk

FROM: Carla Sikes, City Attorney

SUBJECT: AN ORDINANCE AMENDING SECTIONS 402 AND 403 OF CHAPTER 1 OF TITLE XI OF THE PUEBLO MUNICIPAL CODE AMENDING THE CLASS OF OFFENSE FOR DAMAGING, DEFACING OR DESTRUCTION OF PROPERTY AND AMENDING THE CLASS LEVEL FOR SAID OFFENSES.

SUMMARY:

Attached for consideration is a proposed amendment of the Pueblo Municipal Code 11-1-402 and 11-1-403 regarding damaging, defacing or destruction of property and amending the class level for said offenses.

PREVIOUS COUNCIL ACTION:

This portion of the Pueblo Municipal Code was last modified in 2022 to modify the monetary value of the offenses reflecting changes in the state law.

BACKGROUND:

Currently, damaging, defacing or destruction of property is a Class 2 municipal offense. Both sections prohibit similar behavior with the difference being Section 11-1-402 prohibits acts against privately owned property and Section 11-1-403 prohibits acts against City property. This law is similar to the state Criminal Mischief statute (C.R.S. §18-4-501).

Colorado Senate Bill 21-271, titled Misdemeanor Reform, modified state sentencing ranges for misdemeanors and eliminated Class 3 misdemeanors altogether. At the same time, it modified the level of crime for Criminal Mischief in state court. The maximum sentence for a standard (i.e. without aggravators) Class One misdemeanor is up to 364 days in jail and/or a fine of up to $1,000. (Note: maximum sentences do not preclude alternative sentences such as probation). The maximum sentence for a Class 1 municipal offense under PMC is a sentence of up to 364 days in jail and/or a fine of up to $1,000. Thus, the two levels of offenses are analogous.

Docusign Envelope ID: 2B691D6E-65E1-4341-B948-550BBABBDAED

Further, the state statutes divide criminal mischief by value of the damage being less than $300 a petty offense, $300-$999.99 a Class 2 misdemeanor, and $1,000 to $1,999.99 a Class 1 misdemeanor. It is suggested that we divide our levels out similarly with damage less than $999.99 being a Class 2 municipal offense, and $1,000 to $2000 being a Class 2 municipal offense.

FINANCIAL IMPLICATIONS:

None.

BOARD/COMMISSION RECOMMENDATION:

None.

STAKEHOLDER PROCESS:

None.

ALTERNATIVES:

Not approving these changes will mean these violations will remain Class 2 municipal offenses.

RECOMMENDATION:

Accept the changes.

ATTACHMENTS:

1. Damaging, defacing or destruction of City property Ordinance

Docusign Envelope ID: 2B691D6E-65E1-4341-B948-550BBABBDAED

ORDINANCE NO. 10836

AN ORDINANCE AMENDING SECTIONS 402 AND 403 OF CHAPTER 1 OF TITLE XI OF THE PUEBLO MUNICIPAL CODE AMENDING THE CLASS OF OFFENSE FOR DAMAGING, DEFACING OR DESTRUCTION OF PROPERTY, AND DAMAGING, DEFACING OR DESTRUCTION OF CITY PROPERTY.

WHEREAS, The City of Pueblo ("City") is a Colorado home rule municipality, with all powers and authority vested under Colorado law; and

WHEREAS, the equivalent state law is Criminal Mischief found in C.R.S. §18-4-501; state law makes this crime a petty offense if the damage is less than three hundred dollars, a Class 2 misdemeanor if damage is three hundred dollars or more but less than one thousand dollars, and a Class 1 misdemeanor for damage greater than one thousand dollars but less than two thousand dollars; and

WHEREAS, the state law sentencing structure was changed effective March 2022 in the Misdemeanor Reform Bill; and

WHEREAS, it is in the public interest to deter individuals from damaging property belonging to another, or belonging to the City;

WHEREAS, this modification will align the City Ordinances with state statutes with regards to the level of offense; NOW, THEREFORE,

BE IT ORDAINED BY THE CITY COUNCIL OF PUEBLO, that: (brackets indicate matter being deleted, underscoring indicates new matter being added)

SECTION 1.

Section 402 of Chapter 1 of Title XI of the Pueblo Municipal Code is hereby amended and enacted to read as follows;

Sec. 11-1-402. - Damaging, defacing or destruction of property.

a) It shall be unlawful for any person to knowingly damage, deface, destroy or injure the real or personal property of one (1) or more other persons in the course of a single episode where the aggregate damage to the real or personal property is less than two thousand dollars ($2,000.00).

(b) Damaging, defacing or destruction of property **of a value of one thousand dollars ($1,000) or more but less than two thousand dollars ($2,000)** is a Class [2] **1** municipal offense, provided that if the person found guilty of violating Subsection (a) was under eighteen (18) years of age on the date of violation, the court shall not impose a jail sentence.

(c) Damaging, defacing or destruction of property of a value of up to nine hundred ninety-nine dollars and ninety-nine cents ($999.99) is a Class 2 municipal offense, provided that if the person found guilty of violating Subsection (a) was under eighteen (18) years of age on the date of violation, the court shall not impose a jail sentence.

SECTION 2.

Section 403 of Chapter 1 of Title XI of the Pueblo Municipal Code is hereby amended and enacted to read as follows;

Sec. 11-1-403. - Damaging, defacing or destruction of City property.

(a) It shall be unlawful for any person to knowingly damage, deface, destroy or injure the real or personal property of the City in the course of a single episode where the aggregate damage to the real or personal property is less than two thousand dollars ($2,000.00).

(b) Damaging, defacing or destruction of City property **of a value of one thousand dollars ($1,000) or more but less than two thousand dollars ($2,000)** is a Class [2] **1** municipal offense, provided that if the person found guilty of violating Subsection (a) was under eighteen (18) years of age on the date of violation, the court shall not impose a jail sentence.

(c) Damaging, defacing or destruction of City property of a value of up to nine hundred ninety-nine dollars and ninety-nine cents ($999.99) is a Class 2 municipal offense, provided that if the person found guilty of violating Subsection (a) was under eighteen (18) years of age on the date of violation, the court shall not impose a jail sentence.

SECTION 3.

The officers and staff of the City are authorized and directed to perform any and all acts consistent with the intent of this Ordinance to effectuate the policies and procedures described herein.

SECTION 4.

This Ordinance shall become effective thirty (30) days after final action by the Mayor and City Council.

Action by City Council:

Introduced and initial adoption of Ordinance by City Council on October 28, 2024.

Final adoption of Ordinance by City Council on November 11, 2024.

DocuSigned by:
Mark Aliff
B7A4F31823AB462...
President of City Council

Action by the Mayor:

☐ Approved on 11/12/2024 | 10:40 AM MST.

☐ Disapproved on _____ based on the following objections:

_____

_____

_____

Signed by:
3A83950B7BCA462...
Mayor

Action by City Council After Disapproval by the Mayor:

☐ Council did not act to override the Mayor's veto.

☐ Ordinance re-adopted on a vote of _____, on_____

☐ Council action on _____failed to override the Mayor's veto.

_____
President of City Council

ATTEST

DocuSigned by:
7C02EBDFFC3D43C...
City Clerk

Docusign Envelope ID: BF8A1119-B7FF-4C7D-8D2E-59811000EBAD

City Clerk's Office Item # S1

Background Paper for Proposed Action Item

COUNCIL MEETING DATE: November 11, 2024

TO: President Mark Aliff and Members of City Council

CC: Mayor Heather Graham

VIA: Marisa Stoller, City Clerk

FROM: Scott Hobson, Acting Director Planning and Community Development

SUBJECT: AN ORDINANCE AMENDING ZONING RESTRICTIONS TO REZONE 2.39-ACRES FROM I-3, HEAVY INDUSTRIAL ZONE DISTRICT; S-1, GOVERNMENT USE ZONE DISTRICT; AND S-3, FLOOD PLAIN DISTRICT ZONE DISTRICT TO I-3, HEAVY INDUSTRIAL ZONE DISTRICT AND TO REZONE 2.72-ACRES FROM S-1, GOVERNMENT USE ZONE DISTRICT TO I-2, INDUSTRIAL ZONE DISTRICT

SUMMARY:

The applicant is requesting to rezone 2.39-acres (parcel 430309001) from I-3, Heavy Industrial; S-1, Government Use; and S-3, Flood Plain District Zone Districts to I-3, Heavy Industrial Zone District. The applicant is also requesting to rezone 2.72-acres (parcel 430320004) from S-1, Government Use Zone District to I-2, Industrial Zone District, to facilitate redevelopment of the former Colorado Department of Transportation Site.

PREVIOUS COUNCIL ACTION:

None.

BACKGROUND:

The proposed rezoning site is made up of two parcels that previously served as the Colorado Department of Transportation (CDOT) Region 2 Headquarters. The southern parcel, 430320004, is zoned S-1, Government Use District and S-3, Floodplain District. It appears that CDOT operations began in this location prior to 1968. The official 1968 Zoning Map shows the eastern portion of this parcel zoned as S-1 Government Use District and the western portion of the parcel as S-3, Floodplain District. The northern parcel, 430309001, was purchased by CDOT in 1978 to expand operations. CDOT operated at this site under the I-3, Heavy Industrial and S-3, Floodplain Zone District, as was originally zoned in 1968. In 1968, the City underwent an expansive update to the zoning code and zoning map. At the time, much of the eastern portion of Fountain Creek was considered 100-year floodplain and was therefore zoned S-3, Floodplain.

Docusign Envelope ID: BF8A1119-B7FF-4C7D-8D2E-59811000EBAD

Resulting in split zoning for many parcels along Fountain Creek. In 2016 CDOT constructed a new headquarters building at 5615 Wills Boulevard. Zell Holdings, LLC, purchased both parcels in 2020 and are requesting to rezone to facilitate redevelopment of the site. The rezoning application states that the property owner intends to continue with the "historic use of the property." According to the application, CDOT's headquarters included offices, vehicle maintenance and repair shops, heavy equipment maintenance and storage, and vehicle repair shops. Zell Holdings is requesting to rezone the property to I-2 and I-3 to
continue the uses listed above.

FINANCIAL IMPLICATIONS:

There are no financial implications for the City.

BOARD/COMMISSION RECOMMENDATION:

The Planning and Zoning Commission, at their October 9, 2024 Regular Meeting, voted 6-0 to recommend approval, Commissioner Maestri absent.

STAKEHOLDER PROCESS:

The Planning Department sent out Notice of the Planning and Zoning Commission Public Hearing to all property owners located within 300 feet of the subject property.

A Public Notice poster was placed on the subject property 15 days prior to the Public Hearing.

ALTERNATIVES:

If City Council does not approve this Ordinance the property will not be zoned in accordance with the Pueblo Municipal Code.

Upon request of City Council, the Ordinance could be returned to the Planning and Zoning Commission for consideration of proposed modifications.

RECOMMENDATION:

Approval of the Ordinance.

ATTACHMENTS:

1. Z-24-07 Combined Attachments

Docusign Envelope ID: BF8A1119-B7FF-4C7D-8D2E-59811000EBAD

ORDINANCE NO. 10837

AN ORDINANCE AMENDING ZONING RESTRICTIONS TO REZONE 2.39-ACRES FROM I-3, HEAVY INDUSTRIAL ZONE DISTRICT; S-1, GOVERNMENT USE ZONE DISTRICT; AND S-3, FLOOD PLAIN DISTRICT ZONE DISTRICT TO I-3, HEAVY INDUSTRIAL ZONE DISTRICT AND TO REZONE 2.72-ACRES FROM S-1, GOVERNMENT USE ZONE DISTRICT TO I-2, INDUSTRIAL ZONE DISTRICT

BE IT ORDAINED BY THE CITY COUNCIL OF PUEBLO, that:

SECTION 1.

The zoning restrictions covering the following described property, and in addition half of all adjacent dedicated roadway and alley rights-of-way, together generally identified in the attached Rezone Exhibit, is hereby changed from I-3, Heavy Industrial, S-1, Government Use, and S-3, Flood Plain Zone Districts to I-2, Industrial Zone District:

APPLICANT HEREBY REQUESTS: That the existing various zonings be changed to Industrial (I-3) and (I-2) as shown and described hereon, to wit:

A parcel of land being a portion of the Southwest Quarter of Section 30, Township 20 South, Range 64 West of the 6th P.M. and being more particularly described as follows:

I-3 Zoning request: BEGINNING at the northwest corner of Block 98, Conley's Addition to East Pueblo, thence easterly along the north line of said Block 98 to the Northeast corner thereof;
Thence Southerly along the Westerly right of way line of Erie Avenue to the intersection of said westerly right of way line of Erie Avenue with the centerline of vacated 10th Street;
THENCE Westerly along said centerline of vacated 10th Street to the intersection of the west line of Block 98, if extended southerly, with the centerline of aforesaid vacated 10th Street;
THENCE Northerly along the westerly lines of vacated 10th Street and aforesaid Block 98 to the Northwest corner of said Block 98 and the POINT OF BEGINNING.
County of Pueblo, State of Colorado.

The above requested I-3 zoning contains 2.39 acres more or less.

I-2 Zoning Request: BEGINNING at the intersection of the westerly right of way line of Erie Avenue with the centerline of vacated 10th Street, as shown on the plat of Conley's Addition to East Pueblo, southerly along the Westerly right of way line of Erie Avenue to the intersection of said westerly right of way line of Erie Avenue with the centerline of vacated 9th Street;
THENCE Westerly along said centerline of vacated 9th Street to the intersection of the west line of Block 98, if extended southerly, with the centerline of aforesaid vacated 9th Street;
THENCE Northerly along the westerly lines of vacated 9th Street and the southerly extension of the westerly line of Block 98 and the westerly line of vacated 10th Street, to the intersection of the westerly line of Block 98, if extended southerly with the centerline of vacated 10th Street;
THENCE Easterly along said centerline of vacated 10th Street to the intersection of the westerly right of way line of Erie Avenue with the centerline of vacated 10th Street and the POINT OF BEGINNING.
County of Pueblo, State of Colorado.

The above requested I-2 zoning contains 2.72 acres more or less.

BLOCK 98: Alley vacated by Ordinance No 789 as recorded December 10, 1909 in Book 344 at Page 381. 10th Street vacated by Resolution dated November 28, 1938 and recorded December 15, 2017 at Reception No. 2091305.
BLOCK 97: Alley vacated by resolution recorded January 12, 1973 in Book 1738 at Page 94, Ninth Street vacated by resolution recorded May 17, 1938 in Book 852 at Page 552 and January 12, 1973 in Book 1738 at Page 93.
Additional area shown hereon located within "Block 97" was owned by the State Department of Highways as referenced in Right-of-Entry agreement per Book 2392, Page 103, and Book 2427, Page 971 of the Pueblo County Records. This area was included within the Special Warranty Deed recorded December 1, 2020 at Reception No. 2202722 of the Pueblo County Records and further evidenced by ALTA/NSPS Land Title Survey performed by Oliver E. Watts, Colo. PE-LS No. 9853 dated September 8, 2020.

SECTION 2.

The officers and staff of the City are authorized to perform any and all acts consistent with the intent of the Ordinance to implement the policies and procedures described herein.

SECTION 3.

This Ordinance shall become effective immediately upon final action by the Mayor and City Council.

Action by City Council:

Introduced and initial adoption of Ordinance by City Council on October 28, 2024.

Final adoption of Ordinance by City Council on November 11, 2024.

DocuSigned by:
Mark Aliff
B7A4F51823AB462...
President of City Council

Action by the Mayor:

☒ Approved on 11/12/2024 | 10:41 AM MST.

☐ Disapproved on _____ based on the following objections:

_____

_____

_____

_____

Signed by:
3A85950B7BCA462...
Mayor

Action by City Council After Disapproval by the Mayor:

☐ Council did not act to override the Mayor's veto.

☐ Ordinance re-adopted on a vote of _____, on _____

☐ Council action on _____ failed to override the Mayor's veto.

_____
President of City Council

ATTEST

DocuSigned by:

_____
7C02EBDFFC3D43C...
City Clerk

ZONE CHANGE

in Blocks 97 and 98, Conley's Addition to East Pueblo, Located in the Southwest Quarter of Section 30, Township 20 South, Range 64 West of the 6th P.M. in Pueblo County, Colorado

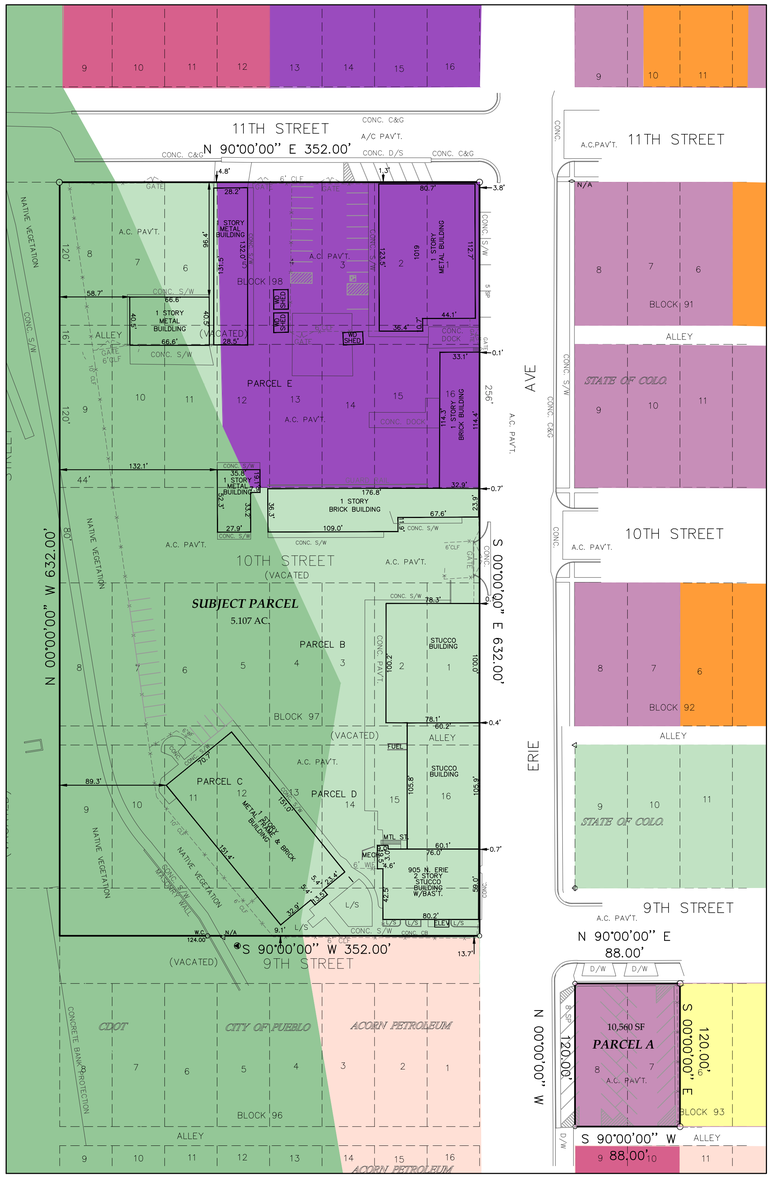

EXISTING ZONING

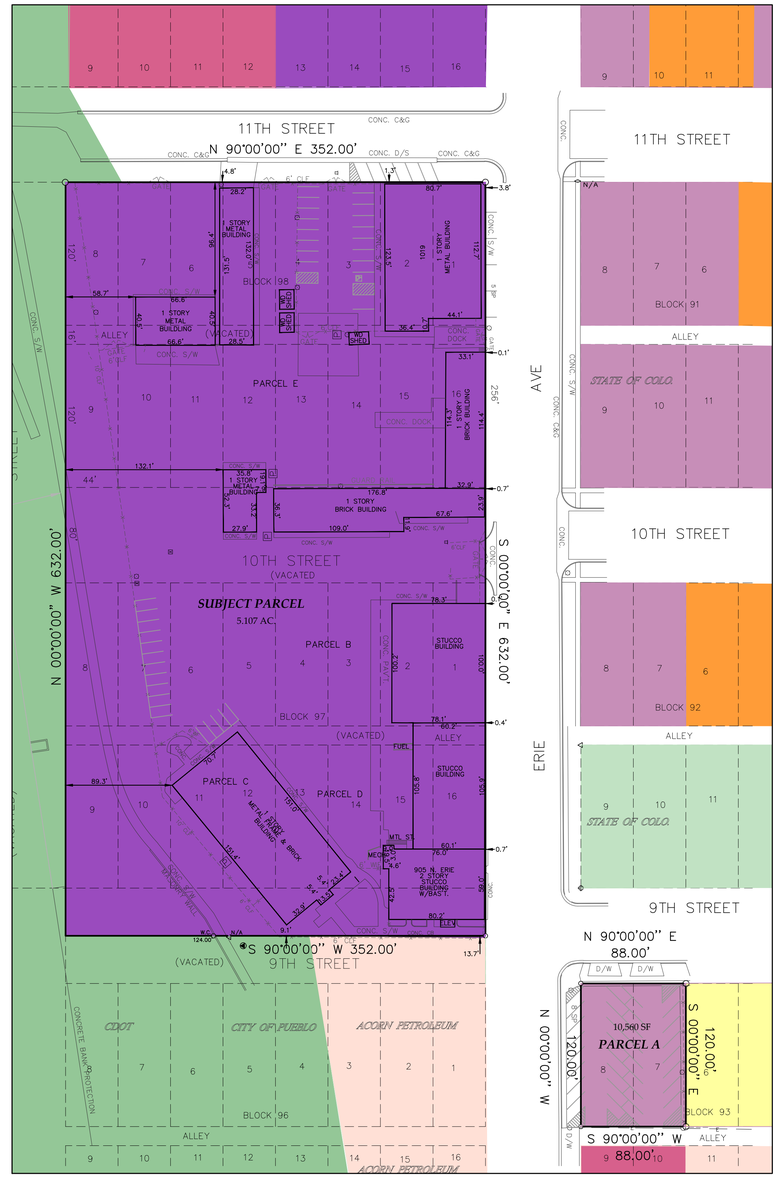

REQUESTED ZONING

APPLICANT HEREBY REQUESTS: That the existing various zonings be changed to Industrial (I-3) as shown and described hereon, to wit:

A parcel of land being a portion of the Southwest Quarter of Section 30, Township 20 South, Range 64 West of the 6th P.M. and being more particularly described as follows:

BEGINNING at the northwest corner of Block 98, Conley's Addition to East Pueblo, thence easterly along the north line of said Block 98 to the Northeast corner thereof;
Thence Southerly along the Westerly right of way line of Erie Avenue to the intersection of said westerly right of way line of Erie Avenue with the centerline of Vacated 9th Street;
THENCE Westerly along said centerline of vacated 9th Street to the intersection of the west line of Block 97, if extended southerly, with the centerline of aforesaid vacated 9th Street;
THENCE Northerly along the westerly lines of vacated 9th Street, Block 97, vacated 10th Street lying between Blocks 97 and 98, and aforesaid Block 98 to the Northwest corner of said Block 98 and the POINT OF BEGINNING.

BLOCK 98: Alley vacated by Ordinance No 789 as recorded December 10, 1909 in Book 344 at Page 381. Portions of 10th Street vacated by Resolution dated November 28, 1938 and recorded December 15, 2017 at Reception No. 2091305. BLOCK 97: Alley vacated by resolution recorded January 12, 1973 in Book 1738 at Page 94, Ninth Street vacated by resolution recorded May 17, 1938 in Book 852 at Page 552 and January 12, 1973 in Book 1738 at Page 93.

County of Pueblo, State of Colorado.

The above requested I-3 zoning contains 5.11 acres more or less.

APPROVAL

By:_____
Department of Planning & Community Development

By:_____
Director of Public Works

APPROVAL ATTESTED BY:

By: _____
Administrative Official

Date:_____

VICINITY MAP

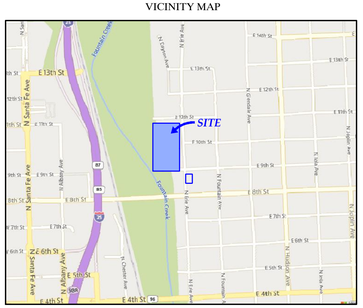

Not to Scale

N

SCALE: 1"=60'

0' 30' 60' 120'

- *I-2 – INDUSTRIAL DISTRICT*
- *I-3 – HEAVY INDUSTRIAL*
- *B-1 – NEIGHBORHOOD BUSINESS*
- *B-3 – HIGHWAY & ARTERIAL BUSINESS*
- *B-4 – CENTRAL BUSINESS DIST.*
- *R-2 – SINGLE FAMILY RESIDENTIAL*
- *R-4 – MIXED RESIDNTIAL*
- *S-1 – GOVERNMENT USE*
- *S-3 – FLOOD PLAIN DIST.*

Notice:
According to Colorado Law, you must commence any legal action based upon any defect in this survey within three (3) years after you first discover such defect. In no event, may any action based upon any defect in this survey be commenced more than ten (10) years from the date of certification shown hereon.

The area being affected by this REZONE REQUEST is 5.1 Ac. ±.

Colorado Land Surveyors, Inc.
184 S. Tiffany Dr., Ste. 106
Pueblo West, CO 81007
719-542-9169

P:\Civil 3D Projects\Surveys\2020\1534-26 REZONE\1534-26.dwg

MINUTES OF REGULAR MEETING

City of Pueblo, Colorado
Wednesday October 9, 2024, 2024 – 3:30 p.m.
City Council Chambers, 1 City Hall Place

The meeting was called to order at 3:30p.m. with Commissioner Castellucci presiding.

Commissioners Present: Mike Castellucci, Patrick Avalos, Alexandra Aznar, Lisa Bailey, Chris Pasternak, Cheryl Spinuzzi.

Commissioners Absent: Regina Maestri

Staff Members Present*:* David Wyatt, Assistant City Attorney, Beritt Odom, Principal Planner, Wade Broadhead, Senior Planner, Cindy Capritta, Land Use Tech. Andrew Hayes, Director of Public Works, Melanie Turner, Traffic Engineer, Joe Martellaro, Associate Engineer II, and Noah Stamm, Drainage Engineer.

Staff Members Absent: Scott Hobson, Acting Director of Planning and Community Development.

Approval of the Agenda: Bailey motioned to move Z-22-10 and S-23-07 to the November 13, 2024, meeting approve the agenda as amended, seconded by Avalos,

Motion Passed: 6-0

Public Meeting Agenda:

Public Hearings:

1. Z-24-07: Rezone: 905 N. Erie Ave., 5.1 acres from S-1 and S-3, Government Use and Flood Plain Zone Districts to I-2 and I-3, Industrial Zone Districts. Generally located west of Erie Ave., east of Fountain Creek, and south of E. 11th Street. Staff Report by Beritt Odom.

Hearing: Applicant Julie Troutt, Colorado Land Surveyors was sworn in and spoke in support of the application. No one appeared in opposition.

Commission Action: Bailey moved to recommend the application to City Council seconded by Spinuzzi.

Motion Passed: 6-0

Mike Castellucci
Chair

Patrick Avalos
Vice Chair

Regina Maestri
City Council Representative

city of PUEBLO colorado
Planning & Zoning Commission

Christopher Pasternak

Alexandra Aznar

Elizabeth Bailey

Cheryl Spinuzzi

Z-24-07

TO:	City of Pueblo, Planning and Zoning Commission
FROM:	Beritt Odom, Principal Planner
THROUGH:	Scott Hobson, Acting Director of Planning and Community Development
DATE:	October 9, 2024
SUBJECT:	Rezone 2.39 acres from I-3, Heavy Industrial Zone District; S-1, Government Use Zone District; and S-3, Flood Plain District Zone District to I-3, Heavy Industrial Zone District. Rezone 2.72 acres from S-1, Government Use Zone District to I-2, Industrial Zone District.
APPLICANT:	Julie Troutt, Colorado Land Surveyors
PROPERTY OWNER:	Zell Holdings, LLC
LOCATION:	Multiple addresses: 905-915 N. Erie (parcel 430320004) and 1003-1019 N. Erie (430309001)
RELATED CASES:	None

REQUEST:
The applicant is requesting to rezone 2.39 acres (parcel 430309001) from I-3, Heavy Industrial Zone District; S-1, Government Use Zone District; and S-3, Flood Plain District Zone District to I-3, Heavy Industrial Zone District. The applicant is also requesting to rezone 2.72 acres (parcel 430320004) from S-1, Government Use Zone District to I-2, Industrial Zone District, to facilitate redevelopment of the former Colorado Department of Transportation Site.

BACKGROUND AND ANALYSIS:

The proposed rezoning site is made up of two parcels that previously served as the Colorado Department of Transportation (CDOT) Region 2 Headquarters. The southern parcel, 430320004, is zoned S-1, Government Use District and S-3, Floodplain District. It appears that CDOT operations began in this location prior to 1968. The official 1968 Zoning Map shows the eastern portion of this parcel zoned as S-1 Government Use District and the western portion of the parcel as S-3, Floodplain District.

The northern parcel, 430309001, was purchased by CDOT in 1978 to expand operations. CDOT operated at this site under the I-3, Heavy Industrial and S-3, Floodplain Zone District, as was originally zoned in 1968. In 1968, the City underwent an expansive update to the zoning code and zoning map. At the time, much of the eastern portion of Fountain Creek was considered 100-year floodplain and was therefore zoned S-3, Floodplain. Resulting in split zoning for many parcels along Fountain Creek.

In 2016 CDOT constructed a new headquarters building in the northern portion of Pueblo, 5615 Wills Blvd. and moved from their longtime home on the east side of the City. Zell Holdings, LLC purchased both parcels in 2020 and are requesting to rezone to facilitate redevelopment of the site. The rezoning application states that the property owner intends to continue with the "historic use of the property." According to the application, CDOT's headquarters included offices, vehicle maintenance and repair shops, heavy equipment maintenance and storage, and vehicle repair shops. Zell Holdings is requesting to rezone the property to I-2 and I-3 to continue the uses listed above.

LAND USE AND PLANNING COMMENTS
CHARACTER AND COMPATIBILITY

Site Character: The southern parcel is currently developed with two large industrial structures that vary in height between one and two stories. The northern parcel is developed with six single story industrial structures. Both sites are completely paved and fenced with chain link.

Neighborhood Compatibility:

North	B-4, Central Business District, developed with single-family residences. I-2, Industrial District, outdoor automobile storage.
East	S-1, Government Use, Colorado State Patrol Offices. I-2, Industrial Zone District, developed with residential and automotive repair uses.
South	B-1, developed with Acorn Petroleum.
West	S-3, Flood Plain District, Fountain Creek.

COMPREHENSIVE PLAN: The site is designated by the Pueblo Regional Comprehensive Plan, 2022, as a Light Industrial Future Land Use.

According to the Comprehensive Plan, Light Industrial future land use areas are characterized by industrial uses that require larger sites, such uses may include outdoor storage, research and development, manufacturing/processing, maintenance/repair shops, warehousing, and distribution. Supporting land uses include limited retail, restaurants, other support services. The proposed storage and vehicle maintenance uses comply with the Light Industrial land use designation.

APPLICATION REQUIREMENT PER §17-6-1 OF THE PUEBLO MUNICIPAL CODE

The applicant's name and address and the name and address of any person, firm or corporation represented by such applicant in the application

❑ Comments **The application contains the required information.**

The interest of the applicant and the interest of the person, firm or corporation represented by the applicant, be it legal, sales development, operation or other interest.

❑ Comments **The applicant wishes to zone the site as industrial to continue the historic industrial uses established at the site by the Colorado Department of Transportation.**

The nature of the amendment and a legal description of the property that would be affected by the amendment.

❑ Comments **The application contains the required information**

A statement of the facts which the applicant believes justify the amendment; provided; however, that when any amendment changing the zoning map is requested, the following additional information shall be furnished:

❑ Comments **The Colorado Department of Transportation developed the site as the Region Two Headquarters, which included industrial uses related to storage, heavy equipment maintenance, and offices. The new owners wish to continue similar private uses.**

A general description of the proposed development to the distance which will be affected; such description including subjects of environmental effect, economic effect and traffic effect, if any; and such description carried out in scope and detail to the extent needed to support the requested amendment and as may be required by the Planning and Zoning Commission.

❑ Comments **The zoning change will facilitate future industrial redevelopment of the site.**

A tentative site plan showing proposed structures, uses, open spaces, facilities for parking and loading and arrangements for pedestrian and vehicular circulation.

❑ Comments **A site plan was not provided**

A statement of the proposed time schedule for beginning and completion of development.

❑ Comments **Time schedule was not provided**

A statement reasonably indicating the applicant's economic responsibility and capability of accomplishing the development for which a zoning amendment is requested.

❑ Comments **A statement reasonably indicating the applicant's economic responsibility was not provided.**

RECOMMENDED ACTION:

If the Planning and Zoning Commission makes the necessary findings of fact, a recommendation to City Council for approval of the rezone request is appropriate.

REFERRAL AGENCIES AND COMMENTS:

- City Public Works-No comment
- City Transportation-No comment
- City Law Department-No comment
- Pueblo Regional Building Department-No comment
- City Fire Department-No comment
- City Wastewater-Provide a sanitary sewer flow comparison between the original zoning and the proposed zoning, Memo from Sonia Mondragon, August 23, 2024.
- City Stormwater-No comment
- City Parks and Recreation Department-No comment
- Xcel Energy-No comment
- Black Hills Energy-No comment
- CDOT-No comment

ATTACHMENTS:

A. Aerial Photograph
B. Zoning Map
C. Comprehensive Plan Map
D. Site Photographs
E. Zoning Exhibit
F. Application
G. Memo from Sonia Mondragon, August 23, 2024

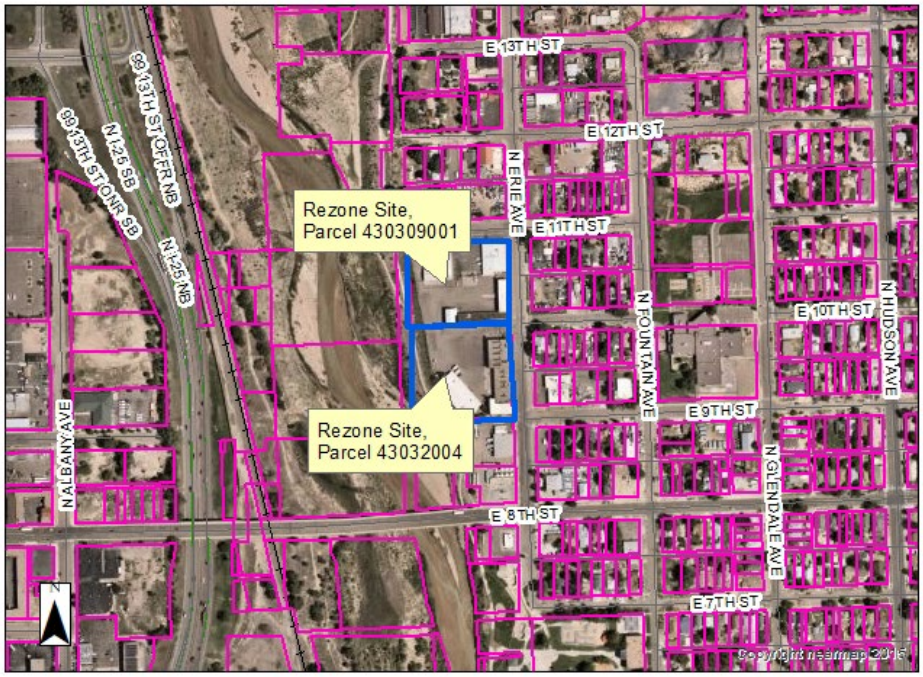

A. Aerial Photograph

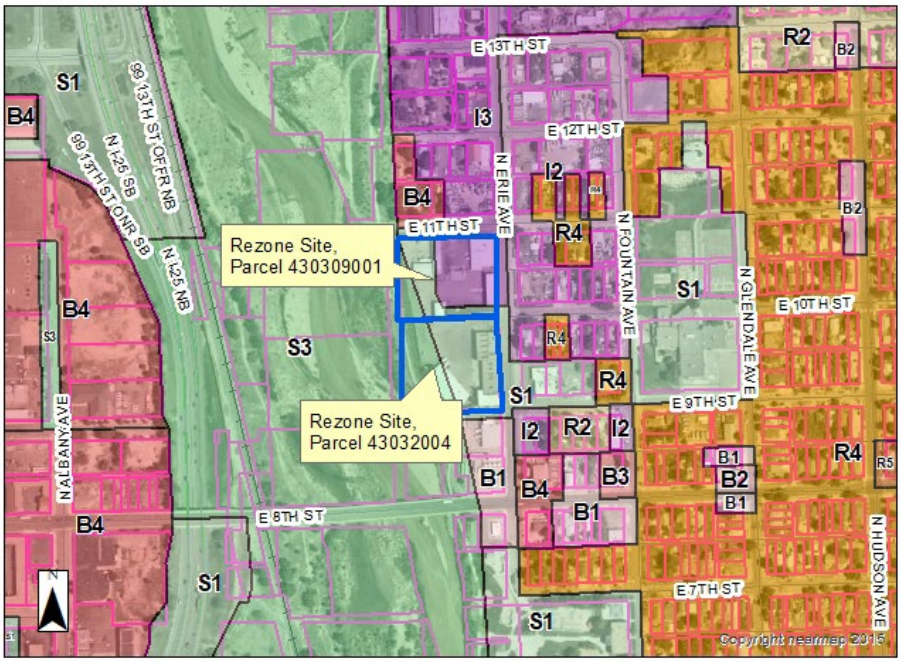

B. Zoning

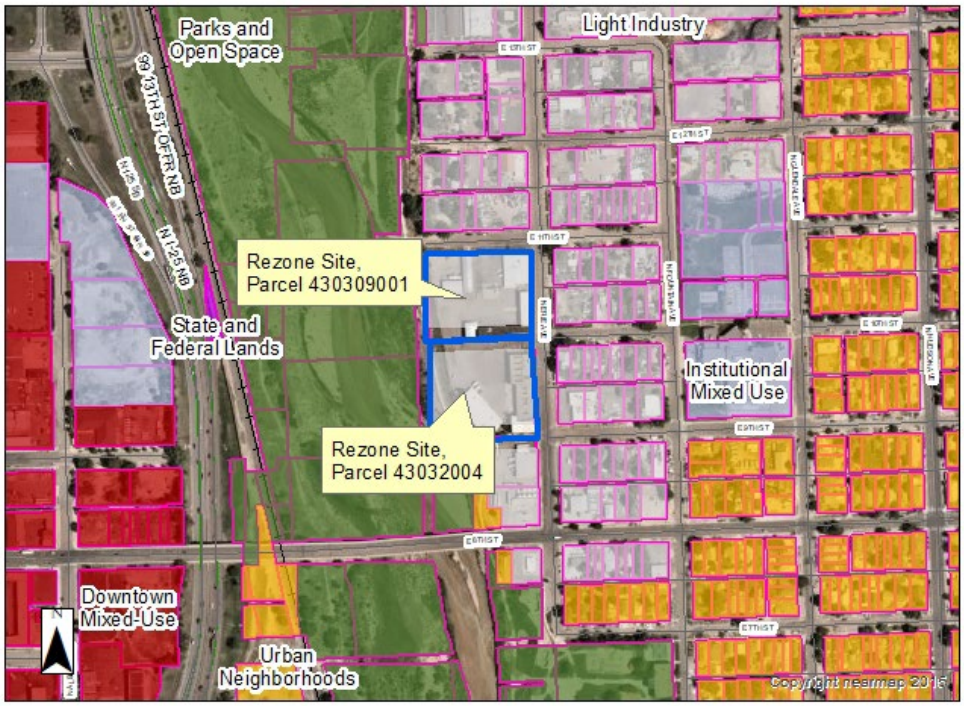

C. Comprehensive Plan

D. Public Notice

D. 905 and 915 N. Erie Ave. (430320004) looking west from N. Erie Ave.

D. 1017 N. Erie Ave. and 1019 N. Erie Ave (430309001) looking west from No. Erie Ave.

ZONE CHANGE

in Blocks 97 and 98, Conley's Addition to East Pueblo, Located in the Southwest Quarter of Section 30, Township 20 South, Range 64 West of the 6th P.M. in Pueblo County, Colorado

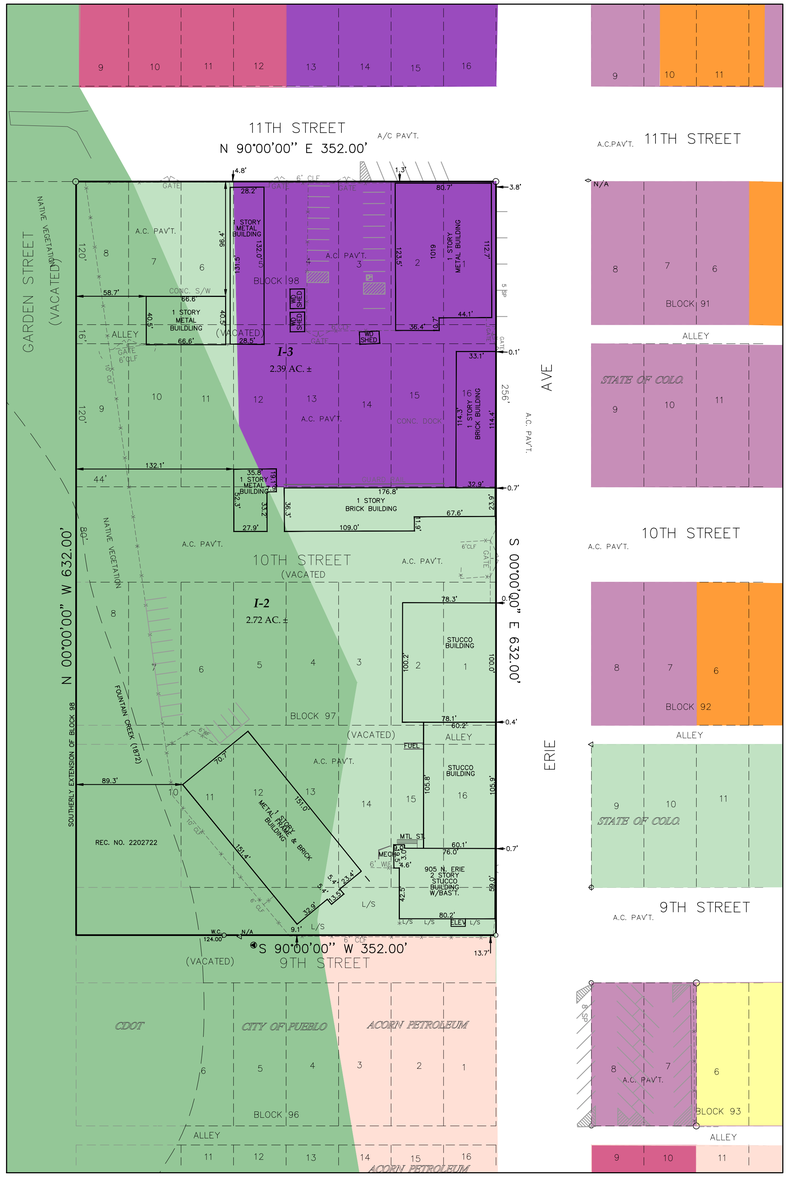

EXISTING ZONING

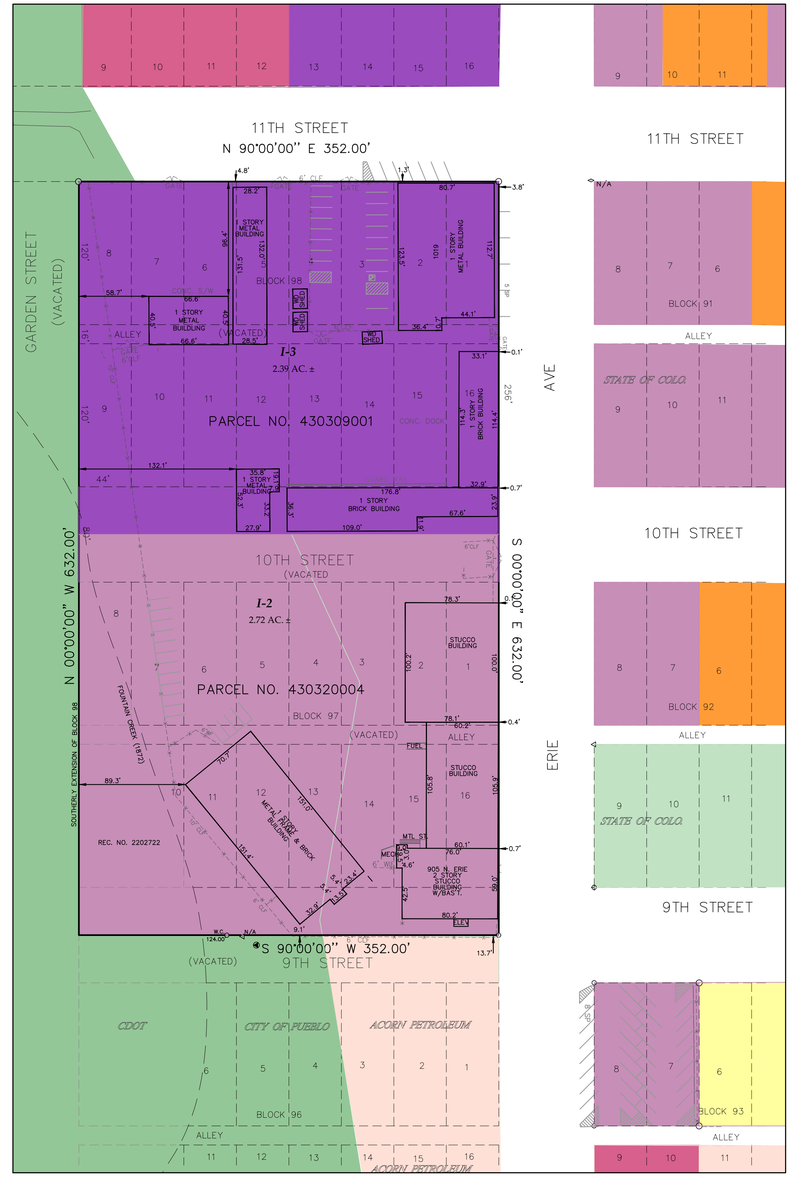

REQUESTED ZONING

APPLICANT HEREBY REQUESTS: That the existing various zonings be changed to Industrial (I-3) and (I-2) as shown and described hereon, to wit:

A parcel of land being a portion of the Southwest Quarter of Section 30, Township 20 South, Range 64 West of the 6th P.M. and being more particularly described as follows:

I-3 Zoning request: BEGINNING at the northwest corner of Block 98, Conley's Addition to East Pueblo, thence easterly along the north line of said Block 98 to the Northeast corner thereof;
Thence Southerly along the Westerly right of way line of Erie Avenue to the intersection of said westerly right of way line of Erie Avenue with the centerline of vacated 10th Street;
THENCE Westerly along said centerline of vacated 10th Street to the intersection of the west line of Block 98, if extended southerly, with the centerline of aforesaid vacated 10th Street;
THENCE Northerly along the westerly lines of vacated 10th Street and aforesaid Block 98 to the Northwest corner of said Block 98 and the POINT OF BEGINNING.
County of Pueblo, State f Colorado.

The above requested I-3 zoning contains 2.39 acres more or less.

I-2 Zoning Request: BEGINNING at the intersection of the westerly right of way line of Erie Avenue with the centerline of vacated 10th Street, as shown on the plat of Conley's Addition to East Pueblo, southerly along the Westerly right of way line of Erie Avenue to the intersection of said westerly right of way line of Erie Avenue with the centerline of vacated 9th Street;
THENCE Westerly along said centerline of vacated 9th Street to the intersection of the west line of Block 98, if extended southerly, with the centerline of aforesaid vacated 9th Street;
THENCE Northerly along the westerly lines of vacated 9th Street and the southerly extension of the westerly line of Block 98 and the westerly line of vacated 10th Street, to the intersection of the westerly line of Block 98, if extended southerly, with the centerline of vacated 10th Street;
THENCE Easterly along said centerline of vacated 10th Street to the intersection of the westerly right of way line of Erie Avenue with the centerline of vacated 10th Street and the POINT OF BEGINNING.
County of Pueblo, State of Colorado.

The above requested I-2 zoning contains 2.72 acres more or less.

BLOCK 98: Alley vacated by Ordinance No 789 as recorded December 10, 1909 in Book 344 at Page 381. 10th Street vacated by Resolution dated November 28, 1938 and recorded December 15, 2017 at Reception No. 2091305.
BLOCK 97: Alley vacated by resolution recorded January 12, 1973 in Book 1738 at Page 94, Ninth Street vacated by resolution recorded May 17, 1938 in Book 852 at Page 552 and January 12, 1973 in Book 1738 at Page 93.
Additional area shown hereon located outside of "Block 97" was owned by the State Department of Highways as referenced in Right-of-Entry agreement per Book 2392, Page 103, and Book 2427, Page 971 of the Pueblo County Records. This area was included within the Special Warranty Deed recorded December 1, 2020 at Reception No. 2202722 of the Pueblo County Records and further evidenced by ALTA/NSPS Land Title Survey performed by Oliver E. Watts, Colo. PE-LS No. 9853 dated September 8, 2020.

APPROVAL

By: _____
Department of Planning & Community Development

By: _____
Director of Public Works

APPROVAL ATTESTED BY:

By: _____
Administrative Official

Date: _____

VICINITY MAP

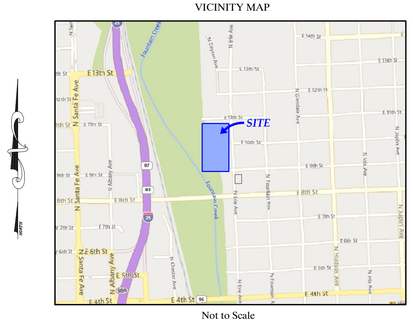

Not to Scale

N

SCALE: 1"=60'

0' 30' 60' 120'

- *I-2 – INDUSTRIAL DISTRICT*
- *I-3 – HEAVY INDUSTRIAL*
- *B-1 – NEIGHBORHOOD BUSINESS*
- *B-3 – HIGHWAY & ARTERIAL BUSINESS*
- *B-4 – CENTRAL BUSINESS DIST.*
- *R-2 – SINGLE FAMILY RESIDENTIAL*
- *R-4 – MIXED RESIDNTIAL*
- *S-1 – GOVERNMENT USE*
- *S-3 – FLOOD PLAIN DIST.*

Notice:
According to Colorado Law, you must commence any legal action based upon any defect in this survey within three (3) years after you first discover such defect. In no event, may any action based upon any defect in this survey be commenced more than ten (10) years from the date of certification shown hereon.

The area being affected by this REZONE REQUEST is 5.1 Ac. ±.

Colorado Land Surveyors, Inc.
184 S. Tiffany Dr., Ste. 106
Pueblo West, CO 81007
719-542-9169

D:\Civil 3D Projects\Surveys\2024\24-26 REZONE\24-26.dwg

city of PUEBLO colorado

Planning & Community Development

211 East D Street | Pueblo, Colorado 81003 | Tel 719-553-2259 | Fax 719-553-2359 | TTY 719-553-2611 | www.pueblo.us

Planning & Zoning Map Amendment Application (Rezoning)

Please type or print clearly. Illegible applications will not be accepted. Case #: _____

Property Owner	
Name: JOHN RODGERS	
Company: ZELL HOLDINGS, LLC	
Address: 2727 N CASCADE ACE, STE 127, CO SPRINGS, CO	Zip: 80907
Phone: ( ) 7192279987	Email: john.rodgers@peakcp.net
Applicant	
Name: Julie Troutt	
Company: COLORADO LAND SURVEYORS	
Address: 184 S. TIFFANY DR., STE 106, PUEBLO WEST, CO	Zip: 81007
Phone: ( ) 719-542-9169	Email: socolandsurvey@gmail.com
Person or Firm Representing (If Different From) Owner or Applicant	
Name: Julie Troutt	
Company: Colorado Land Surveyors	
Address:	Zip:
Phone: ( )	Email:
*The **applicant** will be the primary contact unless otherwise noted.*	

Project Location: 905 N. Erie Ave
(address or general description)

Parcel# 430320001, 430320002, 430320003, 430309001

Legal Description: Blocks 97 & 98, Conley's Addition to East Pueblo including vacated rights of way

Subdivision: Conley's Add to East Pueblo Acreage: 5.1 Ac

Existing Zone District: I-3, S-1, S-3	**Proposed Zone District:** I-3

7-29-20

Doc ID: 3750c70518eace2e7c847affe7ba7a8444fb80ce

Purpose of this Application:

- ☐ To permit development of the property not allowed under the existing zone district.
- ☐ To provide proper zone district in conjunction with the subdivision plan for the area.
- ☐ In conjunction with the Annexation petition to annex the property in a use different than the existing Pueblo County Zoning.
- ☑ Other (specify): To continue with the historic use of property. This property was owned by the State of Colorado and housed the Colorado Department of Transportation offices, vehicle maintenance and repair shops, heavy equipment maintenance and repair shops, heavy equipment storage facility, and records facility.

(Continued from previous page)

Statement of Facts:

Justifying the zone change request. Be specific; use additional sheets if necessary.

The property is currently a mixture of I-3 (Heavy Industrial), S-1 (Government Use), and S-3 (Floodplain Dist). and was historically CDOT headquarters. Owner wishes to continue with the historic use by utilizing the existing heavy equipment maintenance and repair shops, facilities, ware yard, and offices.

Description of area surrounding proposed development:

Surrounding properties include ACORN Petroleum including storage tanks for petroleum products, the previous CDOT and State Patrol offices across the street on Erie, vehicle storage yards, and misc. businesses and residences

A general description of the proposed development to the distance which will be affected; such description including subjects of environmental effect, economic effect and traffic effect, if any; and such description carried out in scope and detail to the extent needed to support the requested amendment and as may be required by the Planning and Zoning Commission.

Owner has no plans to erect any additional structures at this time. Repair/beautification to the existing buildings and facility will take place as needed.

☐ A tentative site plan showing proposed structures, uses, open spaces, facilities for parking and loading and arrangements for pedestrian and vehicular circulation.

Estimated date for beginning project:

Estimated date for completion of project:

A statement reasonably indicating the applicant's economic responsibility and capability of accomplishing the development for which a zoning amendment is requested.

☐ CD with DWF and DWG (Autocad) file of all plans and drawings & a PDF of all documents submitted. (**if applicable**)

By signing below, the Property Owner and Applicant are representing that each understands and agrees to the following terms:

1. Authorized personnel from the City of Pueblo, are hereby granted the right to enter the subject property for the purposes of reviewing and processing the application, including Certificate of Occupancy Inspections.

Office Use Only	Zoning Compliance (Completed by City Staff)	
	Application received by:	Date:
	Application checked for completeness by:	Date:
	Case Manager:	Fee Paid:
	Hearing date: ☐ Approved ☐ Denied ☐Approved w/conditions	

Doc ID: 3750c70518eace2e7c847affe7ba7a8444fb80ce

2. There are no known hazards or vicious animals present on the subject property.
3. All information contained in this application, is true and accurate to the best of my knowledge.
4. The City of Pueblo is under no obligation to approve the request contained in this application. No promises of approval are conveyed with the acceptance of this application.

Property Owner		
Print Name:	John Rodgers	
Signature:	John Rodgers	Date: 04 / 26 / 2024
Applicant, if different from Property Owner		
Print Name:	JULIE TROUTT	
Signature:	Julie Troutt	Date: 4-25-2024

Doc ID: 3750c70518eace2e7c847affe7ba7a8444fb80ce

Andra Ahrens
Wastewater Director

1300 S. Queens Ave
Pueblo, CO 81001

Phone (719) 553-2892
Fax (719) 553-2957

City of Pueblo Wastewater Department

MEMORANDUM

TO: Beritt Odom
FROM: Sonia Mondragon
DATE: August 23, 2024
SUBJECT: Z-24-07 905 N Erie Rezone 1St Submittal

This memo is intended to serve as the Wastewater Department's review of the referenced project submittal. Please forward to the applicant's representative.

Please provide a sanitary sewer flow comparison between the original zoning per and the proposed zoning.

August 23, 2024

The City Planning and Zoning Commission will hold a public hearing on request from **John Rodgers, Zell Holdings, LLC** for the approval of the following application:

Z-24-07: Rezone: Rezoning of 5.1 acres from S-1 and S-3, Government Use and Flood Plain Zone Districts to I-2 and I-3, Industrial Zone Districts. Generally located west of Erie Ave., east of Fountain Creek, and south of E. 11th Street.

The Planning and Zoning Commission meeting will be held on September 11, 2024, at 3:30 p.m., in City Council Chambers, 1 City Hall Place, Pueblo, CO. To view the meeting by Zoom: https://www.zoomgov.com/j/1603832441?pwd=oYGaUDZZfhYtMgcqpA7X0p2SJjWy3h.1
Meeting ID: 160 383 2441, Passcode: 911780, Telephone: 1 669 254 5252 US (San Jose). You are welcome to attend this public hearing, in person, to express your viewpoint concerning this proposal. To review the plans and staff report for the proposed application, please visit www.pueblo.us/PandZ and click on "Most Recent Agenda" no sooner than the Friday prior to the hearing. **Please contact the planner listed below if you have questions.**
Scott Hobson, Acting Director
Planning & Community Development
By **Beritt Odom**, Principal Planner
(719) 553-2339

August 23, 2024

The City Planning and Zoning Commission will hold a public hearing on request from **John Rodgers, Zell Holdings, LLC** for the approval of the following application:

Z-24-07: Rezone: Rezoning of 5.1 acres from S-1 and S-3, Government Use and Flood Plain Zone Districts to I-2 and I-3, Industrial Zone Districts. Generally located west of Erie Ave., east of Fountain Creek, and south of E. 11th Street.

The Planning and Zoning Commission meeting will be held on September 11, 2024, at 3:30 p.m., in City Council Chambers, 1 City Hall Place, Pueblo, CO. To view the meeting by Zoom: https://www.zoomgov.com/j/1603832441?pwd=oYGaUDZZfhYtMgcqpA7X0p2SJjWy3h.1
Meeting ID: 160 383 2441, Passcode: 911780, Telephone: 1 669 254 5252 US (San Jose). You are welcome to attend this public hearing, in person, to express your viewpoint concerning this proposal. To review the plans and staff report for the proposed application, please visit www.pueblo.us/PandZ and click on "Most Recent Agenda" no sooner than the Friday prior to the hearing. **Please contact the planner listed below if you have questions.**
Scott Hobson, Acting Director
Planning & Community Development
By **Beritt Odom**, Principal Planner
(719) 553-2339

August 23, 2024

The City Planning and Zoning Commission will hold a public hearing on request from **John Rodgers, Zell Holdings, LLC** for the approval of the following application:

Z-24-07: Rezone: Rezoning of 5.1 acres from S-1 and S-3, Government Use and Flood Plain Zone Districts to I-2 and I-3, Industrial Zone Districts. Generally located west of Erie Ave., east of Fountain Creek, and south of E. 11th Street.

The Planning and Zoning Commission meeting will be held on September 11, 2024, at 3:30 p.m., in City Council Chambers, 1 City Hall Place, Pueblo, CO. To view the meeting by Zoom: https://www.zoomgov.com/j/1603832441?pwd=oYGaUDZZfhYtMgcqpA7X0p2SJjWy3h.1
Meeting ID: 160 383 2441, Passcode: 911780, Telephone: 1 669 254 5252 US (San Jose). You are welcome to attend this public hearing, in person, to express your viewpoint concerning this proposal. To review the plans and staff report for the proposed application, please visit www.pueblo.us/PandZ and click on "Most Recent Agenda" no sooner than the Friday prior to the hearing. **Please contact the planner listed below if you have questions.**
Scott Hobson, Acting Director
Planning & Community Development
By **Beritt Odom**, Principal Planner
(719) 553-2339

August 23, 2024

The City Planning and Zoning Commission will hold a public hearing on request from **John Rodgers, Zell Holdings, LLC** for the approval of the following application:

Z-24-07: Rezone: Rezoning of 5.1 acres from S-1 and S-3, Government Use and Flood Plain Zone Districts to I-2 and I-3, Industrial Zone Districts. Generally located west of Erie Ave., east of Fountain Creek, and south of E. 11th Street.

The Planning and Zoning Commission meeting will be held on September 11, 2024, at 3:30 p.m., in City Council Chambers, 1 City Hall Place, Pueblo, CO. To view the meeting by Zoom: https://www.zoomgov.com/j/1603832441?pwd=oYGaUDZZfhYtMgcqpA7X0p2SJjWy3h.1
Meeting ID: 160 383 2441, Passcode: 911780, Telephone: 1 669 254 5252 US (San Jose). You are welcome to attend this public hearing, in person, to express your viewpoint concerning this proposal. To review the plans and staff report for the proposed application, please visit www.pueblo.us/PandZ and click on "Most Recent Agenda" no sooner than the Friday prior to the hearing. **Please contact the planner listed below if you have questions.**
Scott Hobson, Acting Director
Planning & Community Development
By **Beritt Odom**, Principal Planner
(719) 553-2339

CASE NUMBER: Z-24-07

CERTIFICATION

I hereby certify that I did this day cause written notice of the public hearing on the proposed Zoning Map Amendment of the property located at 905 N. Erie Ave. to be sent to the attached list of owners of the real property lying within three hundred (300) feet of the said property on which the Zoning Map Amendment is proposed by depositing the same properly addressed and postage paid in the post office, as set forth in the Code of Ordinances, Section 17-6-2.

August 23, 2024

(Date)

PUEBLO PLANNING & ZONING COMMISSION

By: Cindy Capuchin

I hereby certify that I did this day verify and photograph the posted notice of the public hearing on the Zoning Map Amendment of the property located at 905 N. Erie Ave. upon which action is pending as set forth in the Code of Ordinances, Section 17-6-2.

August 23, 2024

(Date)

PUEBLO PLANNING & ZONING COMMISSION

By: Cindy Capuchin

Owner	OwnerStree	OwnerCity	Owr	OwnerZip
WOODARD DALE/WOODARD KARLA FAMILY	1151 FOUR MILE LN	CANON CIT	CO	81212-9121
FAJARDO GREG	122 W ROUTT AVE APT 1	PUEBLO	CO	81004-2071
TRENT KERRELYN M	1318 PASEO DEL NORTE	PUEBLO	CO	81008-2023
CORDOVA BRUCE D/CORDOVA LORRAINE	1436 E 14TH ST	PUEBLO	CO	81001-3135
KINGDOM HOME INVESTORS LLC	15965 E 97TH AVE	COMMERC	CO	80022-9103
MARINO CARL M	220 W 15TH ST APT 803	PUEBLO	CO	81003-3721
GHINI AARON G	2371 OVERTON RD	PUEBLO	CO	81008-9676
ZELL HOLDINGS LLC	2727 N CASCADE AVE STE	COLORADC	CO	80907-6288
KELZER RAYMOND G/KELZER RYSZARDA	31600 DANIEL RD	PUEBLO	CO	81006-9589
HANNAH MATTHEW	3614 DILLEY CIR	JOHNSTOW	CO	80534-9435
STATE HIGHWAY COMMISSION	4201 E ARKANSAS AVE	DENVER	CO	80222-3406
GARIBAY JOSHUA	4465 BORDEN DR	COLORADC	CO	80911-3240
VIGIL YOUNG KAREN J	506 E 12TH ST	PUEBLO	CO	81001-2935
MEININGER GARY W	507 E 11TH ST	PUEBLO	CO	81001-2928
STATE OF COLO/GOVERNOR'S OFFICE OF	601 E 18TH AVE STE 210	DENVER	CO	80203-1494
HINKLE PROPERTIES LLC	601 E 8TH ST	PUEBLO	CO	81001-3528
MEYERS GREGORY ALAN	604 E 10TH ST	PUEBLO	CO	81001-2909
BLOCKER RANDY/BLOCKER FRANCES ANN	605 E 11TH ST	PUEBLO	CO	81001-2930
TREMBLY VIRGIL L	606 E 10TH ST	PUEBLO	CO	81001-2909
MATA FRANCES/GONZALES ELIJAH F	607 E 11TH ST	PUEBLO	CO	81001-2930
CRUZ JUANITA ANDREA	608 E 11TH ST	PUEBLO	CO	81001-2931
DETURCK BRADFORD DANIEL	610 E 10TH ST	PUEBLO	CO	81001-2909
BORREGO ROBERT C	616 E 10TH ST	PUEBLO	CO	81001-2909
ALFONSO CHRISTIAN T/ ALFONSO JEFF	616 E 11TH ST	PUEBLO	CO	81001-2931
STEWART BRITTANY	618 E 9TH ST	PUEBLO	CO	81001-2903
PRINTZ THOMAS L	63 MACALESTER RD	PUEBLO	CO	81001-2052
MAIN ELECTRIC LTD	653 E ENTERPRISE	PUEBLO W	CO	81007
OAK TREE REAL ESTATE LLC	6547 N ACADEMY BLVD U	COLORADC	CO	80918-8342
ACORN PETROLEUM INC	76 S SIERRA MADRE ST	COLORADC	CO	80903-3309
HURT HARLEAN	PO BOX 11951	PUEBLO	CO	81001-0951
MORENO VERONICA	PO BOX 2151	PUEBLO	CO	81004-0151